Level | Pressure | Flow | Temperature | Liquid Analysis | Registration | Systems Components | Services | Solutions

Technical Information

Rod probe 11961Z

Conductive level limit detection
Partially insulated rod probe for use in conductive liquids



Application

- Conductive level limit detection in process or storage tanks for all kinds of liquids:
  - for conductivity as of 0.02 mS/cm
  - for temperatures from –200 °C to 250 °C
  - for pressures from –1 to 160 bar
- As overfill protection with line monitoring even in Ex-area Zone 0
- For minimum or maximum detection in tanks
- As pump protection in pipes
- As capacitive probe, e.g. for overfill protection
- Can be used for two-point control

Your benefits

- For aggressive medium thanks to corrosion-resistant materials for rod and insulation
- Can be used in steam boilers thanks to ceramic insulation resistant to steam and hot water
- Can be deployed particularly with high pressure or vacuum
- Subsequent probe length shortening possible
- WHG (German Water Resources Act) + ATEX II 1/2 G approval
- Can be connected to separate switching units FTW325, FTW470Z, FTW570Z, FTC325, FTC625
- Safety thanks to line monitoring
- Long operating life and reliable function without wear since no moving parts in the tank

TI325F/00/EN/05.10
71115356

Endress+Hauser
People for Process Automation

Table of contents

Function and system design 3
Measuring principle 3
Measuring system 3

Input 4
Measured variable 4
Measuring range (detection range) 4
Input signal 4

Output 4
Switching units 4
Output signal 4
Line monitoring 4

Power supply 5
Electrical connection 5
Cable entry 5
Cable specifications 5

Operating conditions 6

Installation 6
Installation instructions 6
Shortening probe rod 6
Mounting in piping 7

Environment 7
Ambient temperature range 7
Storage temperature 7
Degree of protection 7
Electromagnetic compatibility 7

Process 8
Medium temperature range 8
Medium temperature limits 8
Conductivity 8
Limiting medium pressure range 8

Mechanical construction 9
Design, dimensions 9
Weight 9
Wetted materials 9
Fitted electrodes 10

Certificates and approvals 10
CE mark 10
Overfill protection 10
Type of protection (ATEX) 10

Ordering information 11
Rod probe 11961Z 11

Documentation 12
Technical Information 12
Operating Instructions 12
Certificates 12

Function and system design

Measuring principle

Alternating voltage is supplied to the probe by means of a transmitter (e.g. Nivotester FTW325). As soon as the conductive liquid forms a connection to the partition and the sensor, a measurable current flows which causes the sensor to switch.
The use of alternating voltage prevents corrosion on the probe rod and electrolytic corrosion of the medium.

Measuring system

11961Z probe in the liquid tank, Nivotester FTW or FTC level limit switch in the control room

The measuring device consists of:

- At least one 11961Z probe
- A switching unit (e.g. FTW325 or FTC625)
- Controllers, switch transmitters or signal transmitters, e.g. process control systems PLC, relays etc.

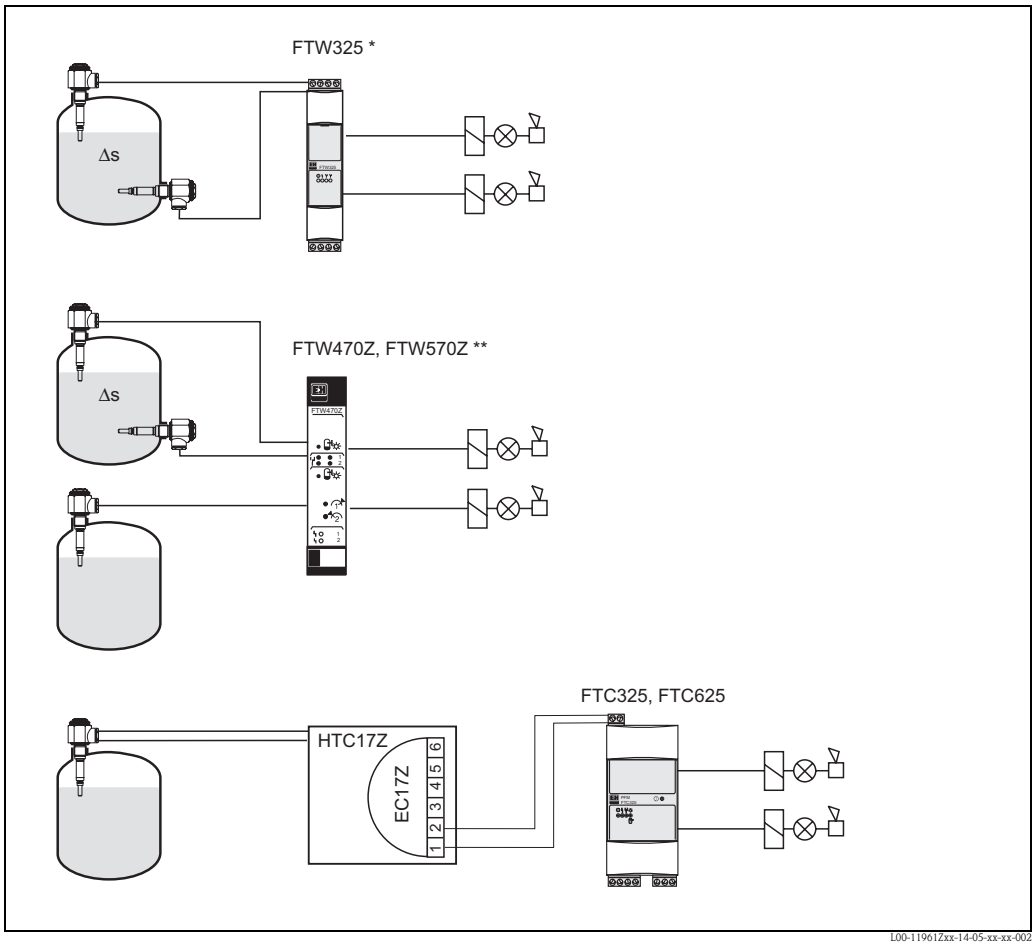

L00-11961Zxx-14-05-xx-xx-002

* *For two independent level limits or a two-point control (Δs)*
** *For two independent level limits or two two-point controls independent of one another (Δs) or one level limit and one two-point control (Δs)*

FTW470Z/570Z: Phase-out 2006
HTC17Z: Phase-out 2007

Input

Measured variable

Change in resistance between tank wall and probe rod caused by presence/absence of conductive product (limit value, binary).

Measuring range (detection range)

The measuring range depends on the probe mounting location.
The probes can be max. 2000 mm long.

Input signal

Probe covered => A measurable current flows between the probe rod and tank wall
Probe not covered => A measurable current does not flow between the probe rod and tank wall

Output

Switching units

Nivotester FTW325, FTW470Z*, FTW570Z*, FTC325, FTC625

* Phase-out: 2006

Output signal

Relay output with floating change-over contacts for level alarms;
For more information, see Nivotester FTW325, FTW470Z, FTW570Z, FTC325 or FTC625; Technical Information

Line monitoring

An additional printed circuit board for line monitoring is installed in the housing for probes with WHG approval. It is always switched or connected between the rod and housing wall.



Note!
It has to be removed if using switching units (transmitters) that do not support line monitoring.
With Nivotester FTC325 and FTC625, line monitoring only takes place via the PFM signal.

Power supply

Electrical connection

Standard + ATEX: 2 terminals for core cross-section to 2.5 mm^2 in housing
WHG (with line monitoring): 2 threaded connections for cable lug in housing with 2 m captive cable

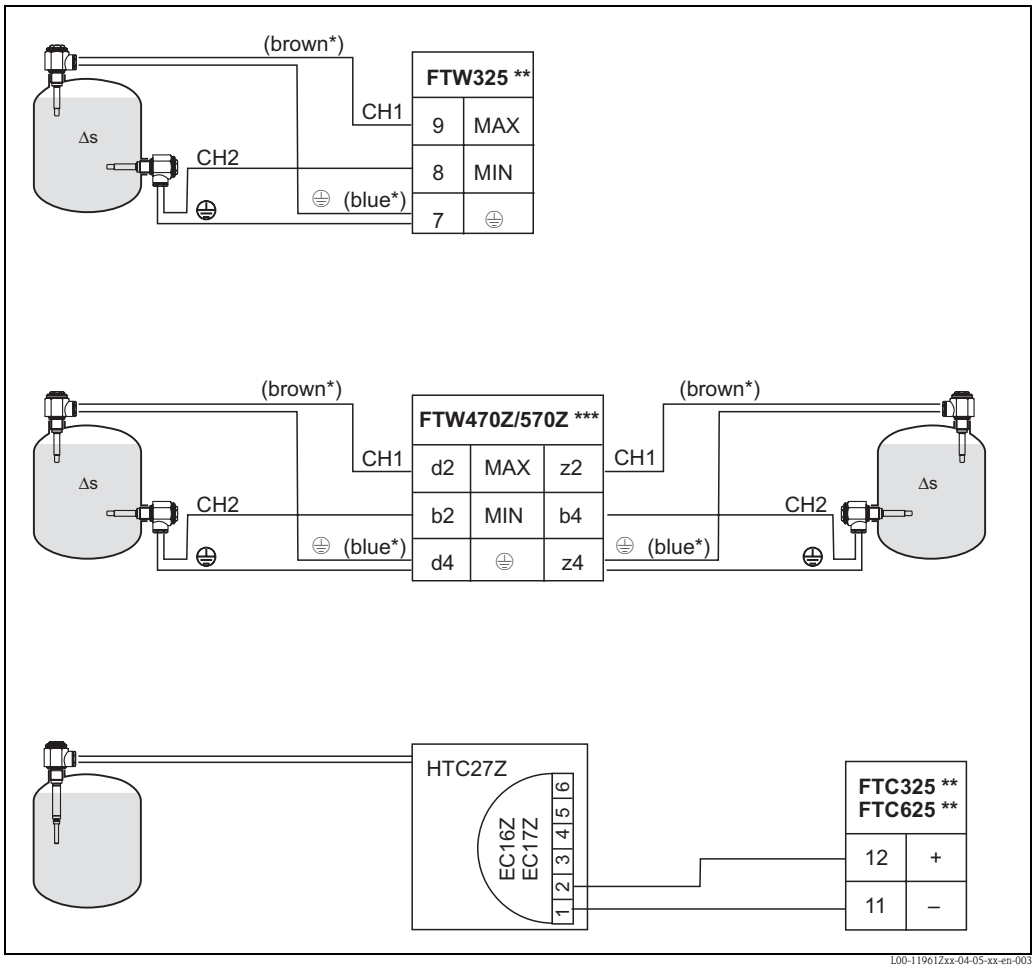

* *With line monitoring*
** *For two independent level limits or a two-point control (Δs)*
*** *For two independent level limits or two two-point controls independent of one another (Δs) or one level limit and one two-point control (Δs)*

FTW470Z/570Z: Phase-out 2006
HTC27Z: Phase-out 2007

Cable entry

The cable gland Pg16 is suitable for cable diameters from 7 to 12 mm^2.

Connect cores preferably with insulated cable lugs to the connections in the probe housing:
- central connection for the probe rod,
- lateral connection for the earth.

A 2 m captive twin-core cable is supplied for line monitoring.

Cable specifications

Use usual commercial cable (25 Ω per core).
The connecting cable must comply with the requirements at the place of deployment.

Use a screened cable in the event of strong electromagnetic radiation.

Operating conditions

Installation

Installation instructions

Mounting location

Preferably vertical from above.
In the case of lateral mounting, mount the probes with the tip of the probe pointing slightly downwards.

Orientation

Level limit detection for standard applications in metal tanks.

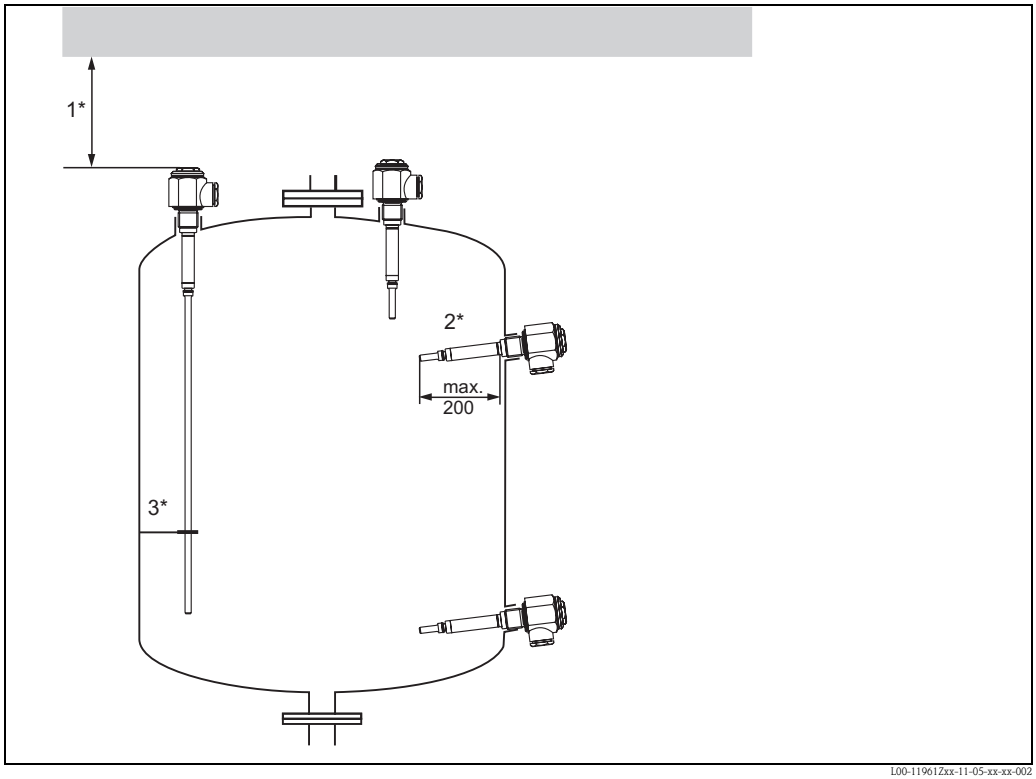

1 Sufficient clearance provided outside the tank so the probe can be inserted without the application of force.*
2 A short probe (maximum length 200 mm) can also be installed laterally, preferably with the tip of the probe pointing slightly downwards, so that the liquid can drain off better and conductive build-up does not form.*
3 If used in agitated liquids, probes over 0.5 m in length must be laterally supported by insulated brackets.*

Shortening probe rod

The probe can be shortened to any length.

Note!
- Do not damage the insulation at any other point
- After shortening, remove insulation over at least 20 mm at the tip of the probe
- No mechanical strain may be put on the probe when shortening the probe rod

Mounting in piping

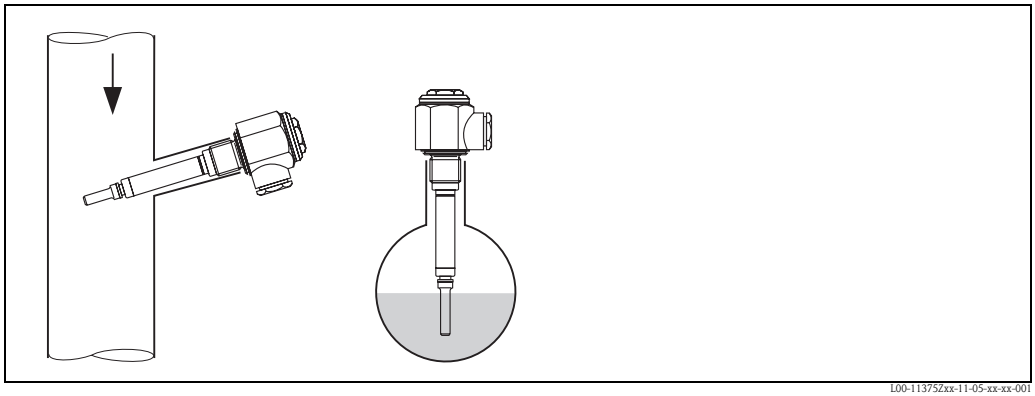

L00-11375Zxx-11-05-xx-xx-001

Environment

Ambient temperature range

Depends on the fluid temperature (limited through permitted interior temperatures of the connection housing)

Permitted interior temperatures of the connection housing:

Standard: –200 °C…+250 °C, depends on the connecting cable
ATEX: –200 °C…+200 °C, depends on the connecting cable
WHG: – 20 °C…+ 65 °C in housing; take fluid temperature into account!

Storage temperature

–200 °C…+250 °C
– 20 °C…+ 65 °C (with line monitoring)

Degree of protection

IP55 as per EN 60529

Electromagnetic compatibility

For interference emission and interference immunity, see connected Nivotester FTW or FTC limit switch
EMC test procedures, see TI241F/00/EN

Process

Medium temperature range

Standard: –200 °C…+250 °C, depends on the connecting cable
ATEX: –200 °C…+200 °C, depends on application (capacitive/conductive), see certificate
WHG: – 20 °C…+ 65 °C (with line monitoring)

Connection between fluid temperature and interior temperature of the connection housing depending on ambient temperature:

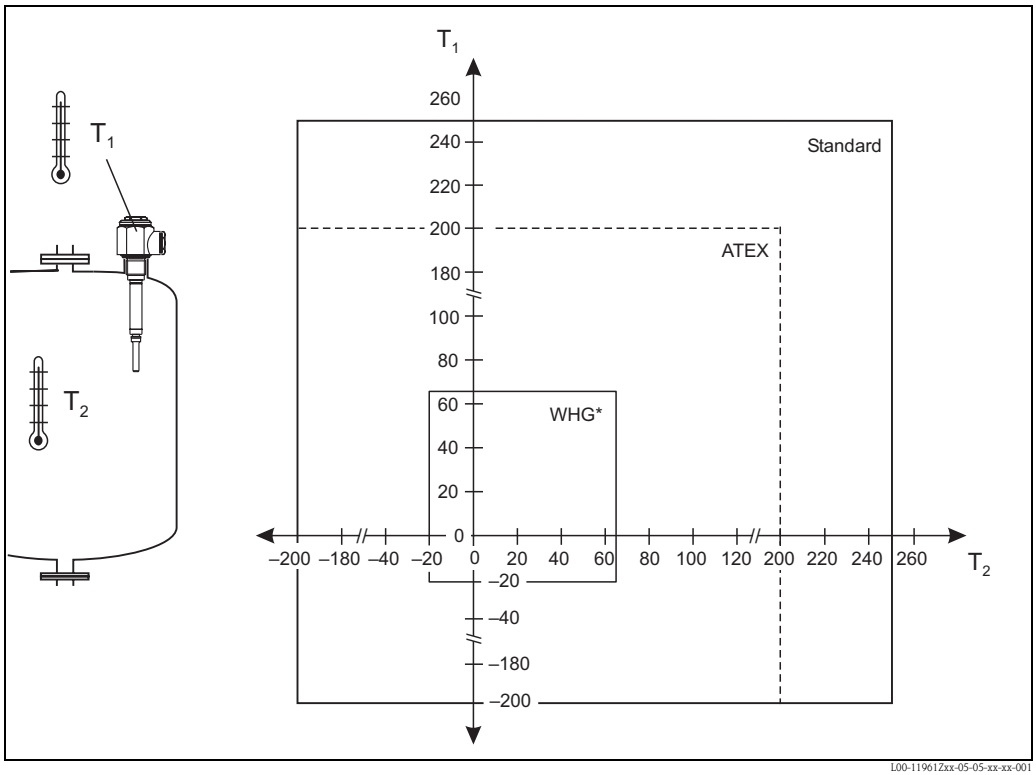

** With line monitoring*

Medium temperature limits

As above

Conductivity

Min. 0.02 mS/cm, see limit switch connected

Limiting medium pressure range

Standard: Line pressure pe 160 bar, see graphic
ATEX + WHG: Note explosion protection directives and information in the certificates

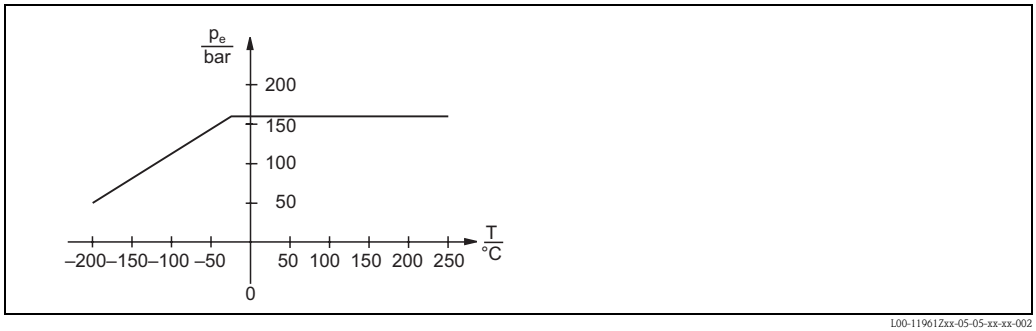

Mechanical construction

Note!
All dimensions in mm

Design, dimensions

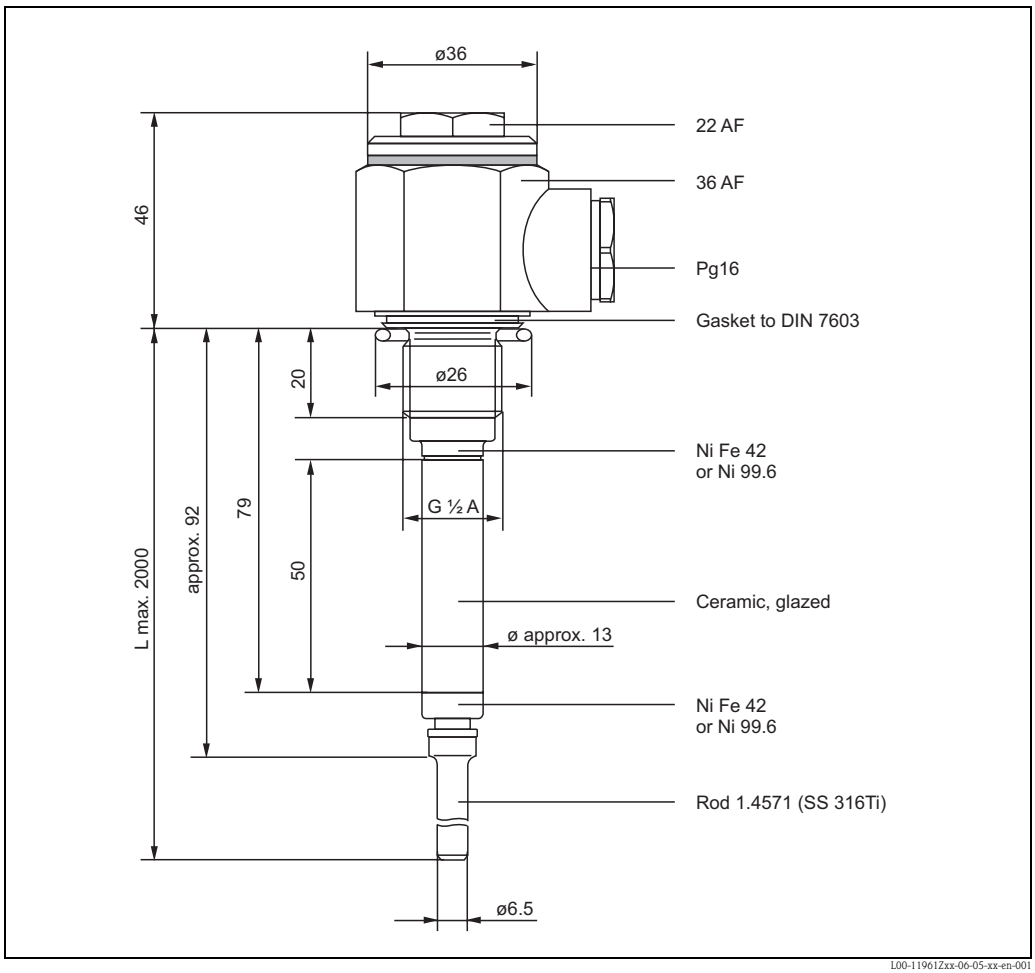

Note!
Length of partial insulation min. 20 mm shorter than the probe length.
Please indicate the desired probe length in mm when ordering.

Weight

Rod 1 m in length

500 g

Wetted materials

Probe rod

Corrosion-resistant steel 316Ti (1.4571)

Process connections

Corrosion-resistant steel 316Ti (1.4571)

Partial insulation

Glazed ceramic

Surround for partial insulation

Ni Fe 42 or Ni 99.6

Seal

Corrosion-resistant steel

Fitted electrodes

Rod probe

- Diameter without insulation: 6.5 mm
- Maximum rod length: 2000 mm
- Minimum rod length: 100 mm
- Length of non-insulated area (tip of rod): min. 20 mm

Certificates and approvals

CE mark

The device is in conformity with the statutory requirements of the EC Directives.
Endress+Hauser confirms that the device has been tested successfully by applying the CE mark.

Overfill protection

WHG (German Water Resources Act)

Type of protection (ATEX)

Conductive

- EC type-examination certificate TÜV 02 ATEX 1951 X

Capacitive

- EC type-examination certificate PBT 98 ATEX 2215 X

Ordering information

Rod probe 11961Z

10	**Approval**							
	A	ATEX II 1/2 G EEx ia IIC T6, WHG						
	P	ATEX II 1/2 G EEx ia IIC T6						
	R	Non-hazardous area						
	S	Non-hazardous area, WHG						
	Y	Special version						
	2	ATEX II 1/2 G EEx ia IIB T6, WHG						
	3	ATEX II 1/2 G EEx ia IIB T6						
20		**Application ***						
	C	FTC470Z, FTC471Z						
	R	FTW325						
	S	FTC325, FTC625						
	X	Non-specified switching unit						
	Y	Special version						
30			**Process connection, material**					
	G1	Thread ISO228 G ½ A, 316Ti						
	Y9	Special version						
40				**Metal parts at ceramic**				
	A	Ni Fe 42						
	B	Ni 99.6						
	Y	Special version						
50					**Rod material**			
	B	Rod 316Ti						
	Y	Special version						
60						**Length of probe L**		
	1	..... mm	L, can be shortened					
	2	500 mm	L, can be shortened					
	3	1000 mm	L, can be shortened					
	5	..... inch	L, can be shortened					
	6	20 inch	L, can be shortened					
	7	39 inch	L, can be shortened					
	9	Special version						
995							**Marking**	
	1	Tagging (TAG)						
11961Z								complete product designation

* The device designation is required to assign the suitable certificate (conductive or capacitive) to the application. Only the conductive certificate is supplied with version X.
Due to space restrictions, the device names of the switching units are not illustrated on the nameplate.

Documentation

Technical Information

- Nivotester FTW325
  TI373F/00/EN
- Nivotester FTC325
  TI380F/00/EN
- Nivotester FTC625
  TI370F/00/EN

Operating Instructions

- Rod probe 11961Z
  KA241F/00/A6
- Nivotester FTW325
  KA199F/00/A6
- Nivotester FTC325PFM
  KA221F/00/A6
- Nivotester FTC625
  KA194F/00/A6

Certificates

General construction supervision approval

- Conductive level limit detection
  ZE043F/00/DE
- Capacitive level measurement
  ZE210F/00/DE
- Capacitive level limit detection
  ZE211F/00/DE

Safety instructions (ATEX)

- Conductive level limit detection
  XA197F/00/A3
- Capacitive level limit detection + level measurement
  XA024F/00/A3

Instruments International

Endress+Hauser
Instruments International AG
Kaegenstrasse 2
4153 Reinach
Switzerland

Tel. +41 61 715 81 00
Fax +41 61 715 25 00
www.endress.com
info@ii.endress.com

Endress+Hauser

People for Process Automation

TI325F/00/EN/05.10
71115356
CCS/FM+SGML 6.0

71115356