Level | Pressure | Flow | Temperature | Liquid Analysis | Registration | Systems Components | Services | Solutions

Technical Information

Proline Promag 50W, 53W

Electromagnetic Flow Measuring System
Flow measurement of liquids in water or wastewater applications



Application

Electromagnetic flowmeter for bidirectional measurement of liquids with a minimum conductivity of ≥ 5 µS/cm:
- Drinking water
- Wastewater
- Sewage sludge

- Flow measurement up to 110000 m³/h (484315 gal/min)
- Fluid temperature up to +80 °C (+176 °F)
- Process pressures up to 40 bar (580 psi)
- Lengths in accordance with DVGW/ISO

Application-specific lining of the measuring pipe from polyurethane or hard rubber with the following drinking water permissions:
- KTW
- WRAS
- NSF
- ACS

Approvals for hazardous area:
- ATEX
- IECEx
- FM
- CSA
- NEPSI

Connection to process control system:
- HART
- PROFIBUS DP/PA
- FOUNDATION Fieldbus
- MODBUS RS485

Your benefits

Promag measuring devices offer you cost-effective flow measurement with a high degree of accuracy for a wide range of process conditions.

The uniform Proline transmitter concept comprises:
- Modular device and operating concept resulting in a higher degree of efficiency
- Software options for batching, electrode cleaning and for measuring pulsating flow
- High degree of reliability and measuring stability
- Uniform operating concept

The tried-and-tested Promag sensors offer:
- No pressure loss
- Not sensitive to vibrations
- Simple installation and commissioning

TI046D/24/en/07.10

Endress+Hauser

People for Process Automation

Table of contents

Function and system design 3
Measuring principle 3
Measuring system 3

Input 4
Measured variable 4
Measuring ranges 4
Operable flow range 4
Input signal 4

Output 4
Output signal 4
Signal on alarm 6
Load 6
Low flow cutoff 6
Galvanic isolation 6
Switching output 6

Power supply 7
Electrical connection, measuring unit 7
Electrical connection, terminal assignment 8
Electrical connection, remote version 9
Supply voltage (power supply) 9
Cable entry 9
Remote version cable specifications 9
Power consumption 10
Power supply failure 10
Potential equalization 11

Performance characteristics 13
Reference operating conditions 13
Maximum measured error 13
Repeatability 13

Operating conditions: Installations 14
Installation instructions 14
Inlet and outlet run 18
Adapters 18
Length of connecting cable 19

Operating conditions: Environment 20
Ambient temperature range 20
Storage temperature 20
Degree of protection 20
Shock and vibration resistance 20
Electromagnetic compatibility (EMC) 20

Operating conditions: Process 21
Medium temperature range 21
Conductivity 21
Medium pressure range (nominal pressure) 21
Pressure tightness 21
Limiting flow 22
Pressure loss 23

Mechanical construction 24
Design, dimensions 24
Weight 37
Measuring tube specifications 39
Material 40
Material load diagram 40
Fitted electrodes 43
Process connections 43
Surface roughness 43

Human interface 43
Display elements 43
Operating elements 43
Language groups 43
Remote operation 43

Certificates and approvals 44
CE mark 44
C-tick mark 44
Pressure measuring device approval 44
Ex approval 44
Other standards and guidelines 44
FOUNDATION Fieldbus certification 44
MODBUS RS485 certification 44
PROFIBUS DP/PA certification 44

Accessories 45

Documentation 45

Registered trademarks 46

Order Codes 47

Function and system design

Measuring principle

Following Faraday's law of magnetic induction, a voltage is induced in a conductor moving through a magnetic field.
In the electromagnetic measuring principle, the flowing medium is the moving conductor.
The voltage induced is proportional to the flow velocity and is supplied to the amplifier by means of two measuring electrodes. The flow volume is calculated by means of the pipe cross-sectional area.
The DC magnetic field is created through a switched direct current of alternating polarity.

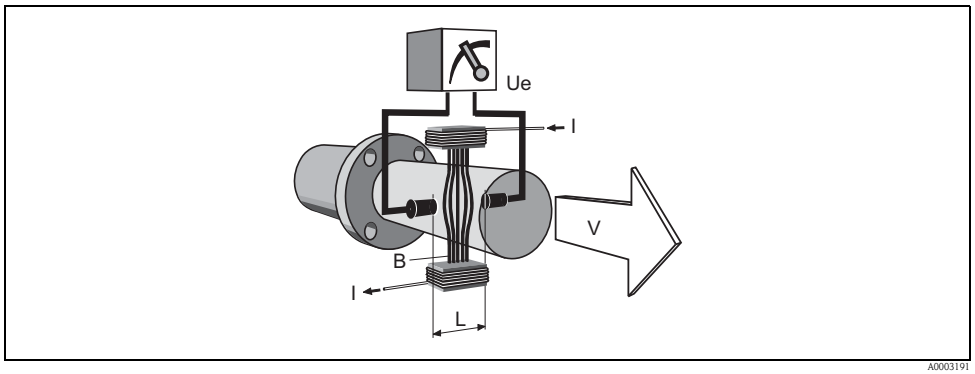

A0003191

$Ue = B \cdot L \cdot v$
$Q = A \cdot v$

Ue	Induced voltage
B	Magnetic induction (magnetic field)
L	Electrode spacing
v	Flow velocity
Q	Volume flow
A	Pipe cross-section
I	Current strength

Measuring system

The measuring system consists of a transmitter and a sensor.
Two versions are available:
- Compact version: Transmitter and sensor form a mechanical unit.
- Remote version: Sensor is mounted separate from the transmitter.

Transmitter:
- Promag 50 (user interface with push buttons for operation, two-line display, illuminated)
- Promag 53 ("Touch Control" without opening the housing, four-line display, unilluminated)

Sensor:
- Promag W (DN 25 to 2000 / 1 to 78")

Input

Measured variable

Flow velocity (proportional to induced voltage)

Measuring ranges

Measuring ranges for liquids
Typically v = 0.01 to 10 m/s (0.03 to 33 ft/s) with the specified accuracy

Operable flow range

Over 1000 : 1

Input signal

Status input (auxiliary input)
- U = 3 to 30 V DC, R_i = 5 kΩ, galvanically isolated
- Configurable for: totalizer(s) reset, measured value suppression, error-message reset

Status input (auxiliary input) with PROFIBUS DP and MODBUS RS485
- U = 3 to 30 V DC, R_i = 3 kΩ, galvanically isolated
- Switching level: 3 to 30 V DC, independent of polarity
- Configurable for: totalizer(s) reset, measured value suppression, error-message reset, batching start/stop (optional), batch totalizer reset (optional)

Current input (only Promag 53)
- active/passive selectable, galvanically isolated, full scale value selectable, resolution: 3 µA, temperature coefficient: typ. 0.005% o.r./°C (o.r. = of reading)
- active: 4 to 20 mA, $R_i \leq 150$ Ω, max. 24 V DC, short-circuit-proof
- passive: 0/4 to 20 mA, $R_i < 150$ Ω, max. 30 V DC

Output

Output signal

Promag 50

Current output
active/passive selectable, galvanically isolated, time constant selectable (0.01 to 100 s), full scale value selectable, temperature coefficient: typ. 0.005% o.r./°C (o.r. = of reading), resolution: 0.5 µA
- active: 0/4 to 20 mA, $R_L < 700$ Ω (HART: $R_L \geq 250$ Ω)
- passive: 4 to 20 mA, operating voltage V_S: 18 to 30 V DC, $R_i \geq 150$ Ω

Pulse/frequency output
passive, open collector, 30 V DC, 250 mA, galvanically isolated
- Frequency output: full scale frequency 2 to 1000 Hz (f_{max} = 1250 Hz), on/off ratio 1:1, pulse width max. 10s
- Pulse output: pulse value and pulse polarity selectable, max. pulse width configurable (0.5 to 2000 ms)

PROFIBUS DP interface
- Transmission technology (Physical Layer): RS485 in accordance with ANSI/TIA/EIA-485-A: 1998, galvanically isolated
- Profil version 3.0
- Data transmission rate: 9,6 kBaud to 12 MBaud
- Automatic data transmission rate recognition
- Function blocks: 1 × analog Input, 1 × totalizer
- Output data: volume flow, totalizer
- Input data: positive zero return (ON/OFF), totalizer control, value for local display
- Cyclic data transmission compatible with previous model Promag 33
- Bus address adjustable via miniature switches or local display (optional) at the measuring device

PROFIBUS PA interface
- Transmission technology (Physical Layer): IEC 61158-2 (MBP), galvanically isolated
- Profil version 3.0
- Current consumption: 11 mA
- Permissible supply voltage: 9 to 32 V
- Bus connection with integrated reverse polarity protection
- Error current FDE (Fault Disconnection Electronic): 0 mA
- Function blocks: 1 × analog input, 2 × totalizer
- Output data: volume flow, totalizer
- Input data: positive zero return (ON/OFF), control totalizer, value for local display
- Cyclic data transmission compatible with previous model Promag 33
- Bus address adjustable via miniature switches or local display (optional) at the measuring device

Promag 53

Current output
active/passive selectable, galvanically isolated, time constant selectable (0.01 to 100 s),
full scale value selectable, temperature coefficient: typ. 0.005% o.r./°C (o.r. = of reading), resolution: 0.5 µA
- active: 0/4 to 20 mA, $R_L < 700\ \Omega$ (HART: $R_L \geq 250\ \Omega$)
- passive: 4 to 20 mA, operating voltage V_S: 18 to 30 V DC, $R_i \geq 150\ \Omega$

Pulse/frequency output
active/passive selectable, galvanically isolated (Ex i version: only passive)
- active: 24 V DC, 25 mA (max. 250 mA during 20 ms), $R_L > 100\ \Omega$
- passive: open collector, 30 V DC, 250 mA
- Frequency output: full scale frequency 2 to 10000 Hz (f_{max} = 12500 Hz), EEx-ia: 2 to 5000 Hz; on/off ratio 1:1, pulse width max. 10 s
- Pulse output: pulse value and pulse polarity selectable, max. pulse width configurable (0.05 to 2000 ms)

PROFIBUS DP interface
- Transmission technology (Physical Layer): RS485 in accordance with ANSI/TIA/EIA-485-A: 1998, galvanically isolated
- Profil version 3.0
- Data transmission rate: 9,6 kBaud to 12 MBaud
- Automatic data transmission rate recognition
- Function blocks: 2 × analog Input, 3 × totalizer
- Output data: volume flow, calculated mass flow, totalizer 1 to 3
- Input data: positive zero return (ON/OFF), totalizer control, value for local display
- Cyclic data transmission compatible with previous model Promag 33
- Bus address adjustable via miniature switches or local display (optional) at the measuring device
- Available output combination → 8

PROFIBUS PA interface
- Transmission technology (Physical Layer): IEC 61158-2 (MBP), galvanically isolated
- Profil version 3.0
- Current consumption: 11 mA
- Permissible supply voltage: 9 to 32 V
- Bus connection with integrated reverse polarity protection
- Error current FDE (Fault Disconnection Electronic): 0 mA
- Function blocks: 2 × analog input, 3 × totalizer
- Output data: volume flow, calculated mass flow, totalizer 1 to 3
- Input data: positive zero return (ON/OFF), totalizer control, value for local display
- Cyclic data transmission compatible with previous model Promag 33
- Bus address adjustable via miniature switches or local display (optional) at the measuring device

MODBUS RS485 interface
- Transmission technology (Physical Layer): RS485 in accordance with ANSI/TIA/EIA-485-A: 1998, galvanically isolated
- MODBUS device type: Slave
- Adress range: 1 to 247
- Bus address adjustable via miniature switches or local display (optional) at the measuring device
- Supported MODBUS function codes: 03, 04, 06, 08, 16, 23
- Broadcast: supported with the function codes 06, 16, 23
- Übertragungsmodus: RTU oder ASCII
- Supported baudrate: 1200, 2400, 4800, 9600, 19200, 38400, 57600, 115200 Baud
- Response time:
  - Direct data access = typically 25 to 50 ms
  - Auto-scan buffer (data range) = typically 3 to 5 ms
- Available output combination → 8

FOUNDATION Fieldbus interface
- FOUNDATION Fieldbus H1
- Transmission technology (Physical Layer): IEC 61158-2 (MBP), galvanically isolated
- ITK version 5.01
- Current consumption: 12 mA
- Error current FDE (Fault Disconnection Electronic): 0 mA
- Bus connection with integrated reverse polarity protection
- Function blocks:
  - 5 × Analog Input (execution time: 18 ms each)
  - 1 × PID (25 ms)
  - 1 × Digital Output (18 ms)
  - 1 × Signal Characterizer (20 ms)
  - 1 × Input Selector (20 ms)
  - 1 × Arithmetic (20 ms)
  - 1 × Integrator (18 ms)
- Output data: volume flow, calculated mass flow, temperature, totalizer 1 to 3
- Input data: positive zero return (ON/OFF), reset totalizer
- Link Master (LM) functionality is supported

Signal on alarm
- Current output → failure response selectable (e.g. in accordance with NAMUR recommendation NE 43)
- Pulse/frequency output → failure response selectable
- Status output (Promag 50) → non-conductive by fault or power supply failure
- Relay output (Promag 53) → de-energized by fault or power supply failure

Load

see "Output signal"

Low flow cutoff

Switch points for low flow cutoff are selectable.

Galvanic isolation

All circuits for inputs, outputs and power supply are galvanically isolated from each other.

Switching output

Status output (Promag 50, Promag 53)
Open collector, max. 30 V DC / 250 mA, galvanically isolated.
Configurable for: error messages, Empty Pipe Detection (EPD), flow direction, limit values.

Relay outputs (Promag 53)
Normally closed (NC or break) or normally open (NO or make) contacts available
(default: relay 1 = NO, relay 2 = NC), max. 30 V / 0,5 A AC ; 60 V / 0,1 A DC, galvanically isolated.
Configurable for: error messages, Empty Pipe Detection (EPD), flow direction, limit values, batching contacts.

Power supply

Electrical connection, measuring unit

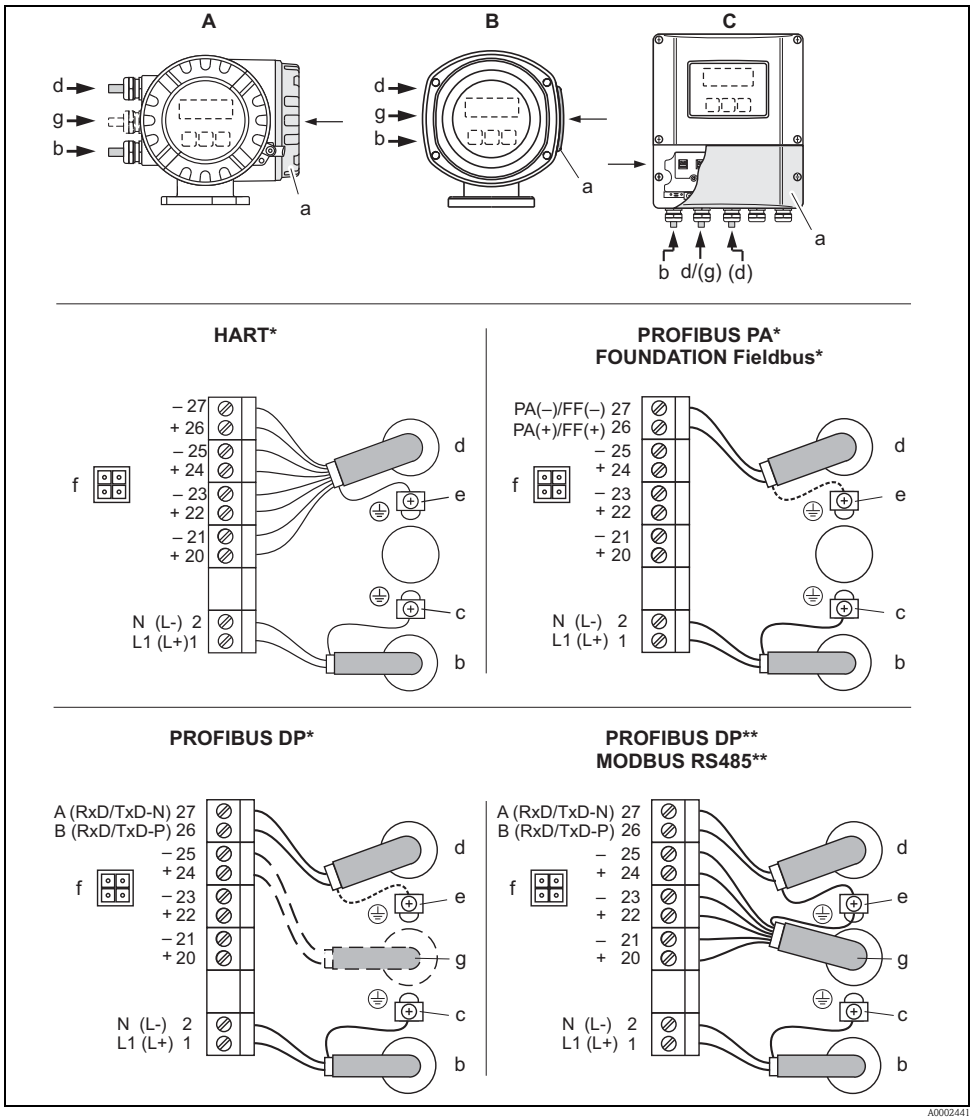

Connecting the transmitter, cable cross-section max. 2.5 mm^2 (14 AWG)

A View A (field housing)
B View B (stainless steel field housing)
C View C (wall-mount housing)

*) fixed communication boards
**) flexible communication boards
a Connection compartment cover
b Cable for power supply: 85 to 260 V AC / 20 to 55 V AC / 16 to 62 V DC
- Terminal No. 1: L1 for AC, L+ for DC
- Terminal No. 2: N for AC, L– for DC

c Ground terminal for protective conductor
d Signal cable: see "Electrical connection, terminal assignment" → 8
Fieldbus cable:
- Terminal No. 26: DP (B) / PA + / FF + / MODBUS RS485 (B) / (PA, FF: with polarity protection)
- Terminal No. 27: DP (A) / PA – / FF – / MODBUS RS485 (A) / (PA, FF: with polarity protection)

e Ground terminal for signal cable shield / Fieldbus cable / RS485 line
f Service adapter for connecting service interface FXA193 (Fieldcheck, FieldCare)
g Signal cable: see "Electrical connection, terminal assignment" → 8
Cable for external termination (only for PROFIBUS DP with fixed assignment communication board):
- Terminal No. 24: +5 V
- Terminal No. 25: DGND

Electrical connection, terminal assignment

Terminal assignment, Promag 50

Order variant	Terminal No. (inputs/outputs)			
	20 (+) / 21 (–)	22 (+) / 23 (–)	24 (+) / 25 (–)	26 (+) / 27 (–)
50***-**********W	–	–	–	Current output HART
50***-**********A	–	–	Frequency output	Current output HART
50***-**********D	Status input	Status output	Frequency output	Current output HART
50***-**********H	–	–	–	PROFIBUS PA
50***-**********J	–	–	+5 V (external termination)	PROFIBUS DP
50***-**********S	–	–	Frequency output, Ex i, passive	Current output, Ex i, passive, HART
50***-**********T	–	–	Frequency output, Ex i, passive	Current output, Ex i, passive, HART

Ground terminal → 7

Terminal assignment, Promag 53

The inputs and outputs on the communication board can be either permanently assigned or variable, depending on the version ordered (see table). Replacements for modules which are defective or which have to be replaced can be ordered as accessories.

Order variant	Terminal No. (inputs/outputs)			
	20 (+) / 21 (–)	22 (+) / 23 (–)	24 (+) / 25 (–)	26 (+) / 27 (–)
Fixed communication boards (fixed assignment)				
53***-**********A	–	–	Frequency output	Current output HART
53***-**********B	Relay output 2	Relay output 1	Frequency output	Current output HART
53***-**********F	–	–	–	PROFIBUS PA, Ex i
53***-**********G	–	–	–	FOUNDATION Fieldbus, Ex i
53***-**********H	–	–	–	PROFIBUS PA
53***-**********J	–	–	–	PROFIBUS DP
53***-**********K	–	–	–	FOUNDATION Fieldbus
53***-**********Q	–	–	Status input	MODBUS RS485
53***-**********S	–	–	Frequency output, Ex i	Current output, Ex i, passive, HART
53***-**********T	–	–	Frequency output, Ex i	Current output, Ex i, passive, HART
Flexible communication boards				
53***-**********C	Relay output 2	Relay output 1	Frequency output	Current output HART
53***-**********D	Status input	Relay output	Frequency output	Current output HART
53***-**********L	Status input	Relay output 2	Relay output 1	Current output HART
53***-**********M	Status input	Frequency output	Frequency output	Current output HART
53***-**********N	Current output	Frequency output	Status input	MODBUS RS485
53***-**********P	Current output	Frequency output	Status input	PROFIBUS DP
53***-**********V	Relay output 2	Relay output 1	Status input	PROFIBUS DP
53***-**********2	Relay output	Current output	Frequency output	Current output HART
53***-**********4	Current input	Relay output	Frequency output	Current output HART
53***-**********7	Relay output 2	Relay output 1	Status input	MODBUS RS485

Ground terminal → 7

Electrical connection, remote version

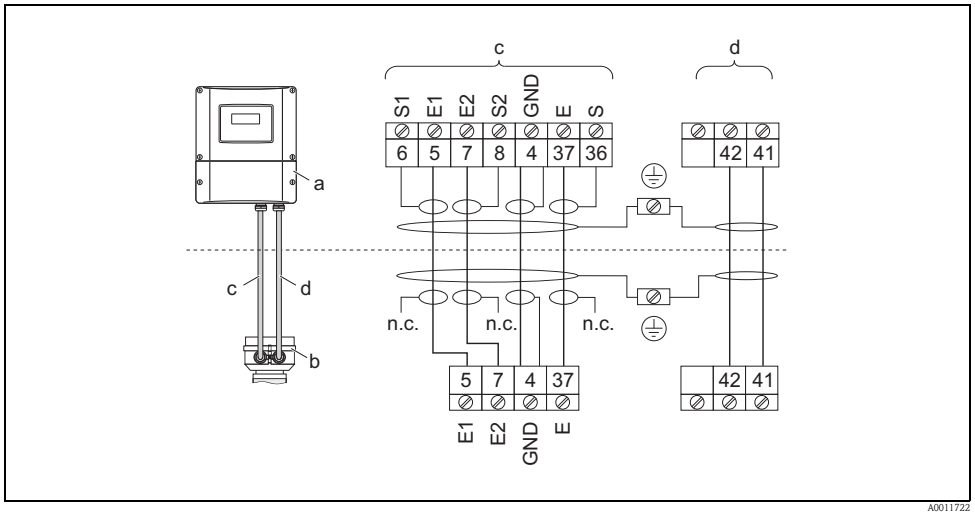

Connecting the remote version

a Wall-mount housing connection compartment
b Sensor connection housing cover
c Signal cable
d Coil current cable
n.c. Not connected, insulated cable shields
Terminal no. and cable colors: 6/5 = brown; 7/8 = white; 4 = green; 36/37 = yellow

Supply voltage (power supply)

- 85 to 260 V AC, 45 to 65 Hz
- 20 to 55 V AC, 45 to 65 Hz
- 16 to 62 V DC

PROFIBUS PA and FOUNDATION Fieldbus
- Non-Ex: 9 to 32 V DC
- Ex i: 9 to 24 V DC
- Ex d: 9 to 32 V DC

Cable entry

Power supply and signal cables (inputs/ outputs):
- Cable entry M20 × 1.5 (8 to 12 mm / 0.31 to 0.47")
- Sensor cable entry for armoured cables M20 × 1.5 (9.5 to 16 mm / 0.37 to 0.63")
- Thread for cable entries, ½" NPT, G ½"

Connecting cable for remote version:
- Cable entry M20 × 1.5 (8 to 12 mm / 0.31 to 0.47")
- Sensor cable entry for armoured cables M20 × 1.5 (9.5 to 16 mm / 0.37 to 0.63")
- Thread for cable entries, ½" NPT, G ½"

Remote version cable specifications

Coil cable
- 2 × 0.75 mm^2 (18 AWG) PVC cable with common, braided copper shield (∅ ~ 7 mm / 0.28")
- Conductor resistance: ≤ 37 Ω/km (≤ 0.011 Ω/ft)
- Capacitance core/core, shield grounded: ≤ 120 pF/m (≤ 37 pF/ft)
- Operating temperature: –20 to +80 °C (–68 to +176 °F)
- Cable cross-section: max. 2.5 mm^2 (14 AWG)
- Test voltage for cable insulation: ≤ 1433 AC r.m.s. 50/60 Hz or ≥ 2026 V DC

Signal cable
- 3 × 0.38 mm^2 (20 AWG) PVC cable with common, braided copper shield (∅ ~ 7 mm / 0.28") and individual shielded cores
- With empty pipe detection (EPD): 4 × 0.38 mm^2 (20 AWG) PVC cable with common, braided copper shield (∅ ~ 7 mm / 0.28") and individual shielded cores
- Conductor resistance: ≤ 50 Ω/km (≤ 0.015 Ω/ft)
- Capacitance core/shield: ≤ 420 pF/m (≤ 128 pF/ft)
- Operating temperature: –20 to +80 °C (–68 to +176 °F)
- Cable cross-section: max. 2.5 mm^2 (14 AWG)

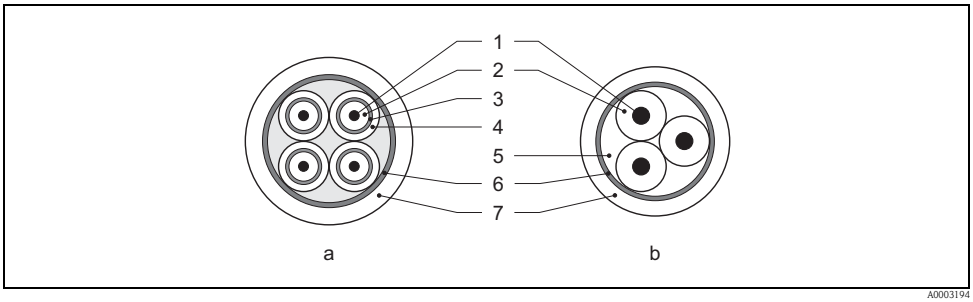

a Signal cable
b Coil current cable

1 Core
2 Core insulation
3 Core shield
4 Core jacket
5 Core reinforcement
6 Cable shield
7 Outer jacket

Operation in zones of severe electrical interference
The measuring device complies with the general safety requirements in accordance with EN 61010 and the EMC requirements of IEC/EN 61326 and NAMUR recommendation NE 21.

Caution!
Grounding is by means of the ground terminals provided for the purpose inside the connection housing. Ensure that the stripped and twisted lengths of cable shield to the ground terminal are as short as possible.

Power consumption

- AC: < 15 VA (incl. sensor)
- DC: < 15 W (incl. sensor)

Switch-on current:
- Max. 3 A (< 5 ms) for 260 V AC
- Max. 13.5 A (< 50 ms) for 24 V DC

Power supply failure

Lasting min. ½ cycle frequency: EEPROM saves measuring system data
- EEPROM or T-DAT (Promag 53 only) retain the measuring system data in the event of a power supply failure
- S-DAT: exchangeable data storage chip which stores the data of the sensor (nominal diameter, serial number, calibration factor, zero point etc.)

Potential equalization

Warning!
The measuring system must be included in the potential equalization.

Perfect measurement is only ensured when the fluid and the sensor have the same electrical potential. This is ensured by the reference electrode integrated in the sensor as standard.

The following should also be taken into consideration for potential equalization:
- Internal grounding concepts in the company
- Operating conditions, such as the material/ grounding of the pipes (see table)

Standard situation

Operating conditions	Potential equalization
When using the measuring device in a: ■ Metal, grounded pipe Potential equalization takes place via the ground terminal of the transmitter. Note! When installing in metal pipes, we recommend you connect the ground terminal of the transmitter housing with the piping.	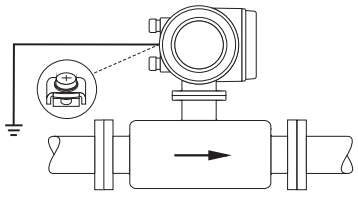 A0011892 Via the ground terminal of the transmitter

Special situations

Operating conditions	Potential equalization
When using the measuring device in a: ■ Metal pipe that is not grounded This connection method also applies in situations where: ■ Customary potential equalization cannot be ensured. ■ Excessively high equalizing currents can be expected. Both sensor flanges are connected to the pipe flange by means of a ground cable (copper wire, at least 6 mm² / 0.0093 in²) and grounded. Connect the transmitter or sensor connection housing, as applicable, to ground potential by means of the ground terminal provided for the purpose. ■ DN ≤ 300 (12"): the ground cable is mounted directly on the conductive flange coating with the flange screws. ■ DN ≥ 350 (14"): the ground cable is mounted directly on the transportation metal support. Note! The ground cable for flange-to-flange connections can be ordered separately as an accessory from Endress+Hauser.	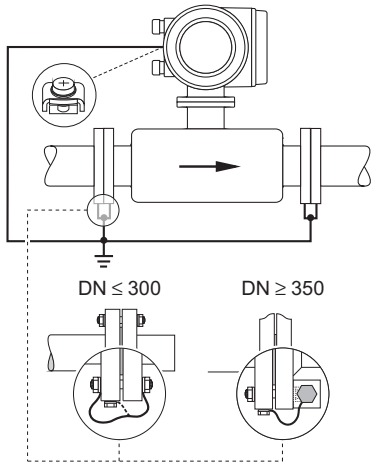 A0011893 Via the ground terminal of the transmitter and the flanges of the pipe
When using the measuring device in a: ■ Plastic pipe ■ Pipe with insulating lining This connection method also applies in situations where: ■ Customary potential equalization cannot be ensured. ■ Excessively high equalizing currents can be expected. Potential equalization takes place using additional ground disks, which are connected to the ground terminal via a ground cable (copper wire, at least 6 mm² / 0.0093 in²). When installing the ground disks, please comply with the enclosed Installation Instructions.	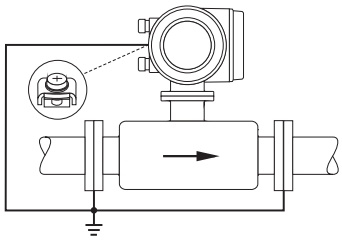 A0011895 Via the ground terminal of the transmitter and the optionally available ground disks

Operating conditions	Potential equalization
When using the measuring device in a: ■ Pipe with a cathodic protection unit The device is installed potential-free in the pipe. Only the two flanges of the pipe are connected with a ground cable (copper wire, at least 6 mm² / 0.0093 in²). Here, the ground cable is mounted directly on the conductive flange coating with flange screws. Note the following when installing: ■ The applicable regulations regarding potential-free installation must be observed. ■ There should be **no** electrically conductive connection between the pipe and the device. ■ The mounting material must withstand the applicable torques.	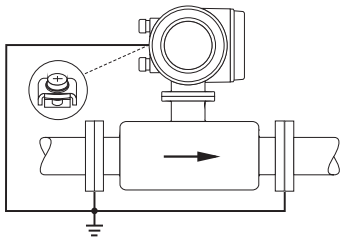 A0011896 Potential equalization and cathodic protection 1 Power supply isolation transformer 2 Electrically isolated

Performance characteristics

Reference operating conditions

As per DIN EN 29104 and VDI/VDE 2641:
- Fluid temperature: +28 °C ± 2 K (+82 °F ± 2 K)
- Ambient temperature: +22 °C ±2 K (+72 °F ± 2 K)
- Warm-up period: 30 minutes

Installation conditions:
- Inlet run > 10 × DN
- Outlet run > 5 × DN
- Sensor and transmitter grounded.
- The sensor is centered in the pipe.

Maximum measured error

Promag 50:
- Current output: also typically ± 5 µA
- Pulse output: ±0.5% o.r. ± 1 mm/s (±0.5% o.r. ± 0.04 in/s)
  optional: ±0.2% o.r. ± 2 mm/s (±0.2% o.r. ± 0.08 in/s) (o.r. = of reading)

Promag 53:
- Current output: also typically ± 5 µA
- Pulse output: ±0.2% o.r. ± 2 mm/s (±0.2% o.r. ± 0.08 in/s) (o.r. = of reading)

Fluctuations in the supply voltage do not have any effect within the specified range.

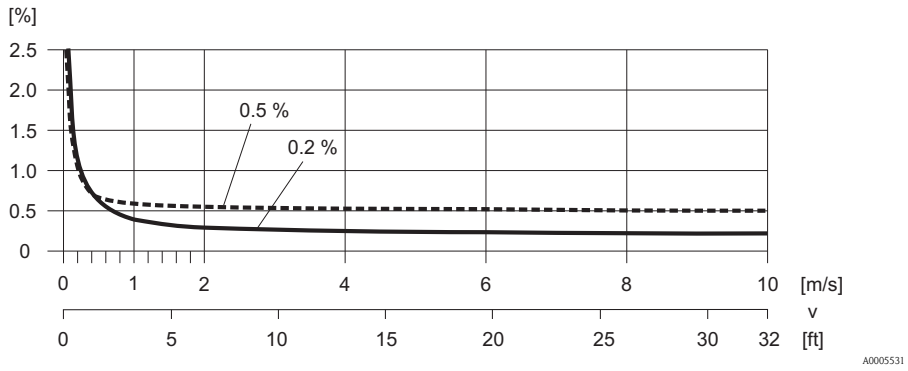

Max. measured error in % of reading

Repeatability

Max. ±0.1% o.r. ± 0.5 mm/s (±0.1% o.r. ± 0.02 in/s) (o.r. = of reading)

Operating conditions: Installations

Installation instructions

Mounting location

Entrained air or gas bubble formation in the measuring tube can result in an increase in measuring errors.
Avoid the following installation locations in the pipe:
- Highest point of a pipeline. Risk of air accumulating!
- Directly upstream from a free pipe outlet in a vertical pipeline.

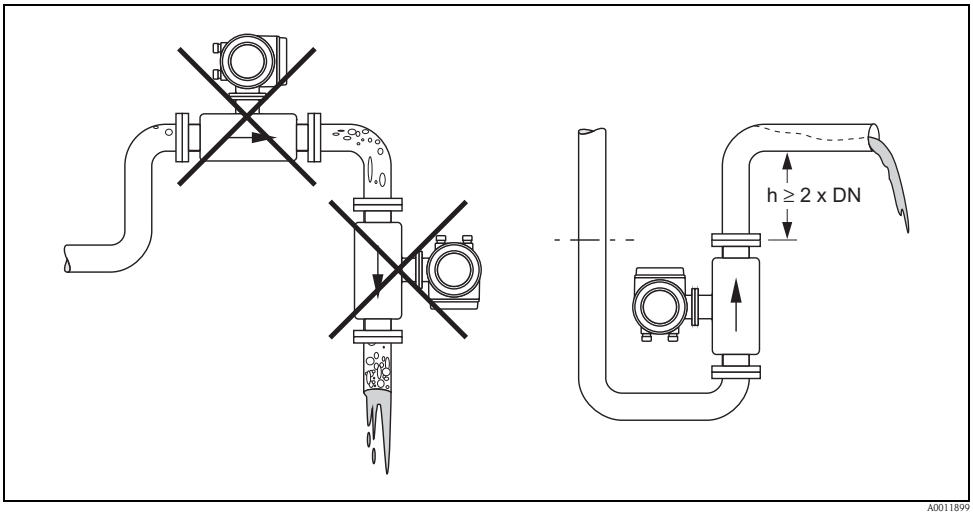

Mounting location

Installation of pumps

Sensors may not be installed on the pump suction side. This precaution is to avoid low pressure and the consequent risk of damage to the lining of the measuring tube. Information on the pressure tightness of the measuring tube lining → 21, Section "Pressure tightness".
Pulsation dampers may be needed when using piston pumps, piston diaphragm pumps or hose pumps. Information on the shock and vibration resistance of the measuring system → 20, Section "Shock and vibration resistance".

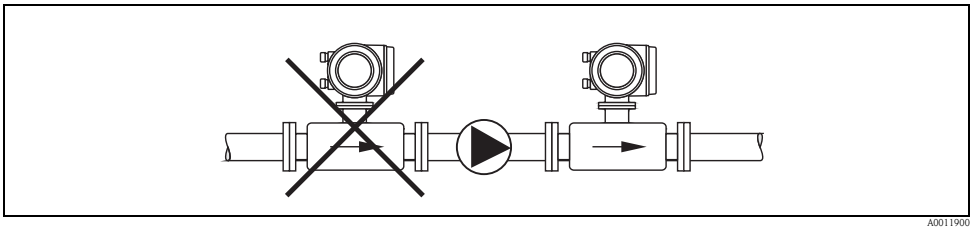

Installation of pumps

Partially filled pipes
Partially filled pipes with gradients necessitate a drain-type configuration.
The empty pipe detection function (EPD) provides additional security in detecting empty or partially filled pipes.

Caution!
Risk of solids accumulating. Do not install the sensor at the lowest point in the drain. It is advisable to install a cleaning valve.

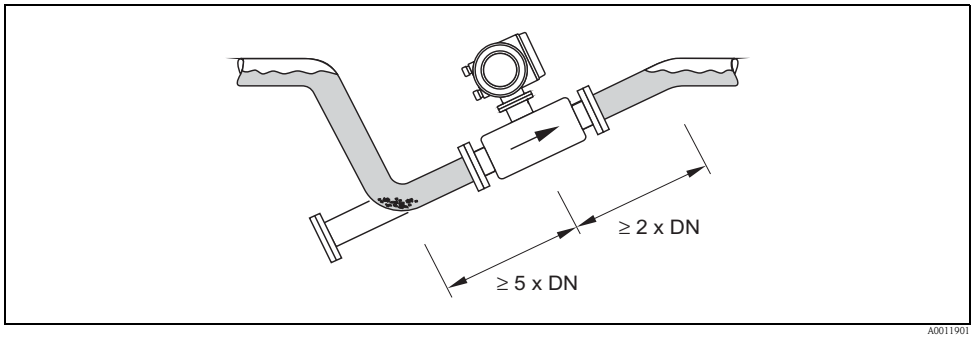

Installation with partially filled pipes

Down pipes
Install a siphon or a vent valve downstream of the sensor in down pipes h ≥ 5 m (16.4 ft). This precaution is to avoid low pressure and the consequent risk of damage to the lining of the measuring tube. This measure also prevents the liquid current stopping in the pipe which could cause air locks. Information on the pressure tightness of the measuring tube lining → 21, Section "Pressure tightness".

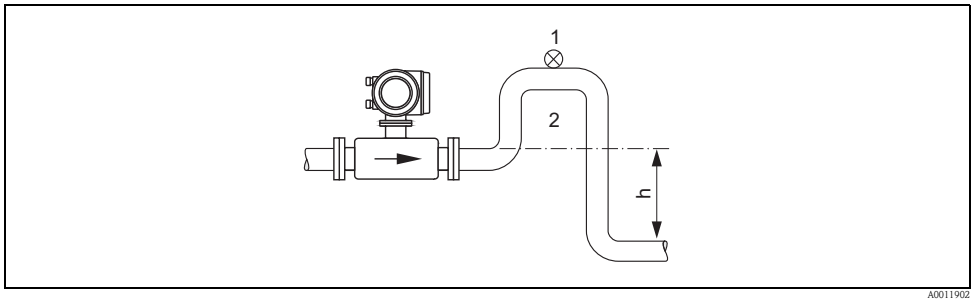

Installation measures for vertical pipes

1 Vent valve
2 Pipe siphon
h Length of the down pipe

Orientation

An optimum orientation helps avoid gas and air accumulations and deposits in the measuring tube. However, the measuring device also offers the additional function of empty pipe detection (EPD) for detecting partially filled measuring tubes or if outgassing fluids or fluctuating operating pressures are present.

Vertical orientation

This is the ideal orientation for self-emptying piping systems and for use in conjunction with empty pipe detection.

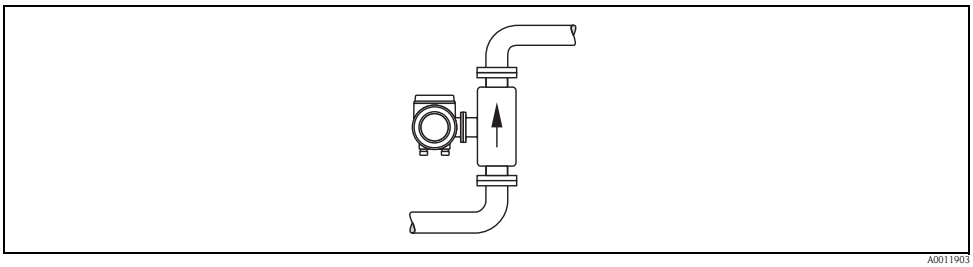

A0011903

Vertical orientation

Horizontal orientation

The measuring electrode axis should be horizontal. This prevents brief insulation of the two measuring electrodes by entrained air bubbles.

Caution!

Empty pipe detection only works correctly with horizontal orientation if the transmitter housing is facing upwards. Otherwise there is no guarantee that empty pipe detection will respond if the measuring tube is only partially filled or empty.

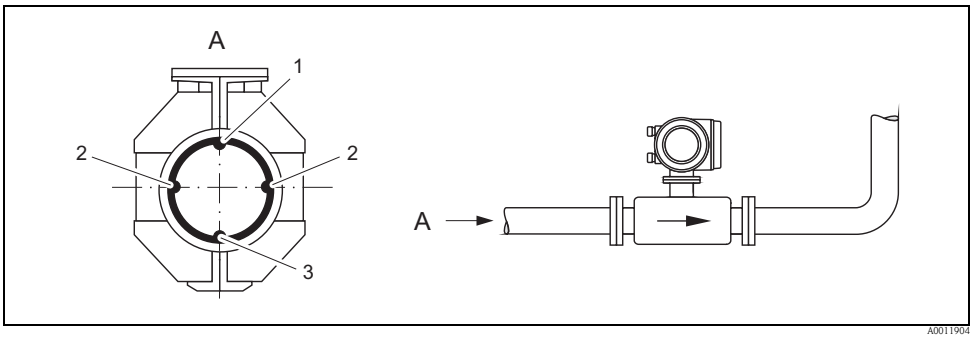

A0011904

Horizontal orientation

1 EPD electrode for empty pipe detection
2 Measuring electrodes for signal detection
3 Reference electrode for potential equalization

Vibrations
Secure the piping and the sensor if vibration is severe.

Caution!
If vibrations are too severe, we recommend the sensor and transmitter be mounted separately. Information on the permitted shock and vibration resistance → 20, Section "Shock and vibration resistance".

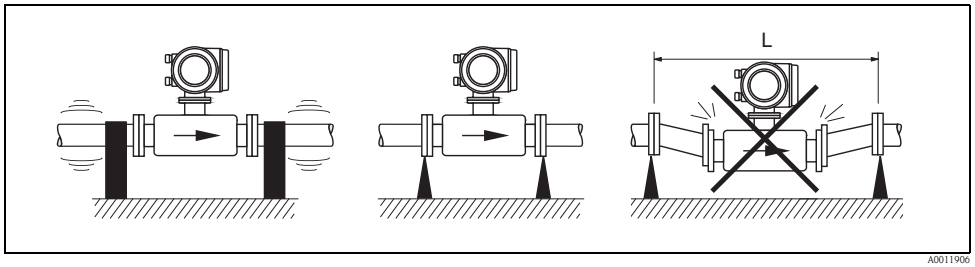

Measures to prevent vibration of the measuring device

L > 10 m (33 ft)

Foundations, supports
If the nominal diameter is DN ≥ 350, mount the transmitter on a foundation of adequate load-bearing strength.

Caution!
Do not allow the casing to take the weight of the sensor. This would buckle the casing and damage the internal magnetic coils.

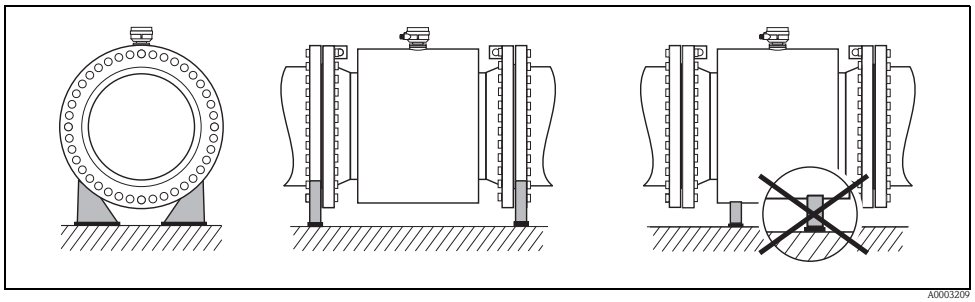

Inlet and outlet run

If possible, install the sensor well clear of assemblies such as valves, T-pieces, elbows etc.

Note the following inlet and outlet runs to comply with measuring accuracy specifications:
- Inlet run: ≥ 5 × DN
- Outlet run: ≥ 2 × DN

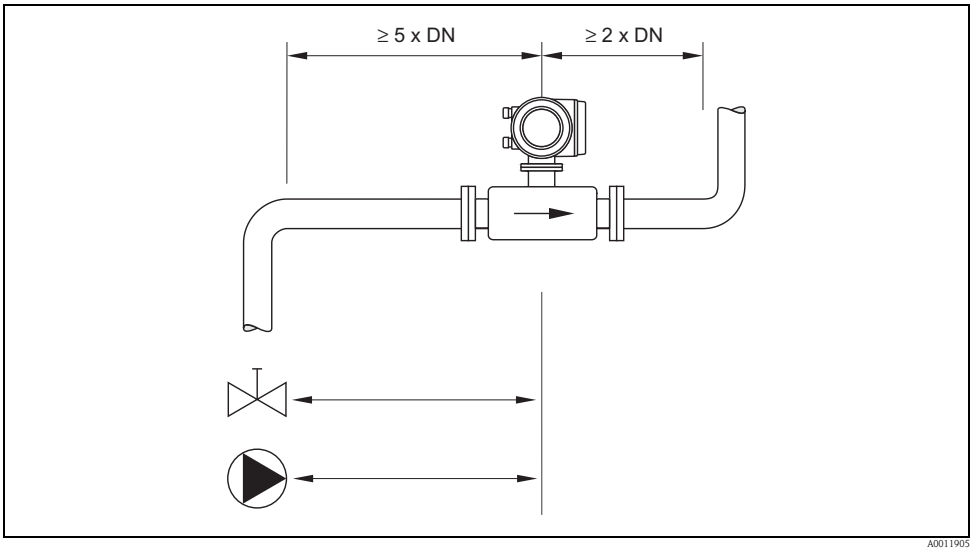

Inlet and outlet run

Adapters

Suitable adapters to DIN EN 545 (double-flange reducers) can be used to install the sensor in larger-diameter pipes. The resultant increase in the rate of flow improves measuring accuracy with very slow-moving fluids. The nomogram shown here can be used to calculate the pressure loss caused by reducers and expanders.

Note!
The nomogram only applies to liquids of viscosity similar to water.

1. Calculate the ratio of the diameters d/D.
2. From the nomogram read off the pressure loss as a function of flow velocity (downstream from the reduction) and the d/D ratio.

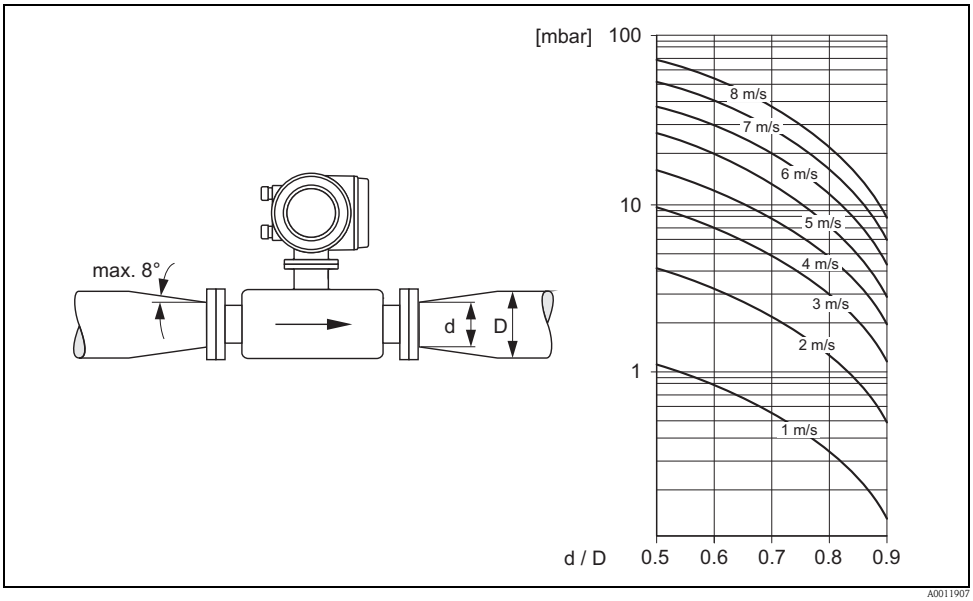

Pressure loss due to adapters

Length of connecting cable

When mounting the remote version, please note the following to achieve correct measuring results:

- Fix cable run or lay in armored conduit. Cable movements can falsify the measuring signal especially in the case of low fluid conductivities.
- Route the cable well clear of electrical machines and switching elements.
- If necessary, ensure potential equalization between sensor and transmitter.
- The permitted cable length L_{max} is determined by the fluid conductivity. A minimum conductivity of 20 µS/cm is required for measuring demineralized water.
- When the empty pipe detection function is switched on (EPD), the maximum connecting cable length is 10 m (33 ft).

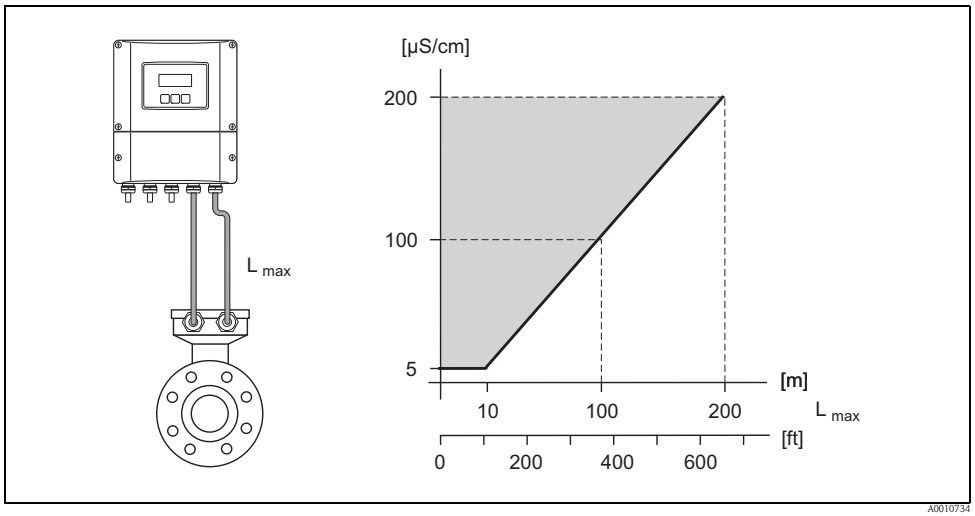

Permitted length of connecting cable for remote version
Area marked in gray = permitted range; L_{max} = length of connecting cable in [m] ([ft]); fluid conductivity in [µS/cm]

Operating conditions: Environment

Ambient temperature range

Transmitter
- Standard: –20 to +60 °C (–4 to +140 °F)
- Optional: –40 to +60 °C (–40 to +140 °F)



Note!
At ambient temperatures below –20 °C (–4 °F)the readability of the display may be impaired.

Sensor
- Flange material carbon steel: –10 to +60 °C (14 to +140 °F)
- Flange material stainless steel: –40 to +60 °C (–40 to +140 °F)



Caution!
The permitted temperature range of the measuring tube lining may not be undershot or overshot
→ 21, Section "Medium temperature range".

Please note the following points:
- Install the device in a shady location. Avoid direct sunlight, particularly in warm climatic regions.
- The transmitter must be mounted separate from the sensor if both the ambient and fluid temperatures are high.

Storage temperature

The storage temperature corresponds to the operating temperature range of the measuring transmitter and the appropriate measuring sensors.



Caution!
- The measuring device must be protected against direct sunlight during storage in order to avoid unacceptably high surface temperatures.
- A storage location must be selected where moisture does not collect in the measuring device. This will help prevent fungus and bacteria infestation which can damage the liner.
- Do not remove the protective plates or caps on the process connections until the device is ready to install.

Degree of protection
- Standard: IP 67 (NEMA 4X) for transmitter and sensor.
- Optional: IP 68 (NEMA 6P) for sensor for remote version.
- For information regarding applications where the device is buried directly in the soil or is installed in a flooded wastewater basin please contact your local Endress+Hauser Sales Center.

Shock and vibration resistance

Acceleration up to 2 g following IEC 600 68-2-6

Electromagnetic compatibility (EMC)
- As per IEC/EN 61326 and NAMUR recommendation NE 21.

Operating conditions: Process

Medium temperature range

The permitted temperature depends on the lining of the measuring tube:
- Polyurethane: –20 to +50 °C (–4 to +122 °F) (DN 25 to 1200 / 1 to 48")
- Hard rubber: ±0 to +80 °C (+32 to +176 °F) (DN 50 to 2000 / 2 to 78")

Conductivity

The minimum conductivity is:
- ≥ 5 µS/cm for fluids generally
- ≥ 20 µS/cm for demineralized water

Note!
In the remote version, the necessary minimum conductivity also depends on the cable length (→ 19, Section "Length of connecting cable").

Medium pressure range (nominal pressure)

- EN 1092-1 (DIN 2501)
  - PN 6 (DN 350 to 2000 / 14 to 78")
  - PN 10 (DN 200 to 2000 / 8 to 78")
  - PN 16 (DN 65 to 2000 / 3 to 78")
  - PN 25 (DN 200 to 1000 / 8 to 40")
  - PN 40 (DN 25 to 150 / 1 to 6")
- ANSI B 16.5
  - Class 150 (DN 1 to 24")
  - Class 300 (DN 1 to 6")
- AWWA
  - Class D (DN 28 to 78")
- JIS B2220
  - 10 K (DN 50 to 300 / 2 to 12")
  - 20 K (DN 25 to 300 / 1 to 12")
- AS 2129
  - Table E (DN 80, 100, 150 to 400, 500, 600 / 3", 4", 6 to 16", 20", 24")
- AS 4087
  - PN 16 (DN 80, 100, 150 to 400, 500, 600 / 3", 4", 6 to 16", 20", 24")

Pressure tightness

Measuring tube lining: Polyurethane

Nominal diameter		Limit values for abs. pressure [mbar] ([psi]) at fluid temperatures:			
		25 °C (77 °F)		50 °C (122 °F)	
[mm]	[inch]	[mbar]	[psi]	[mbar]	[psi]
25 to 1200	1 to 48"	0	0	0	0

Measuring tube lining: Hard rubber

Nominal diameter		Limit values for abs. pressure [mbar] ([psi]) at fluid temperatures:					
		25 °C (77 °F)		50 °C (122 °F)		80 °C (176 °F)	
[mm]	[inch]	[mbar]	[psi]	[mbar]	[psi]	[mbar]	[psi]
50 to 2000	2 to 78"	0	0	0	0	0	0

Limiting flow

The diameter of the pipe and the flow rate determine the nominal diameter of the sensor.
The optimum flow velocity is between 2 to 3 m/s (6.5 to 9.8 ft/s). The velocity of flow (v), moreover, has to be matched to the physical properties of the fluid:

- v < 2 m/s (6.5 ft/s): for abrasive fluids such as potter's clay, lime milk, ore slurry etc.
- v > 2 m/s (6.5 ft/s): for fluids causing build-up such as wastewater sludges etc.

Flow characteristic values (SI units)

Diameter		Recommended flow	Factory settings		
		Min./max. full scale value	Full scale value Current output	Pulse value	Low flow
[mm]	[inch]	(v ~ 0.3 or 10 m/s)	(v ~ 2.5 m/s)	(~ 2 pulses/s)	(v ~ 0.04 m/s)
25	1"	9 to 300 dm³/min	75 dm³/min	0.50 dm³	1 dm³/min
32	–	15 to 500 dm³/min	125 dm³/min	1.00 dm³	2 dm³/min
40	1½"	25 to 700 dm³/min	200 dm³/min	1.50 dm³	3 dm³/min
50	2"	35 to 1100 dm³/min	300 dm³/min	2.50 dm³	5 dm³/min
65	–	60 to 2000 dm³/min	500 dm³/min	5.00 dm³	8 dm³/min
80	3"	90 to 3000 dm³/min	750 dm³/min	5.00 dm³	12 dm³/min
100	4"	145 to 4700 dm³/min	1200 dm³/min	10.00 dm³	20 dm³/min
125	–	220 to 7500 dm³/min	1850 dm³/min	15.00 dm³	30 dm³/min
150	6"	20 to 600 m³/h	150 m³/h	0.025 m³	2.5 m³/h
200	8"	35 to 1100 m³/h	300 m³/h	0.05 m³	5.0 m³/h
250	10"	55 to 1700 m³/h	500 m³/h	0.05 m³	7.5 m³/h
300	12"	80 to 2400 m³/h	750 m³/h	0.10 m³	10 m³/h
350	14"	110 to 3300 m³/h	1000 m³/h	0.10 m³	15 m³/h
375	15"	140 to 4200 m³/h	1200 m³/h	0.15 m³	20 m³/h
400	16"	140 to 4200 m³/h	1200 m³/h	0.15 m³	20 m³/h
450	18"	180 to 5400 m³/h	1500 m³/h	0.25 m³	25 m³/h
500	20"	220 to 6600 m³/h	2000 m³/h	0.25 m³	30 m³/h
600	24"	310 to 9600 m³/h	2500 m³/h	0.30 m³	40 m³/h
700	28"	420 to 13500 m³/h	3500 m³/h	0.50 m³	50 m³/h
–	30"	480 to 15000 m³/h	4000 m³/h	0.50 m³	60 m³/h
800	32"	550 to 18000 m³/h	4500 m³/h	0.75 m³	75 m³/h
900	36"	690 to 22500 m³/h	6000 m³/h	0.75 m³	100 m³/h
1000	40"	850 to 28000 m³/h	7000 m³/h	1.00 m³	125 m³/h
–	42"	950 to 30000 m³/h	8000 m³/h	1.00 m³	125 m³/h
1200	48"	1250 to 40000 m³/h	10000 m³/h	1.50 m³	150 m³/h
–	54"	1550 to 50000 m³/h	13000 m³/h	1.50 m³	200 m³/h
1400	–	1700 to 55000 m³/h	14000 m³/h	2.00 m³	225 m³/h
–	60"	1950 to 60000 m³/h	16000 m³/h	2.00 m³	250 m³/h
1600	–	2200 to 70000 m³/h	18000 m³/h	2.50 m³	300 m³/h
–	66"	2500 to 80000 m³/h	20500 m³/h	2.50 m³	325 m³/h
1800	72"	2800 to 90000 m³/h	23000 m³/h	3.00 m³	350 m³/h
–	78"	3300 to 100000 m³/h	28500 m³/h	3.50 m³	450 m³/h
2000	–	3400 to 110000 m³/h	28500 m³/h	3.50 m³	450 m³/h

Flow characteristic values (US units)					
Diameter		**Recommended flow rate**	**Factory settings**		
[inch]	[mm]	Min./max. full scale value (v ~ 0.3 or 10 m/s)	Full scale value Current output (v ~ 2.5 m/s)	Pulse value (~ 2 pulses/s)	Low flow (v ~ 0.04 m/s)
1"	25	2.5 to 80 gal/min	18 gal/min	0.20 gal	0.25 gal/min
–	32	4 to 130 gal/min	30 gal/min	0.20 gal	0.50 gal/min
1½"	40	7 to 190 gal/min	50 gal/min	0.50 gal	0.75 gal/min
2"	50	10 to 300 gal/min	75 gal/min	0.50 gal	1.25 gal/min
–	65	16 to 500 gal/min	130 gal/min	1 gal	2.0 gal/min
3"	80	24 to 800 gal/min	200 gal/min	2 gal	2.5 gal/min
4"	100	40 to 1250 gal/min	300 gal/min	2 gal	4.0 gal/min
–	125	60 to 1950 gal/min	450 gal/min	5 gal	7.0 gal/min
6"	150	90 to 2650 gal/min	600 gal/min	5 gal	12 gal/min
8"	200	155 to 4850 gal/min	1200 gal/min	10 gal	15 gal/min
10"	250	250 to 7500 gal/min	1500 gal/min	15 gal	30 gal/min
12"	300	350 to 10600 gal/min	2400 gal/min	25 gal	45 gal/min
14"	350	500 to 15000 gal/min	3600 gal/min	30 gal	60 gal/min
15"	375	600 to 19000 gal/min	4800 gal/min	50 gal	60 gal/min
16"	400	600 to 19000 gal/min	4800 gal/min	50 gal	60 gal/min
18"	450	800 to 24000 gal/min	6000 gal/min	50 gal	90 gal/min
20"	500	1000 to 30000 gal/min	7500 gal/min	75 gal	120 gal/min
24"	600	1400 to 44000 gal/min	10500 gal/min	100 gal	180 gal/min
28"	700	1900 to 60000 gal/min	13500 gal/min	125 gal	210 gal/min
30"	–	2150 to 67000 gal/min	16500 gal/min	150 gal	270 gal/min
32"	800	2450 to 80000 gal/min	19500 gal/min	200 gal	300 gal/min
36"	900	3100 to 100000 gal/min	24000 gal/min	225 gal	360 gal/min
40"	1000	3800 to 125000 gal/min	30000 gal/min	250 gal	480 gal/min
42"	–	4200 to 135000 gal/min	33000 gal/min	250 gal	600 gal/min
48"	1200	5500 to 175000 gal/min	42000 gal/min	400 gal	600 gal/min
54"	–	9 to 300 Mgal/min	75 Mgal/min	0.0005 Mgal	1.3 Mgal/min
–	1400	10 to 340 Mgal/min	85 Mgal/min	0.0005 Mgal	1.3 Mgal/min
60"	–	12 to 380 Mgal/min	95 Mgal/min	0.0005 Mgal	1.3 Mgal/min
–	1600	13 to 450 Mgal/min	110 Mgal/min	0.0008 Mgal	1.7 Mgal/min
66"	–	14 to 500 Mgal/min	120 Mgal/min	0.0008 Mgal	2.2 Mgal/min
72"	1800	16 to 570 Mgal/min	140 Mgal/min	0.0008 Mgal	2.6 Mgal/min
78"	–	18 to 650 Mgal/min	175 Mgal/min	0.001 Mgal	3.0 Mgal/min
–	2000	20 to 700 Mgal/min	175 Mgal/min	0.001 Mgal	3.0 Mgal/min

Pressure loss

- No pressure loss if the sensor is installed in a pipe with the same nominal diameter.
- Pressure losses for configurations incorporating adapters according to DIN EN 545 (→ 18, Section "Adapters").

Mechanical construction

Design, dimensions

Transmitter remote version, wall-mount housing (non Ex-zone and II3G/Zone 2)

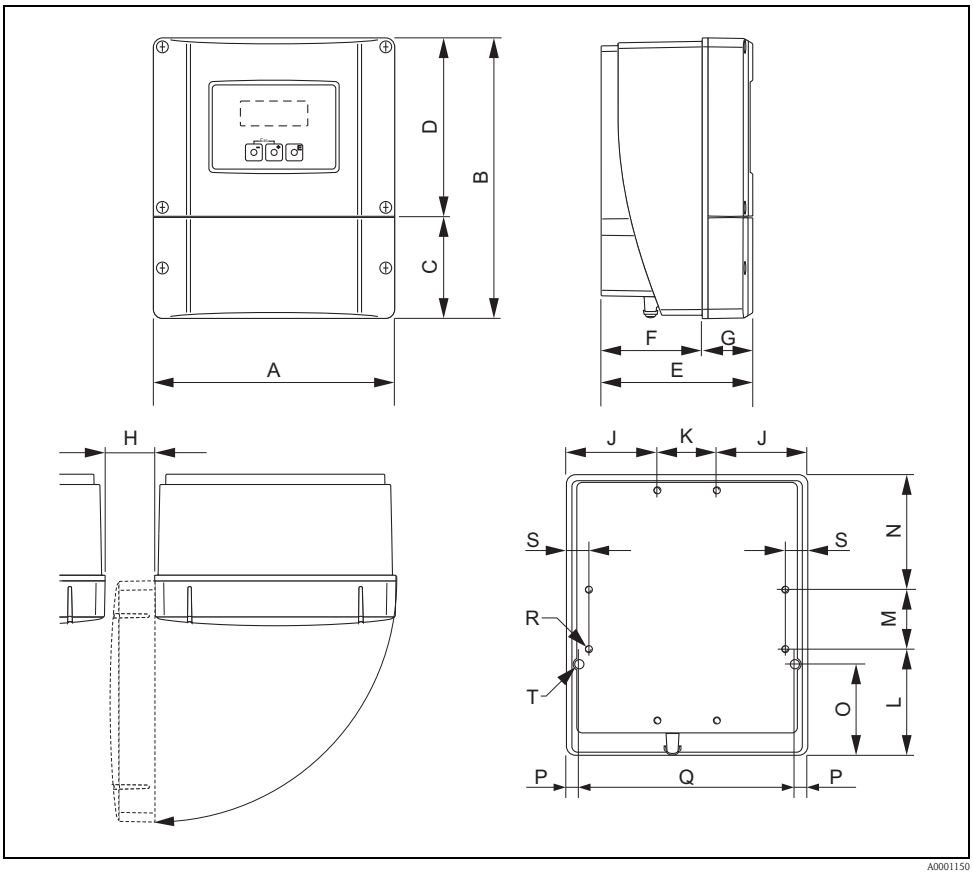

Dimensions (SI units)

A	B	C	D	E	F	G	H	J
215	250	90.5	159.5	135	90	45	> 50	81
K	L	M	N	O	P	Q	R	S
53	95	53	102	81.5	11.5	192	8 × M5	20

All dimensions in [mm]

Dimensions (US units)

A	B	C	D	E	F	G	H	J
8.46	9.84	3.56	6.27	5.31	3.54	1.77	> 1.97	3.18
K	L	M	N	O	P	Q	R	S
2.08	3.74	2.08	4.01	3.20	0.45	7.55	8 × M5	0.79

All dimensions in [inch]

Transmitter remote version, connection housing (II2GD/Zone 1)

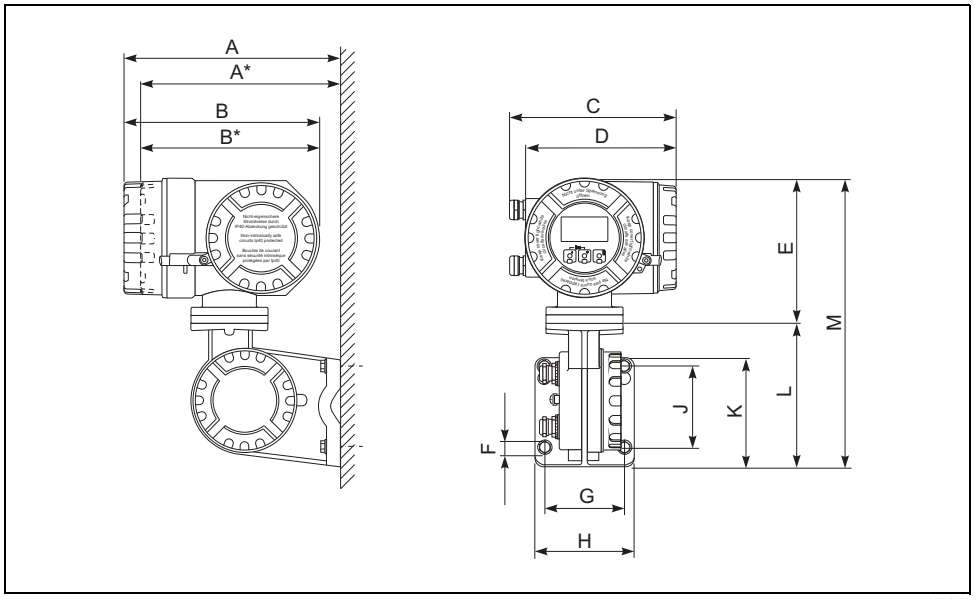

Dimensions (SI units)

A	A*	B	B*	C	D	E	Ø F	G	H	J	K	L	M
265	242	240	217	206	186	178	8.6 (M8)	100	130	100	144	170	355

All dimensions in [mm]

Dimensions (US units)

A	A*	B	B*	C	D	E	Ø F	G	H	J	K	L	M
10.4	9.53	9.45	8.54	8.11	7.32	7.01	0.34 (M8)	3.94	5.12	3.94	5.67	6.69	14.0

All dimensions in [inch]

There is a separate mounting kit for the wall-mounted housing. It can be ordered from Endress+Hauser as an accessory. The following installation variants are possible:
- Panel-mounted installation
- Pipe mounting

Installation in control panel

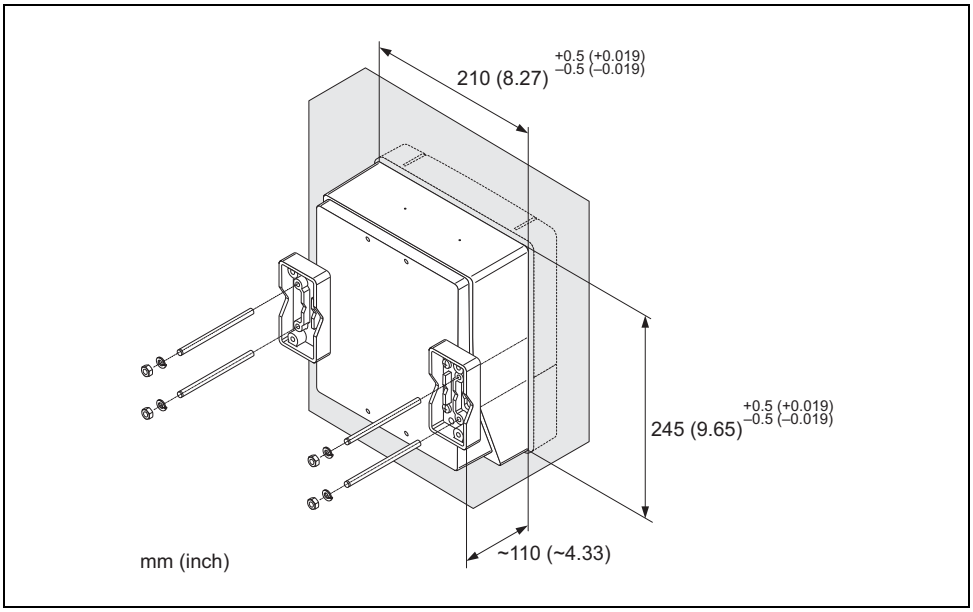

A0001131

Pipe mounting

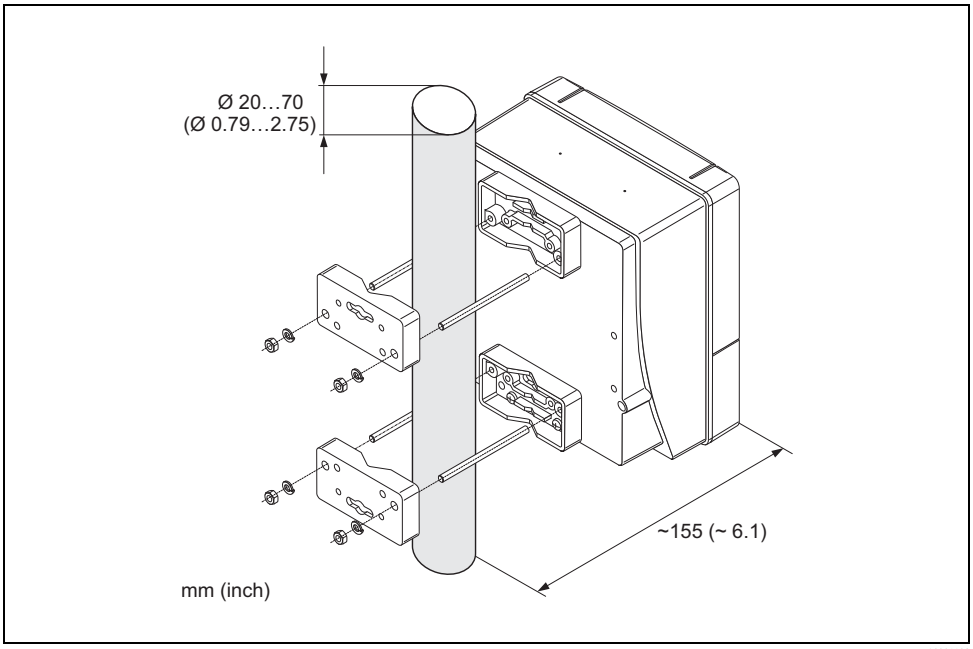

A0001132

Compact version DN ≤ 300 (12")

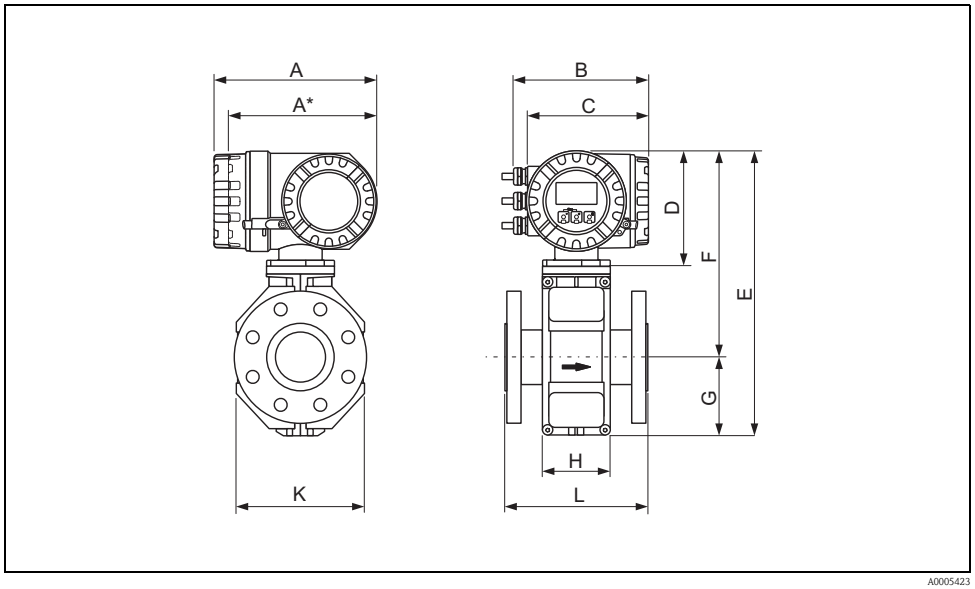

Dimensions (SI units)

DN EN (DIN) / JIS / AS [2]	L [1]	A	A*	B	C	D	E	F	G	H	K
25	200	227	207	187	168	160	341	257	84	94	120
32	200						341	257	84	94	120
40	200						341	257	84	94	120
50	200						341	257	84	94	120
65	200						391	282	109	94	180
80	200						391	282	109	94	180
100	250						391	282	109	94	180
125	250						472	322	150	140	260
150	300						472	322	150	140	260
200	350						527	347	180	156	324
250	450						577	372	205	166	400
300	500						627	397	230	166	460

[1] The length is regardless of the pressure rating selected. Fitting length to DVGW.
[2] For flanges to AS, only the nominal diameters DN 80, 100 and 150 to 300 are available.
All dimensions in [mm]

Dimensions (US units)

DN ANSI	L [1]	A	A*	B	C	D	E	F	G	H	K
1"	7.87						13.4	10.1	3.31	3.70	4.72
1½"	7.87						13.4	10.1	3.31	3.70	4.72
2"	7.87						13.4	10.1	3.31	3.70	4.72
3"	7.87						15.4	11.1	4.29	3.70	7.09
4"	9.84	8.94	8.15	7.36	6.61	6.30	15.4	11.1	4.29	3.70	7.09
6"	11.8						18.6	12.7	5.91	5.51	10.2
8"	13.8						20.8	13.7	7.09	6.14	12.8
10"	17.7						22.7	14.7	8.07	6.14	15.8
12"	19.7						24.7	15.6	9.06	6.54	18.1

[1] The length is regardless of the pressure rating selected. Fitting length to DVGW.
All dimensions in [inch]

Compact version DN ≥ 350 (14")

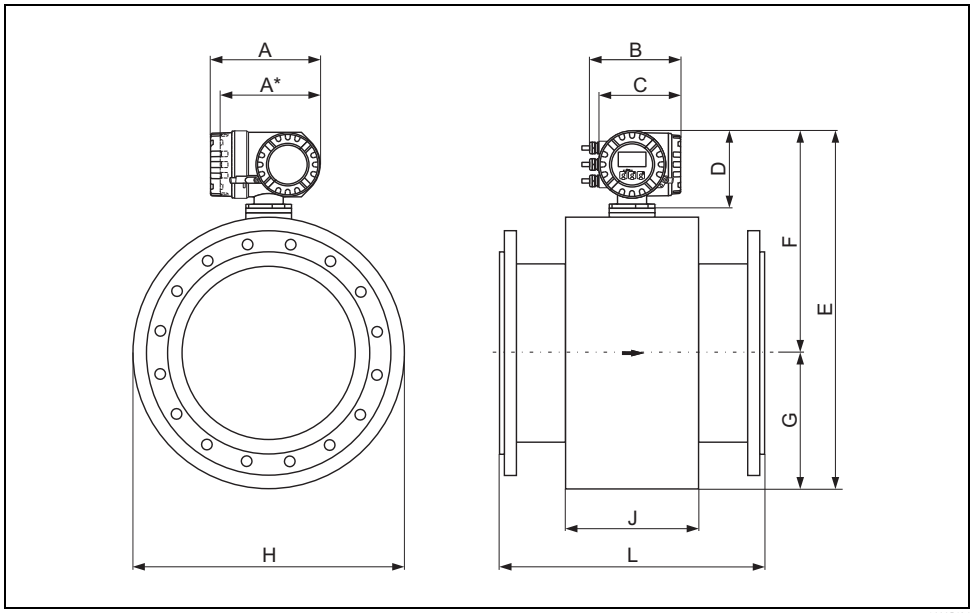

Dimensions (SI units)

DN EN (DIN) / AS [2]	L [1]	A	A*	B	C	D	E	F	G	H	J
350	550	227	207	187	168	160	738.5	456.5	282.0	276	564
375	600						790.5	482.5	308.0	276	616
400	600						790.5	482.5	308.0	276	616
450	650						840.5	507.5	333.0	292	666
500	650						891.5	533.0	358.5	292	717
600	780						995.5	585.0	410.5	402	821
700	910						1198.5	686.5	512.0	589	1024
750	975						1198.5	686.5	512.0	626	1024
800	1040						1241.5	708.5	533.5	647	1067
900	1170						1394.5	784.5	610.0	785	1220
1000	1300						1546.5	860.5	686.0	862	1372
1050	1365						1598.5	886.5	712.0	912	1424
1200	1560						1796.5	985.5	811.0	992	1622
1350	1755						1998.5	1086.5	912.0	1252	1824
1400	1820						2148.5	1161.5	987.0	1252	1974
1500	1950						2196.5	1185.5	1011.0	1392	2022
1600	2080						2286.5	1230.5	1056.0	1482	2112
1650	2145						2360.5	1267.5	1093.0	1482	2186
1800	2340						2550.5	1362.5	1188.0	1632	2376
2000	2600						2650.5	1412.5	1238.0	1732	2476

[1] The length is regardless of the pressure rating selected. Fitting length to DVGW.
[2] For flanges to AS, only DN 350, 400, 500 and 600 are available.
All dimensions in [mm]

Dimensions (US units)

DN ANSI / AWWA [2]	L [1]	A	A*	B	C	D	E	F	G	H	J
14"	21.6	8.94	8.15	7.36	6.61	6.30	29.1	17.9	11.1	10.9	22.2
15"	23.6						31.1	18.9	12.1	10.9	24.2
16"	23.6						31.1	18.9	12.1	10.9	24.2
18"	25.6						33.1	19.9	13.1	11.5	26.2
20"	25.6						35.1	20.9	14.1	11.5	28.2
24"	30.7						39.2	23.0	16.2	15.8	32.3
28"	35.8						47.2	27.0	20.1	23.2	40.3
30"	38.4						47.2	27.0	20.1	24.6	40.3
32"	40.9						48.9	27.9	21.0	25.5	42.0
36"	46.0						54.9	30.9	24.0	30.9	48.0
40"	51.2						60.9	33.9	27.0	33.9	54.0
42"	53.7						62.9	34.9	28.0	35.9	56.0
48"	61.4						71.7	38.8	31.9	39.0	63.8
54"	69.1						78.7	42.8	35.9	42.3	71.8
56"	71.7						84.6	45.7	38.9	49.3	77.7
60"	76.8						86.5	46.7	39.8	54.8	79.6
64"	81.9						90.0	48.4	41.6	58.4	83.2
66"	84.4						92.9	49.9	43.0	58.4	86.0
72"	92.1						100.4	53.6	46.8	64.2	93.5
78"	102.3						104.3	55.6	48.7	68.2	97.5

[1] The length is regardless of the pressure rating selected. Fitting length to DVGW.
[2] Flanges ≤ 24" only to ANSI available, ≥ 28" only to AWWA available.
All dimensions in [inch]

Sensor, remote version DN ≤ 300 (12")

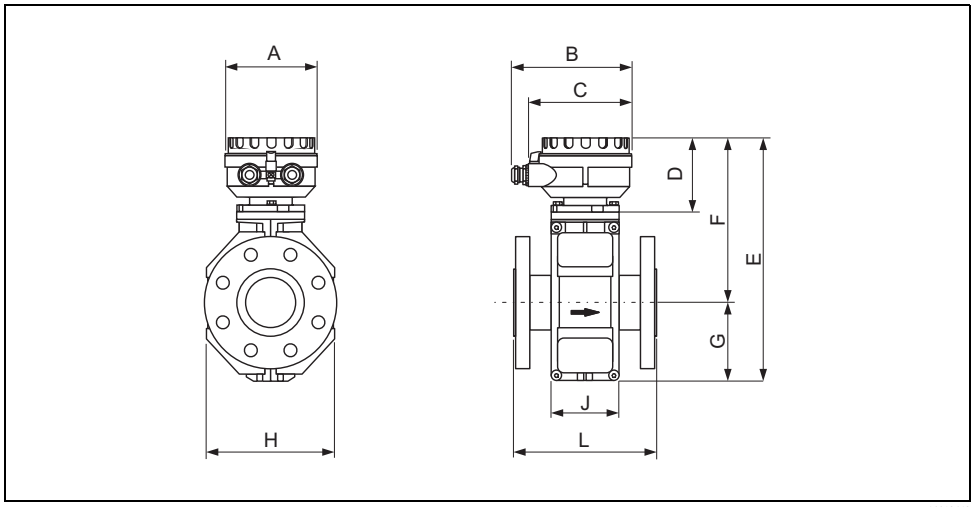

A0012462

Dimensions (SI units)

DN EN (DIN) / JIS / AS [2]	L [1]	A	B	C	D	E	F	G	H	J
25	200	129	163	143	102	286	202	84	120	94
32	200	129	163	143	102	286	202	84	120	94
40	200	129	163	143	102	286	202	84	120	94
50	200	129	163	143	102	286	202	84	120	94
65	200	129	163	143	102	336	227	109	180	94
80	200	129	163	143	102	336	227	109	180	94
100	250	129	163	143	102	336	227	109	180	94
125	250	129	163	143	102	417	267	150	260	140
150	300	129	163	143	102	417	267	150	260	140
200	350	129	163	143	102	472	292	180	324	156
250	450	129	163	143	102	522	317	205	400	166
300	500	129	163	143	102	572	342	230	460	166

[1] The length is regardless of the pressure rating selected. Fitting length to DVGW.
[2] For flanges to AS, only the nominal diameters DN 80, 100 and 150 to 300 are available.
All dimensions in [mm]

Dimensions (US units)

DN ANSI	L [1]	A	B	C	D	E	F	G	H	J
1"	7.87	5.08	6.42	5.63	4.02	11.3	7.95	3.32	4.72	3.70
1½"	7.87	5.08	6.42	5.63	4.02	11.3	7.95	3.32	4.72	3.70
2"	7.87	5.08	6.42	5.63	4.02	11.3	7.95	3.32	4.72	3.70
3"	7.87	5.08	6.42	5.63	4.02	13.2	8.94	4.30	7.10	3.70
4"	9.84	5.08	6.42	5.63	4.02	13.2	8.94	4.30	7.10	3.70
6"	11.8	5.08	6.42	5.63	4.02	16.4	10.5	5.91	10.2	5.51
8"	13.8	5.08	6.42	5.63	4.02	18.6	11.5	7.10	12.8	6.14
10"	17.7	5.08	6.42	5.63	4.02	20.6	12.5	8.08	15.8	6.14
12"	19.7	5.08	6.42	5.63	4.02	22.5	13.5	9.06	18.1	6.54

[1] The length is regardless of the pressure rating selected. Fitting length to DVGW.
All dimensions in [inch]

Sensor, remote version DN ≥ 350 (14")

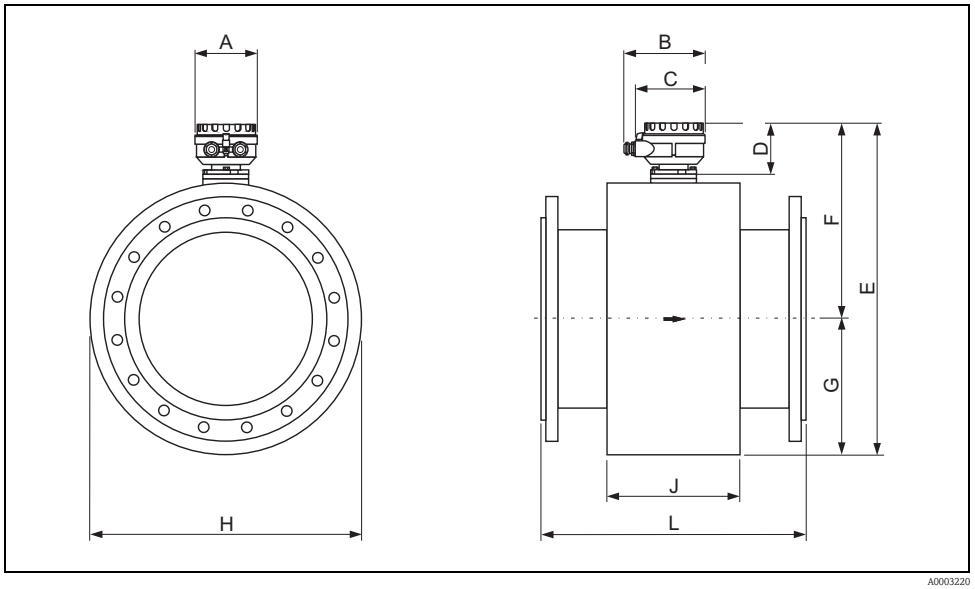

Dimensions (SI units)

DN EN (DIN) / AS [2]	L [1]	A	B	C	D	E	F	G	H	J
350	550	129	163	143	102	683.5	401.5	282.0	564	276
375	600					735.5	427.5	308.0	616	276
400	600					735.5	427.5	308.0	616	276
450	650					785.5	452.5	333.0	666	292
500	650					836.5	478.0	358.5	717	292
600	780					940.5	530.0	410.5	821	402
700	910					1143.5	631.5	512.0	1024	589
750	975					1143.5	631.5	512.0	1024	626
800	1040					1186.5	653.0	533.5	1067	647
900	1170					1339.5	729.5	610.0	1220	785
1000	1300					1491.5	805.5	686.0	1372	862
1050	1365					1543.5	831.5	712.0	1424	912
1200	1560					1741.5	930.5	811.0	1622	992
1350	1755					1943.5	1031.5	912.0	1824	1252
1400	1820					2093.5	1106.5	987.0	1974	1252
1500	1950					2141.5	1130.5	1011.0	2022	1392
1600	2080					2231.5	1175.5	1056.0	2112	1482
1650	2145					2305.5	1212.5	1093.0	2186	1482
1800	2340					2495.5	1307.5	1188.0	2376	1632
2000	2600					2595.5	1357.5	1238.0	2476	1732

[1] The length is regardless of the pressure rating selected. Fitting length to DVGW.
[2] For flanges to AS, only DN 350, 400, 500 and 600 are available.
All dimensions in [mm]

Dimensions (US units)

DN ANSI / AWWA [2]	L [1]	A	B	C	D	E	F	G	H	J
14"	21.6	5.08	6.42	5.63	4.02	29.1	15.8	11.1	22.2	10.9
15"	23.6					31.1	16.8	12.1	24.2	10.9
16"	23.6					31.1	16.8	12.1	24.2	10.9
18"	25.6					33.1	17.8	13.1	26.2	11.5
20"	25.6					35.1	18.8	14.1	28.2	11.5
24"	30.7					39.2	20.9	16.2	32.3	15.8
28"	35.8					45.0	24.9	20.1	40.3	23.2
30"	38.4					45.0	24.9	20.1	40.3	24.6
32"	40.9					46.7	25.7	21.0	42.0	25.5
36"	46.0					52.7	28.7	24.0	48.0	30.9
40"	51.2					58.7	31.7	27.0	54.0	33.9
42"	53.7					60.7	32.7	28.0	56.0	35.9
48"	61.4					68.5	36.6	31.9	63.8	39.0
54"	69.1					76.5	40.6	35.9	71.8	42.3
56"	71.7					82.4	43.6	38.9	77.7	49.3
60"	76.8					84.3	44.5	39.8	79.6	54.8
64"	81.9					87.9	46.3	41.6	83.2	58.4
66"	84.4					90.8	47.7	43.0	86.0	58.4
72"	92.1					98.2	51.5	46.8	93.5	64.2
78"	102.3					102.2	53.4	48.7	97.5	68.2

[1] The length is regardless of the pressure rating selected. Fitting length to DVGW.
[2] Flanges ≤ 24" only to ANSI available, ≥ 28" only to AWWA available.
All dimensions in [inch]

Ground disk for flange connections

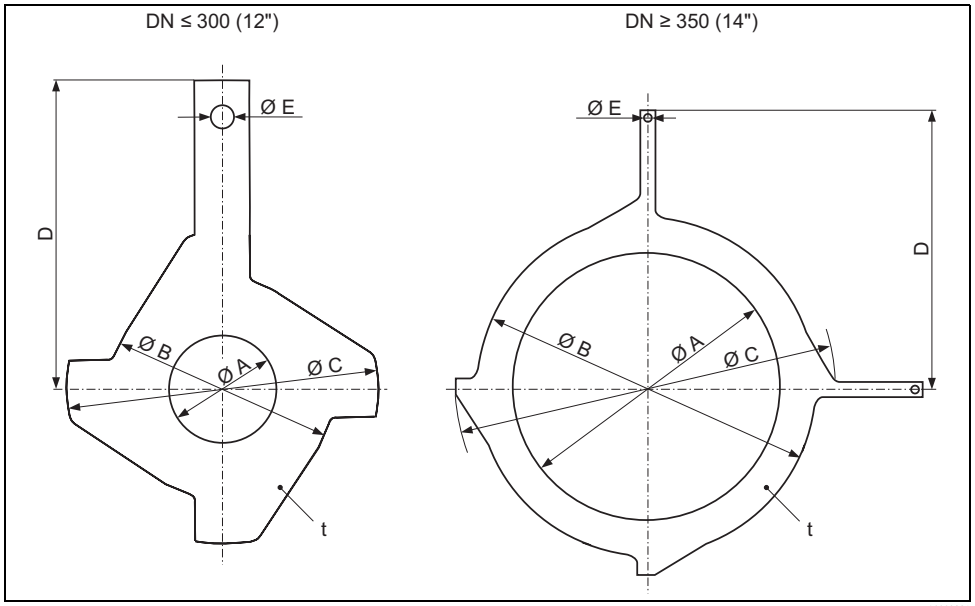

Dimensions (SI units)

DN [1] EN (DIN) / JIS / AS [2]	A	B	C	D	E	t
25	26	62	77.5	87.5	6.5	2
32	35	80	87.5	94.5		
40	41	82	101	103		
50	52	101	115.5	108		
65	68	121	131.5	118		
80	80	131	154.5	135		
100	104	156	186.5	153		
125	130	187	206.5	160		
150	158	217	256	184		
200	206	267	288	205		
250	260	328	359	240		
300 [3]	312	375	413	273		
300 [4]	310	375	404	268		
350 [3]	343	433	479	365	9.0	
375 [3]	393	480	542	395		
400 [3]	393	480	542	395		
450 [3]	439	538	583	417		
500 [3]	493	592	650	460		
600 [3]	593	693	766	522		

[1] Ground disks can be used for all flange standards/pressure ratings that can be delivered, except for DN ≥ 300.
[2] Only DN 32, 40, 65 and 125 are available for flanges according to AS.
[3] PN 10/16
[4] PN 25, JIS 10K/20K
All dimensions in [mm]

Dimensions (US units)

DN [1] ANSI	A	B	C	D	E	t
1"	1.02	2.44	3.05	3.44	0.26	0.08
1½"	1.61	3.23	3.98	4.06		
2"	2.05	3.98	4.55	4.25		
3"	3.15	5.16	6.08	5.31		
4"	4.09	6.14	7.34	6.02		
6"	6.22	8.54	10.08	7.24		
8"	8.11	10.5	11.3	8.07		
10"	10.2	12.9	14.1	9.45		
12"	12.3	14.8	16.3	10.8		
14"	13.5	17.1	18.9	14.4	0.35	
15"	15.45	18.9	21.3	15.6		
16"	15.45	18.9	21.3	15.6		
18"	17.3	21.2	23.0	16.4		
20"	19.4	23.3	25.6	18.1		
24"	23.4	27.3	30.1	20.6		

[1] Ground disks can be used for all flange standards/pressure ratings.
All dimensions in [inch]

Weight

Weight in SI units

Weight data in kg

Nominal diameter		Compact version						Remote version (without cable)						
								Sensor						Transmitter
[mm]	[inch]	EN (DIN) / AS [1]		JIS		ANSI / AWWA		EN (DIN) / AS [1]		JIS		ANSI / AWWA		Wall-mount housing
25	1"	PN 40	7.3	10K	7.3	Class 150	7.3	PN 40	5.3	10K	5.3	Class 150	5.3	6.0
32	–		8.0		7.3		–		6.0		5.3		–	
40	1½"		9.4		8.3		9.4		7.4		6.3		7.4	
50	2"		10.6		9.3		10.6		8.6		7.3		8.6	
65	–	PN 16	12		11.1		–	PN 16	10.0		9.1		–	
80	3"		14		112.5		14.0		12.0		10.5		12.0	
100	4"		16		14.7		16.0		14.0		12.7		14.0	
125	–		21.5		21.0		–		19.5		19.0		–	
150	6"		25.5		24.5		25.5		23.5		22.5		23.5	
200	8"	PN 10	45		41.9		45	PN 10	43		39.9		43	
250	10"		65		69.4		75		63		67.4		73	
300	12"		70		72.3		110		68		70.3		108	
350	14"	PN 6	105				175	PN 6	103				173	
375	15"		120				–		118				–	
400	16"		120				205		118				203	
450	18"		161				255		159				253	
500	20"		156				285		154				283	
600	24"		208				405		206				403	
700	28"		304			Class D	400		302			Class D	398	
–	30"		–				460		–				458	
800	32"		357				550		355				548	
900	36"		485				800		483				798	
1000	40"		589				900		587				898	
–	42"		–				1100		–				1098	
1200	48"		850				1400		848				1398	
–	54"		–				2200		–				2198	
1400	–		1300				–		1298				–	
–	60"		–				2700		–				2698	
1600	–		1700				–		1698				–	
–	66"		–				3700		–				3698	
1800	72"		2200				4100		2198				4098	
–	78"		–				4600		–				4598	
2000	–		2800				–		2798				–	

[1] For flanges to AS, only DN 80, 100, 150 to 400, 500 and 600 are available.

- Transmitter (compact version): 3.4 kg
- Weight data valid for standard pressure ratings and without packaging material.

Weight in US units (only ANSI / AWWA)

Weight data in lbs						
Nominal diameter		Compact version		Remote version (without cable)		
				Sensor		Transmitter
[mm]	[inch]		ANSI /AWWA		ANSI / AWWA	Wall-mount housing
25	1"	Class 150	16.1	Class 150	11.7	13.2
40	1½"		20.7		16.3	
50	2"		23.4		19.0	
80	3"		30.9		26.5	
100	4"		35.3		30.9	
150	6"		56.2		51.8	
200	8"		99.2		94.8	
250	10"		165.4		161.0	
300	12"		242.6		238.1	
350	14"		385.9		381.5	
400	16"		452.0		447.6	
450	18"		562.3		557.9	
500	20"		628.4		624.0	
600	24"		893.0		888.6	
700	28"	Class D	882.0	Class D	877.6	
–	30"		1014.3		1009.9	
800	32"		1212.8		1208.3	
900	36"		1764.0		1759.6	
1000	40"		1984.5		1980.1	
–	42"		2425.5		2421.1	
1200	48"		3087.0		3082.6	
–	54"		4851.0		4846.6	
–	60"		5953.5		5949.1	
–	66"		8158.5		8154.1	
1800	72"		9040.5		9036.1	
–	78"		10143.0		10138.6	

- Transmitter (compact version): 7.5 lbs
- Weight data valid for standard pressure ratings and without packaging material.

Measuring tube specifications

Diameter		Pressure rating						Internal diameter			
		EN (DIN)	AS 2129	AS 4087	ANSI	AWWA	JIS	Hard rubber		Polyurethane	
[mm]	[inch]	[bar]			[lbs]			[mm]	[inch]	[mm]	[inch]
25	1"	PN 40	–	–	Cl. 150	–	20 K	–	–	24	0.94
32	–	PN 40	–	–	–	–	20 K	–	–	32	1.26
40	1½"	PN 40	–	–	Cl. 150	–	20 K	–	–	38	1.50
50	2"	PN 40	Table E	PN 16	Cl. 150	–	10 K	50	1.97	50	1.97
65	–	PN 16	–	–	–	–	10 K	66	2.60	66	2.60
80	3"	PN 16	Table E	PN 16	Cl. 150	–	10 K	79	3.11	79	3.11
100	4"	PN 16	Table E	PN 16	Cl. 150	–	10 K	102	4.02	102	4.02
125	–	PN 16	–	–	–	–	10 K	127	5.00	127	5.00
150	6"	PN 16	Table E	PN 16	Cl. 150	–	10 K	156	6.14	156	6.14
200	8"	PN 10	Table E	PN 16	Cl. 150	–	10 K	204	8.03	204	8.03
250	10"	PN 10	Table E	PN 16	Cl. 150	–	10 K	258	10.2	258	10.2
300	12"	PN 10	Table E	PN 16	Cl. 150	–	10 K	309	12.2	309	12.2
350	14"	PN 6	Table E	PN 16	Cl. 150	–	–	342	13.5	342	13.5
375	15"	–	–	PN 16	–	–	–	392	15.4	–	–
400	16"	PN 6	Table E	PN 16	Cl. 150	–	–	392	15.4	392	15.4
450	18"	PN 6	–	–	Cl. 150	–	–	437	17.2	437	17.2
500	20"	PN 6	Table E	PN 16	Cl. 150	–	–	492	19.4	492	19.4
600	24"	PN 6	Table E	PN 16	Cl. 150	–	–	594	23.4	594	23.4
700	28"	PN 6	–	–	–	Class D	–	692	27.2	692	27.2
–	30"	–	–	–	–	Class D	–	742	29.2	742	29.2
800	32"	PN 6	–	–	–	Class D	–	794	31.3	794	31.3
900	36"	PN 6	–	–	–	Class D	–	891	35.1	891	35.1
1000	40"	PN 6	–	–	–	Class D	–	994	39.1	994	39.1
–	42"	–	–	–	–	Class D	–	1043	41.1	1043	41.1
1200	48"	PN 6	–	–	–	Class D	–	1197	47.1	1197	47.1
–	54"		–	–	–	Class D	–	1339	52.7	–	–
1400	–	PN 6	–	–	–	–	–	1402	55.2	–	–
–	60"	–	–	–	–	Class D	–	1492	58.7	–	–
1600	–	PN 6	–	–	–	–	–	1600	63.0	–	–
–	66"	–	–	–	–	Class D	–	1638	64.5	–	–
1800	72"	PN 6	–	–	–	Class D	–	1786	70.3	–	–
2000	78"	PN 6	–	–	–	Class D	–	1989	78.3	–	–

Material

- Transmitter housing
  - Compact housing: powder-coated die-cast aluminum
  - Wall-mount housing: powder-coated die-cast aluminum
- Sensor housing
  - DN 25 to 300 (1 to 12"): powder-coated die-cast aluminum
  - DN 350 to 2000 (14 to 78"): with protective lacquering
- Measuring tube
  - DN ≤ 300 (12"): stainless steel 1.4301 or 1.4306/304L; (for flanges made of carbon steel with Al/Zn protective coating)
  - DN ≥ 350 (14"): stainless steel 1.4301 or 1.4306/304L; (for flanges made of carbon steel with Al/Zn protective coating)
- Electrodes: 1.4435, Alloy C-22, Tantalum
- Flanges
  - EN 1092-1 (DIN 2501): 1.4571/316L; RSt37-2 (S235JRG2); C22; FE 410W B (DN ≤ 300 (12"): with Al/Zn protective coating; DN ≥ 350 (14") with protective lacquering)
  - ANSI: A105; F316L (DN ≤ 300 (12"): with Al/Zn protective coating; DN ≥ 350 (14") with protective lacquering)
  - AWWA: 1.0425
  - JIS: RSt37-2 (S235JRG2); HII; 1.0425/316L (DN ≤ 300 (12"): with Al/Zn protective coating; DN ≥ 350 (14") with protective lacquering)
  - AS 2129
    - DN 150 to 300, 600 (6 to 12", 24"): A105 or RSt37-2 (S235JRG2)
    - DN 50, 80, 100, 350, 400, 500 (2", 3", 4", 14", 16", 20"): A105 or St44-2 (S275JR)
  - AS 4087: A105 or St44-2 (S275JR)
- Seals: to DIN EN 1514-1
- Ground disks: 1.4435/316L, Alloy C-22, Tantalum

Material load diagram

Caution!
The following diagrams contain material load diagrams (reference curves) for flange materials with regard to the medium temperature. However, the maximum medium temperatures permitted always depend on the lining material of the sensor and/or the sealing material (→ 21).

Flange connection to EN 1092-1 (DIN 2501)
Material: RSt37-2 (S235JRG2) / C22 / Fe 410W B

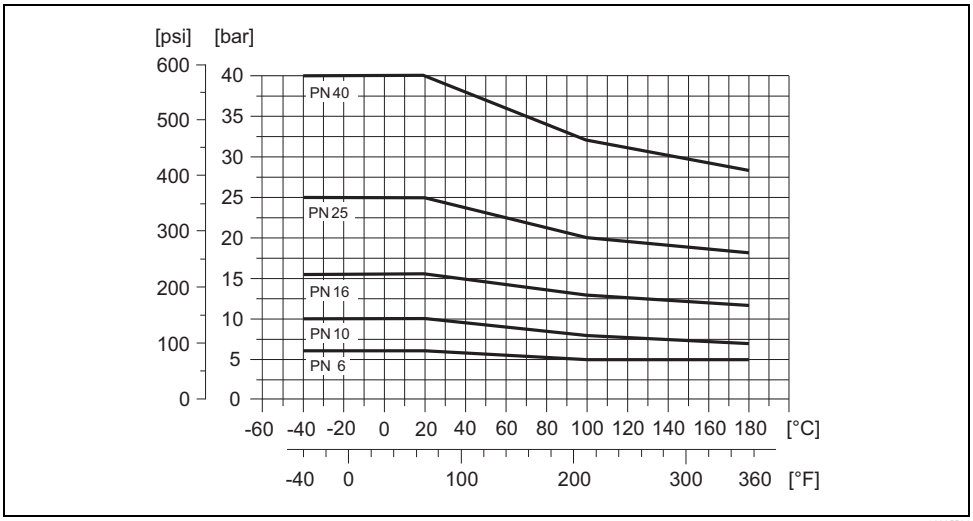

A0005594

Flange connection to EN 1092-1 (DIN 2501)
Material: 316L / 1.4571

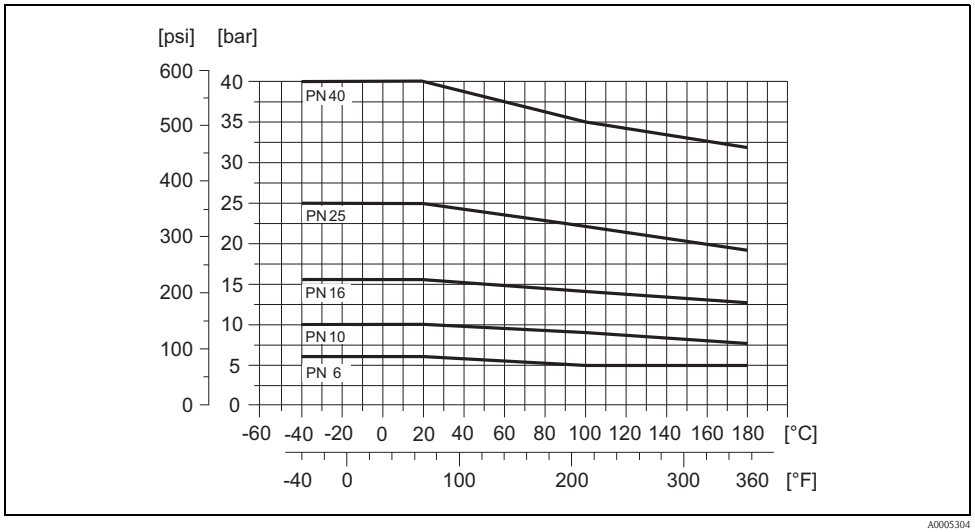

Flange connection to ANSI B16.5
Material: A 105

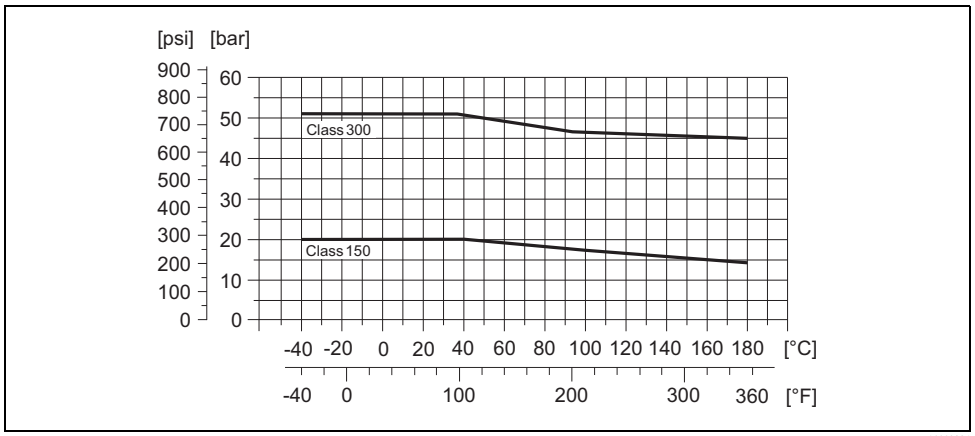

Flange connection to ANSI B16.5
Material: F316L

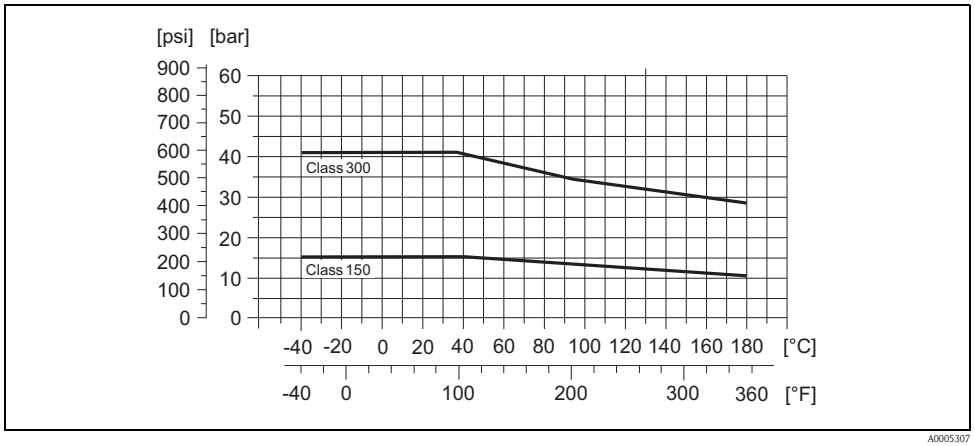

Flange connection to AWWA C 207, Class D
Material: 1.0425

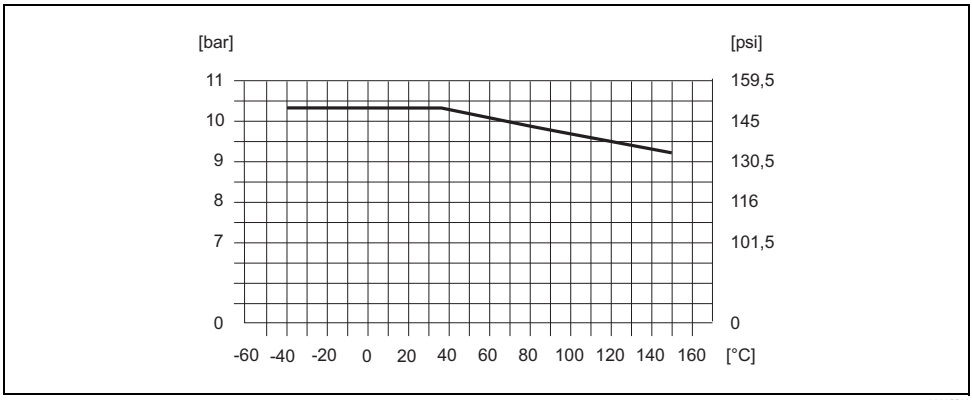

Flange connection to JIS B2220
Material: RSt37-2 (S235JRG2) / HII / 1.0425 / 316L

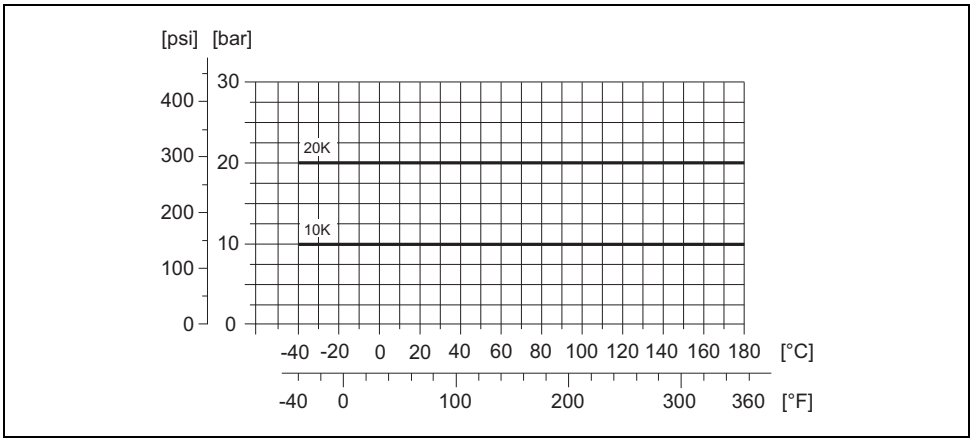

Flange connection to AS 2129 Table E or AS 4087 PN 16
Material: A105 / RSt37-2 (S235JRG2) / St44-2 (S275JR)

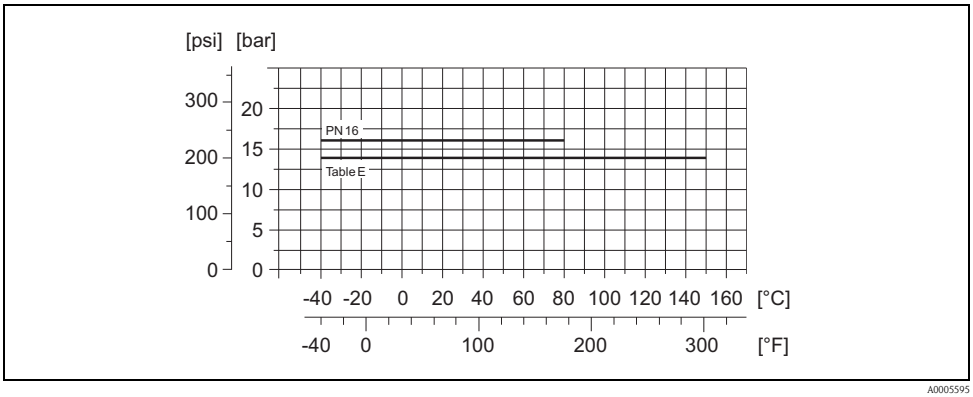

Fitted electrodes

Measuring electrodes, reference electrodes and empty pipe detection electrodes:
- Standard available with 1.4435, Alloy C-22, tantalum
- Optional: exchangeable measuring electrodes made of 1.4435 (DN 350 to 2000 / 14 to 78")

Process connections

Flange connection:
- EN 1092-1 (DIN 2501), DN ≤ 300 (12") form A, DN ≥ 350 (14") form B
  (Dimensions to DIN 2501, DN 65 PN 16 and DN 600 (24") PN 16 exclusively to EN 1092-1)
- ANSI B16.5
- AWWA C 207, Class D
- JIS B2220
- AS 2129 Table E
- AS 4087 PN 16

Surface roughness

- Electrodes
  – 1.4435, Alloy C-22, tantal: ≤ 0.3 to 0.5 µm (≤ 11.8 to 19.7 µin)

(all data refer to parts in contact with medium)

Human interface

Display elements

- Liquid crystal display: backlit, two lines (Promag 50) or four lines (Promag 53) with 16 characters per line
- Custom configurations for presenting different measured-value and status variables
- Totalizer
  – Promag 50: 2 totalizers
  – Promag 53: 3 totalizers

Operating elements

Unified operation concept for both types of transmitter:

Promag 50:
- Local operation via three keys (−, +, E)
- Quick Setup menus for straightforward commissioning

Promag 53:
- Local operation via three keys (−, +, E)
- Application-specific Quick Setup menus for straightforward commissioning

Language groups

Language groups available for operation in different countries:

Promag 50, Promag 53:
- Western Europe and America (WEA):
  English, German, Spanish, Italian, French, Dutch, Portuguese
- Eastern Europe and Scandinavia (EES):
  English, Russian, Polish, Norwegian, Finnish, Swedish, Czech
- South and east Asia (SEA):
  English, Japanese, Indonesian

Promag 53:
- China (CN):
  English, Chinese

You can change the language group via the operating program "FieldCare".

Remote operation

- Promag 50: Remote control via HART, PROFIBUS DP/PA
- Promag 53: Remote control via HART, PROFIBUS DP/PA, MODBUS RS485, FOUNDATION Fieldbus

Certificates and approvals

CE mark

The measuring system is in conformity with the statutory requirements of the EC Directives. Endress+Hauser confirms successful testing of the device by affixing to it the CE mark.

C-tick mark

The measuring system meets the EMC requirements of the "Australian Communications and Media Authority (ACMA)".

Pressure measuring device approval

Measuring devices with a nominal diameter smaller than or equal to DN 25 correspond to Article 3(3) of the EC Directive 97/23/EC (Pressure Equipment Directive) and have been designed and manufactured according to good engineering practice. Where necessary (depending on the medium and process pressure), there are additional optional approvals to Category II/III for larger nominal diameters.

Ex approval

Information about currently available Ex versions (ATEX, IECEx, FM, CSA, NEPSI) can be supplied by your Endress+Hauser Sales Center on request. All explosion protection data are given in a separate documentation which is available upon request.

Other standards and guidelines

- EN 60529
  Degrees of protection by housing (IP code)
- EN 61010
  Protection Measures for Electrical Equipment for Measurement, Control, Regulation and Laboratory Procedures.
- IEC/EN 61326
  “Emission in accordance with requirements for Class A”.
  Electromagnetic compatibility (EMC requirements)
- NAMUR NE 21:
  Electromagnetic compatibility (EMC) of industrial process and laboratory control equipment.
- NAMUR NE 43:
  Standardization of the signal level for the breakdown information of digital transmitters with analog output signal.
- NAMUR NE 53:
  Software of field devices and signal-processing devices with digital electronics.
- ANSI/ISA-S82.01
  Safety Standard for Electrical and Electronic Test, Measuring, Controlling and related Equipment - General Requirements Pollution degree 2, Installation Category II.
- CAN/CSA-C22.2 No. 1010.1-92
  Safety requirements for Electrical Equipment for Measurement and Control and Laboratory Use. Pollution degree 2, Installation Category II

FOUNDATION Fieldbus certification

The flow device has successfully passed all the test procedures carried out and is certified and registered by the Fieldbus Foundation. The device thus meets all the requirements of the following specifications:

- Certified to FOUNDATION Fieldbus Specification
- The device meets all the specifications of the FOUNDATION Fieldbus H1.
- Interoperability Test Kit (ITK), revision status 5.01 (device certification number: on request)
- The device can also be operated with certified devices of other manufacturers
- Physical Layer Conformance Test of the Fieldbus Foundation

MODBUS RS485 certification

The measuring device meets all the requirements of the MODBUS/TCP conformity test and has the “MODBUS/TCP Conformance Test Policy, Version 2.0”. The measuring device has successfully passed all the test procedures carried out and is certified by the “MODBUS/TCP Conformance Test Laboratory” of the University of Michigan.

PROFIBUS DP/PA certification

The flow device has successfully passed all the test procedures carried out and is certified and registered by the PNO (PROFIBUS User Organisation). The device thus meets all the requirements of the following specifications:

- Certified to PROFIBUS PA, profile version 3.0 (device certification number: on request)
- The device can also be operated with certified devices of other manufacturers (interoperability)

Accessories

Various accessories, which can be ordered separately from Endress+Hauser, are available for the transmitter and the sensor. Your Endress+Hauser service organization can provide detailed information on the order codes in question.

Documentation

- Flow Measurement (FA005D/06)
- Operating Instructions Promag Promag 50 (BA046D/06 and BA049D/06)
- Operating Instructions Promag Promag 50 PROFIBUS PA (BA055D/06 and BA056D/06)
- Operating Instructions Promag Promag 53 (BA047D/06 and BA048D/06)
- Operating Instructions Promag Promag 53 FOUNDATION Fieldbus (BA051D/06 and BA052D/06)
- Operating Instructions Promag Promag 53 MODBUS RS485 (BA117D/06 and BA118D/06)
- Operating Instructions Promag Promag 53 PROFIBUS DP/PA (BA053D/06 and BA054D/06)
- Supplementary documentation on Ex-ratings: ATEX, IECEx, FM, CSA, NEPSI

Registered trademarks

HART®
Registered trademark of the HART Communication Foundation, Austin, USA

PROFIBUS®
Registered trademark of the PROFIBUS Nutzerorganisation e.V., Karlsruhe, D

FOUNDATION™ Fieldbus
Registered trademark of the Fieldbus Foundation, Austin, USA

MODBUS®
Registered trademark of the MODBUS Organisation

HistoROM™, S-DAT®, T-DAT™, F-CHIP®, FieldCare®, Fieldcheck®, FieldXpert™, Applicator®
Registered or registration-pending trademarks of Endress+Hauser Flowtec AG, Reinach, CH

Order Codes

NOTE: Endress+Hauser reserves the right to change or modify product, specifications, and ordering information at any time without notice.
Please consult Endress+Hauser or your local representative for the most recent information.

Please note that the Promag 50W/53W is also available with:
- Hard rubber and Polyurethane liners; ACS, KTW/W270 and WRAS B59620 approvals
- PED Cat. II / III material certificates
- ATEX and NEPSI hazardous area approvals
- DIN2501 and JIS B2220 process connections

Consult factory for information.

Promag 50W, 1" to 24"

Promag 50W [ ][ ] - [ ] [ ] [ ] [ ] [ ] [ ] [ ] [ ] [ ] [ ] [ ] [ ]
010 020 030 040 050 060 070 080 090 100 110 120

Nominal Diameter
- 25 1"
- 40 1-1/2"
- 50 2"
- 80 3"
- 1H 4"
- 1F 6"
- 2H 8"
- 2F 10"
- 3H 12"
- 3F 14"
- 4H 16"
- 4F 18"
- 5H 20"
- 6H 24"

010 Liner
- D Hard rubber, NSF61 drinking water approval (not available for 1", 1-1/2" or 2" sensors)
- H Hard rubber (not available for 1", 1-1/2" or 2" sensors)
- P Polyurethane, NSF61 drinking water approval
- S Hard rubber HR (not available for 1", 1-1/2" or 2" sensors)
- U Polyurethane
- 9 Special version, to be specified

020 Process connection
- L Class 150 ANSI B16.5 CS steel A105 flanges
- M Class 300 ANSI B16.5 CS steel A105 flanges (not for 8" and larger)
- R Class 150 ANSI B16.5 316L SS flanges
- S Class 300 ANSI B16.5 316L SS flanges (not for 8" and larger)
- 9 Special version, to be specified

030 Electrodes / material
- 0 Measuring, reference and EPD electrodes / 316L SS
- 1 Measuring, reference and EPD electrodes / Alloy C22
- 2 Measuring, reference and EPD electrodes / tantalum
- 7 Measuring electrode, exchangeable / 316L SS (for hard rubber liner only, 14" and larger sensors, no EPD or reference electrodes, for safe areas only)
- G Measuring, reference and EPD electrodes, bullet nose / 316L SS
- H Measuring, reference and EPD electrodes, bullet nose / Alloy C-22
- 9 Special version, to be specified

040 Calibration
- A 3-point calibration, 0.5%
- B 3-point calibration, 0.2%
- D SCS/A2LA 3-point 0.5% calibration (ISO/IEC 17025) with certificate traceable according to ISO 9000 (specify range)
- E SCS/A2LA 3-point 0.2% calibration (ISO/IEC 17025) with certificate traceable according to ISO 9000 (specify range)
- 9 Special version, to be specified

050 Certificates
- 1 Standard, no certificate
- 2 3.1B material certificate for pipe and flanges
- 3 2.3 pressure test certificate (1.5 x PN, 3 minutes) for sensors up to 12" only
- 4 3.1B material and 2.3 pressure test certificate for sensors up to 12" only
- 5 CRN approval
- 8 CRN approval + material certificate + pressure test
- 9 Special version, to be specified

060 Approvals
- A For use in non-hazardous areas
- N FM explosion proof Class I, Div. 1 / CSA Class I, Div. 1 (only for aluminum field housing, compact version, not for 14" and larger sensors)
- R FM non-incendive Class I, Div. 2 / CSA Class I, Div. 2

070 Housing
- A NEMA 4X (IP 67) compact aluminum housing
- C NEMA 4X (IP 67) remote wall-mounted (only for approvals A or R)
- G NEMA 4X (IP 67) remote aluminum field housing for non-hazardous areas
- K NEMA 6P sensor, wall-mounted housing (only for approvals A or R)
- N NEMA 6P sensor, aluminum field housing, non-hazardous
- P NEMA 4X (IP 67) compact aluminum housing, HE (harsh environment), compact and remote sensor sizes up to 12" only *
- S NEMA 4X (IP 67) remote wall-mounted housing, HE (harsh environment), remote sensor sizes 14" to 78" (only for approvals A and R) *
- 1 -40°F (-40°C) ambient temperature, NEMA 4X (IP 67), compact, aluminum field housing (only for approvals A and R)
- 3 -40°F (-40°C) ambient temperature, NEMA 4X (IP 67), compact (only for approvals A and R)
- 5 -40°F (-40°C) ambient temperature, NEMA 4X (IP 67) wall mount housing, for NEMA 6P sensor (only for approvals A and R)
- 9 Special version, to be specified

080 Cable for remote
- 0 Without cable
- 1 15 foot coil and signal cable
- 2 30 foot coil and signal cable
- 5 Coil and signal cable, specify length (maximum 650 ft depending on conductivity of process material)
- 7 Coil and signal cable, flexible conduit, specify length (maximum 650 ft depending on conductivity of process material)
- 9 Special version, to be specified

090 Cable entries
- B 1/2" NPT
- L 1/2" NPT fieldbus connector (only for approval A and R)
- 9 Special version, to be specified

100 Power supply / display
- 7 85 to 260 VAC, without display, remote configuration only (not for wall mount or SS housing)
- 8 20 to 55 VAC / 16 to 62 VDC, without display, remote configuration only (not for wall mount or SS housing)
- A 85 to 260 VAC, with display, push button operation (language: EN, ES, FR, IT, NL, PT, DE)
- B 20 to 55 VAC / 16 to 62 VDC, with display, push button operation (language: EN, ES, FR, IT, NL, PT, DE)
- X Sensor only (without transmitter, only available up to 8")
- 9 Special version, to be specified

110 Software
- A Standard software
- X Sensor only (up to 8" only)
- 9 Special version, to be specified

120 Outputs / Inputs
- A Current HART, SIL, frequency
- D Current HART, SIL, frequency, status output, status input
- H PROFIBUS-PA (approvals A and R only)
- J PROFIBUS-DP (approvals A and R only)
- S Current HART, SIL, frequency; active I.S. (not for approvals A and R)
- T Current HART, SIL, frequency; passive I.S. (not for approvals A and R)
- W Current HART, SIL
- X Sensor only
- 9 Special version, to be specified

* Harsh environment (HE) option is available for process conditions where cool process temperatures in tropical (high humidity) environments or process fluids which undergo large cyclical temperature variations which can cause high amounts of moisture that could condense onto the measurement tube.

Promag 50W, 28” to 78”

		010	020	030	040	050	060	070	080	090	100	110	120
Promag 50W	-												

Nominal Diameter
- 7H 28”
- 7F 30”, AWWA
- 8H 32”
- 9H 36”
- TO 40”
- VO 42”, AWWA
- T2 48”
- V3 54”, AWWA
- V5 60”, AWWA
- V6 66”, AWWA
- T8 72”
- V9 78”, AWWA

010 Liner
- D Hard rubber, NSF61 drinking water approval
- H Hard rubber
- P Polyurethane, NSF61 drinking water approval (not available for 42” up to 78”)
- S Hard rubber HR
- U Polyurethane (not available for 42” up to 78”)
- 9 Special version, to be specified

020 Process connection
- P Class D AWWA carbon steel A105 flanges
- 9 Special version, to be specified

030 Electrodes / material
- 0 Measuring, reference and EPD electrodes / 316L SS
- 1 Measuring, reference and EPD electrodes / Alloy C22
- 2 Measuring, reference and EPD electrodes / tantalum
- 7 Measuring electrode, exchangeable / 316L SS (for hard rubber liner only, 14” and larger sensors, no EPD or reference electrodes, for safe areas only)
- G Measuring, reference and EPD electrodes, bullet nose / 316L SS
- H Measuring, reference and EPD electrodes, bullet nose / Alloy C-22
- 9 Special version, to be specified

040 Calibration
- A 3-point calibration, 0.5%
- B 3-point calibration, 0.2%
- D SCS/A2LA 3-point 0.5% calibration (ISO/IEC 17025) with certificate traceable according to ISO 9000 (specify range)
- E SCS/A2LA 3-point 0.2% calibration (ISO/IEC 17025) with certificate traceable according to ISO 9000 (specify range)
- 9 Special version, to be specified

050 Certificates
- 1 Standard, no certificate
- 2 3.1B material certificate for pipe and flanges
- 9 Special version, to be specified

060 Approvals
- A For use in non-hazardous areas
- R FM non-incendive Class I, Div. 2 / CSA Class I, Div. 2

070 Housing
- A NEMA 4X (IP 67) compact aluminum housing
- C NEMA 4X (IP 67) remote wall-mounted (only for approvals A or R)
- G NEMA 4X (IP 67) remote aluminum field housing for non-hazardous areas
- K NEMA 6P sensor, wall-mounted housing (only for approvals A or R)
- S NEMA 4X (IP 67) remote wall-mounted housing, HE (harsh environment), remote sensor sizes 14” to 78” (only for approvals A and R) *
- 1 -40°F (-40°C) ambient temperature, NEMA 4X (IP 67), compact, aluminum field housing (only for approvals A and R)
- 3 -40°F (-40°C) ambient temperature, NEMA 4X (IP 67), compact (only for approvals A and R)
- 5 -40°F (-40°C) ambient temperature, NEMA 4X (IP 67) wall mount housing, for NEMA 6P sensor (only for approvals A and R)
- 9 Special version, to be specified

080 Cable for remote
- 0 Without cable
- 1 15 foot coil and signal cable
- 2 30 foot coil and signal cable
- 5 Coil and signal cable, specify length (maximum 650 ft depending on conductivity of process material)
- 7 Coil and signal cable, flexible conduit, specify length (maximum 650 ft depending on conductivity of process material)
- 9 Special version, to be specified

090 Cable entries
- B 1/2” NPT
- L 1/2” NPT fieldbus connector (only for approval A and R)
- 9 Special version, to be specified

100 Power supply / display
- 7 85 to 260 VAC, without display, remote configuration only (not for wall mount or SS housing)
- 8 20 to 55 VAC / 16 to 62 VDC, without display, remote configuration only (not for wall mount or SS housing)
- A 85 to 260 VAC, with display, push button operation (language: EN, ES, FR, IT, NL, PT, DE)
- B 20 to 55 VAC / 16 to 62 VDC, with display, push button operation (language: EN, ES, FR, IT, NL, PT, DE)
- X Sensor only (without transmitter, only available up to 8”)
- 9 Special version, to be specified

110 Software
- A Standard software
- 9 Special version, to be specified

120 Outputs / Inputs
- A Current HART, SIL, frequency
- D Current HART, SIL, frequency, status output, status input
- H PROFIBUS-PA (approvals A and R only)
- J PROFIBUS-DP (approvals A and R only)
- S Current HART, SIL, frequency; active I.S. (not for approvals A and R)
- T Current HART, SIL, frequency; passive I.S. (not for approvals A and R)
- W Current HART, SIL
- X Sensor only
- 9 Special version, to be specified

* Harsh environment (HE) option is available for process conditions where cool process temperatures in tropical (high humidity) environments or process fluids which undergo large cyclical temperature variations which can cause high amounts of moisture that could condense onto the measurement tube.

Promag 53W, 1" to 24"

Promag 53W [ ] - [ ] [ ] [ ] [ ] [ ] [ ] [ ] [ ] [ ] [ ] [ ] [ ] [ ]

010 020 030 040 050 060 070 080 090 100 110 120

Nominal Diameter
- 25 1"
- 40 1-1/2"
- 50 2"
- 80 3"
- 1H 4"
- 1F 6"
- 2H 8"
- 2F 10"
- 3H 12"
- 3F 14"
- 4H 16"
- 4F 18"
- 5H 20"
- 6H 24"

010 Liner
- D Hard rubber, NFS61 drinking water approval (not available for 1", 1-1/2" or 2" sensors)
- H Hard rubber (not available for 1", 1-1/2" or 2" sensors)
- P Polyurethane, NSF61 drinking water approval
- S Hard rubber HR (not available for 1", 1-1/2" or 2" sensors)
- U Polyurethane
- 9 Special version, to be specified

020 Process connection
- L Class 150 ANSI B16.5 CS steel A105 flanges
- M Class 300 ANSI B16.5 CS steel A105 flanges (not for 8" and larger)
- R Class 150 ANSI B16.5 316L SS flanges
- S Class 300 ANSI B16.5 316L SS flanges (not for 8" and larger)
- 9 Special version, to be specified

030 Electrodes / material
- 0 Measuring, reference and EPD electrodes / 316L SS
- 1 Measuring, reference and EPD electrodes / Alloy C22
- 2 Measuring, reference and EPD electrodes / tantalum
- 7 Measuring electrode, exchangeable / 316L SS (for hard rubber liner only, 14" and larger sensors, no EPD or reference electrodes, for safe areas only)
- G Measuring, reference and EPD electrodes, bullet nose / 316L SS
- H Measuring, reference and EPD electrodes, bullet nose / Alloy C-22
- 9 Special version, to be specified

040 Calibration
- B 3-point calibration, 0.2%
- E SCS/A2LA 3-point, 0.2% calibration (ISO/IEC 17025) with certificate traceable according to ISO 9000 (specify range)
- 9 Special version, to be specified

050 Certificates
- 1 Standard, no certificate
- 2 3.1B material certificate for pipe and flanges
- 3 2.3 pressure test certificate (1.5 x PN, 3 minutes) for sensors up to 12" only
- 4 3.1B material and 2.3 pressure test certificate for sensors up to 12" only
- 5 CRN approval
- 8 CRN approval + material certificate + pressure test
- 9 Special version, to be specified

060 Approvals
- A For use in non-hazardous areas
- N FM explosion proof Class I, Div. 1 / CSA Class I, Div. 1 (only for aluminum field housing, compact version, not for 14" and larger sensors)
- R FM non-incendive Class I, Div. 2 / CSA Class I, Div. 2

070 Housing
- A NEMA 4X (IP 67) compact aluminum housing
- C NEMA 4X (IP 67) remote wall-mounted (only for approvals A or R)
- G NEMA 4X (IP 67) remote aluminum field housing for non-hazardous areas
- K NEMA 6P sensor, wall-mounted housing (only for approvals A or R)
- N NEMA 6P sensor, aluminum field housing, non-hazardous
- P NEMA 4X (IP 67) compact aluminum housing, HE (harsh environment), compact and remote sensor sizes up to 12" only *
- S NEMA 4X (IP 67) remote wall-mounted housing, HE (harsh environment), remote sensor sizes 14" to 78" (only for approvals A and R) *
- 1 -40°F (-40°C) ambient temperature, NEMA 4X (IP 67), compact, aluminum field housing (only for approvals A and R)
- 3 -40°F (-40°C) ambient temperature, NEMA 4X (IP 67), compact (only for approvals A and R)
- 5 -40°F (-40°C) ambient temperature, NEMA 4X (IP 67) wall mount housing, for NEMA 6P sensor (only for approvals A and R)
- 9 Special version, to be specified

080 Cable for remote
- 0 Without cable
- 1 15 foot coil and signal cable
- 2 30 foot coil and signal cable
- 5 Coil and signal cable, specify length (maximum 650 ft depending on conductivity of process material)
- 7 Coil and signal cable, flexible conduit, specify length (maximum 650 ft depending on conductivity of process material)
- 9 Special version, to be specified

090 Cable entries
- B 1/2" NPT
- L 1/2" NPT Fieldbus connector (only for approval A and R)
- 9 Special version, to be specified

100 Power supply / display
- 7 85 to 260 VAC, without display, remote configuration only (not for wall mount or SS housing)
- 8 20 to 55 VAC / 16 to 62 VDC, without display, remote configuration only (not for wall mount or SS housing)
- A 85 to 260 VAC, with display, push button operation (language: EN, ES, FR, IT, NL, PT, DE)
- B 20 to 55 VAC / 16 to 62 VDC, with display, push button operation (language: EN, ES, FR, IT, NL, PT, DE)
- X Sensor only (without transmitter, only available up to 8")
- 9 Special version, to be specified

110 Software
- A Standard software
- C ECC electrode cleaning circuit (only for approvals A and R)
- 9 Special version, to be specified

120 Outputs / Inputs

Fixed communication boards
- A Current HART, SIL, frequency
- B Current HART, SIL, frequency, 2 relays
- F PROFIBUS-PA, IS
- G Foundation Fieldbus, IS
- H PROFIBUS-PA
- J PROFIBUS-DP
- K Foundation Fieldbus
- Q Modbus RS485, status input
- S Current HART, SIL, frequency; active I.S
- T Current HART, SIL, frequency; passive I.S

Flexible communication boards
- C Current HART, SIL, frequency, 2 relays, flexible module
- D Current HART, SIL, frequency, relay, and status input, flexible module
- L Current HART, SIL, 2 relays and status input/output
- M Current HART, SIL, 2 frequency output, status input
- N Modbus RS 485, current and frequency output, status input
- P PROFIBUS-DP, current and frequency output, status input
- V PROFIBUS-DP, two relay outputs, status input
- 2 Current HART, SIL, relay, current, frequency ouputs
- 4 Current HART, SIL, relay, frequency outputs, current input
- 7 Modbus RS485, two relay outputs, status input
- X Sensor only
- 9 Special version, to be specified

* Harsh environment (HE) option is available for process conditions where cool process temperatures in tropical (high humidity) environments or process fluids which undergo large cyclical temperature variations which can cause high amounts of moisture that could condense onto the measurement tube.

Promag 53W, 28” to 78”

Promag 53W [ ] - [010] [020] [030] [040] [050] [060] [070] [080] [090] [100] [110] [120]

Nominal Diameter
- 7H 28”
- 7F 30”, AWWA
- 8H 32”
- 9H 36”
- TO 40”
- VO 42”, AWWA
- T2 48”
- V3 54”, AWWA
- V5 60”, AWWA
- V6 66”, AWWA
- T8 72”
- V9 78”, AWWA

010 Liner
- D Hard rubber, NSF61 drinking water approval
- H Hard rubber
- P Polyurethane, NSF61 drinking water approval (not available for 42” to 78” sensors)
- S Hard rubber HR
- U Polyurethane (not available for 42” to 78” sensors)
- 9 Special version, to be specified

020 Process connection
- P Class D AWWA carbon steel A105 flanges
- 9 Special version, to be specified

030 Electrodes / material
- 0 Measuring, reference and EPD electrodes / 316L SS
- 1 Measuring, reference and EPD electrodes / Alloy C22
- 2 Measuring, reference and EPD electrodes / tantalum
- 7 Measuring electrode, exchangeable / 316L SS (for hard rubber liner only, 14” and larger sensors, no EPD or reference electrodes, for safe areas only)
- G Measuring, reference and EPD electrodes, bullet nose / 316L SS
- H Measuring, reference and EPD electrodes, bullet nose / Alloy C-22
- 9 Special version, to be specified

040 Calibration
- B 3-point calibration, 0.2%
- E SCS/A2LA 3-point 0.2% calibration (ISO/IEC 17025) with certificate traceable according to ISO 9000 (specify range)
- 9 Special version, to be specified

050 Certificates
- 1 Standard, no certificate
- 2 3.1B material certificate for pipe and flanges
- 9 Special version, to be specified

060 Approvals
- A For use in non-hazardous areas
- R FM non-incendive Class I, Div. 2 / CSA Class I, Div. 2

070 Housing
- A NEMA 4X (IP 67) compact aluminum housing
- C NEMA 4X (IP 67) remote wall-mounted (only for approvals A or R)
- G NEMA 4X (IP 67) remote aluminum field housing for non-hazardous areas
- K NEMA 6P sensor, wall-mounted housing (only for approvals A or R)
- S NEMA 4X (IP 67) remote wall-mounted housing, HE (harsh environment), remote sensor sizes 14” to 78” (only for approvals A and R) *
- 1 -40°F (-40°C) ambient temperature, NEMA 4X (IP 67), compact, aluminum field housing (only for approvals A and R)
- 3 -40°F (-40°C) ambient temperature, NEMA 4X (IP 67), compact (only for approvals A and R)
- 5 -40°F (-40°C) ambient temperature, NEMA 4X (IP 67) wall mount housing, for NEMA 6P sensor (only for approvals A and R)
- 9 Special version, to be specified

* Harsh environment (HE) option is available for process conditions where cool process temperatures in tropical (high humidity) environments or process fluids which undergo large cyclical temperature variations which can cause high amounts of moisture that could condense onto the measurement tube.

080 Cable for remote
- 0 Without cable
- 1 15 foot coil and signal cable
- 2 30 foot coil and signal cable
- 5 Coil and signal cable, specify length (maximum 650 ft depending on conductivity of process material)
- 7 Coil and signal cable, flexible conduit, specify length (maximum 650 ft depending on conductivity of process material)
- 9 Special version, to be specified

090 Cable entries
- B 1/2” NPT
- L 1/2” NPT Fieldbus connector (only for approval A and R)
- 9 Special version, to be specified

100 Power supply / display
- 7 85 to 260 VAC, without display, remote configuration only (not for wall mount or SS housing)
- 8 20 to 55 VAC / 16 to 62 VDC, without display, remote configuration only (not for wall mount or SS housing)
- A 85 to 260 VAC, with display, push button operation (language: EN, ES, FR, IT, NL, PT, DE)
- B 20 to 55 VAC / 16 to 62 VDC, with display, push button operation (language: EN, ES, FR, IT, NL, PT, DE)
- 9 Special version, to be specified

110 Software
- A Standard software
- C ECC electrode cleaning circuit (only for approvals A and R)
- 9 Special version, to be specified

120 Outputs / Inputs
Fixed communication boards
- A Current HART, SIL, frequency
- B Current HART, SIL, frequency, 2 relays
- F PROFIBUS-PA, IS
- G Foundation Fieldbus, IS
- H PROFIBUS-PA
- J PROFIBUS-DP
- K Foundation Fieldbus
- Q Modbus RS485, status input
- S Current HART, SIL, frequency; active I.S
- T Current HART, SIL, frequency; passive I.S

Flexible communication boards
- C Current HART, SIL, frequency, 2 relays, flexible module
- D Current HART, SIL, frequency, relay, and status input, flexible module
- L Current HART, SIL, 2 relays and status input/output
- M Current HART, SIL, 2 frequency output, status input
- N Modbus RS 485, current and frequency output, status input
- P PROFIBUS-DP, current and frequency output, status input
- V PROFIBUS-DP, two relay outputs, status input
- 2 Current HART, SIL, relay, current, frequency outputs
- 4 Current HART, SIL, relay, frequency outputs, current input
- 7 Modbus RS485, two relay outputs, status input
- X Sensor only
- 9 Special version, to be specified

United States	Canada	Mexico	Instruments International
Endress+Hauser, Inc. 2350 Endress Place Greenwood, IN 46143 Tel. 317-535-7138 Sales 888-ENDRESS (888-363-7377) Service 800-642-8737 fax 317-535-8498 inquiry@us.endress.com www.us.endress.com	Endress+Hauser Canada 1075 Sutton Drive Burlington, ON L7L 5Z8 Tel. 905-681-9292 800-668-3199 Fax 905-681-9444 info@ca.endress.com www.ca.endress.com	Endress+Hauser, México, S.A. de C.V. Fernando Montes de Oca 21 Edificio A Piso 3 Fracc. Industrial San Nicolás 54030. Tlalnepantla de Baz Estado de México México Tel: +52 55 5321 2080 Fax +52 55 5321 2099 eh.mexico@mx.endress.com www.mx.endress.com	Endress+Hauser Instruments International AG Kaegenstrasse 2 4153 Reinach Switzerland Tel. +41 61 715 81 00 Fax +41 61 715 25 00 www.endress.com info@ii.endress.com

TI046D/24/en/07.10
© 2010 Endress+Hauser, Inc.

Endress+Hauser

People for Process Automation