Level | Pressure | Flow | Temperature | Liquid Analysis | Registration | Systems Components | Services | Solutions

Technical Information

Ceramax CPS341D

Electrode with pH sensitive enamel and digital Memosens technology Meets highest demands of measuring accuracy, pressure, temperature, sterility and durability



Application

- Food production, also highly pasty media
- Beverage production and filling
- Quality control
- Pharmaceutical industry:
  - Water treatment
  - Active ingredient production
  - Active ingredient preparation
  - Fermentation
  - Biotechnology

Your benefits

- Continuous online measurement is possible in the ongoing process
- Direct installation in container nozzles or piping
- Self-cleaning by the flowing medium
- Long-term stability over many years
- High mechanical loading capacity due to a steel substrate
- Extremely corrosion-resistant to acids
- Hygienic design: Inline CIP and SIP-capable

Further benefits offered by Memosens technology

- Maximum process safety through contactless inductive signal transmission
- Data safety through digital data transmission
- Easy handling thanks to storage of sensor-specific data in the sensor
- Predictive maintenance possible thanks to registration of sensor load data in the sensor

TI468C/07/EN/06.10
71114968

Endress+Hauser
People for Process Automation

Function and system design

Measuring principle

pH measurement
The pH value is a measure of the acid or base character of a medium. Depending on the pH value of the medium, the electrode's pH-sensitive enamel provides an electrochemical potential. This is the result of H^+ ions selectively penetrating the outer layer of the enamel. As a result, an electrochemical boundary layer forms here with an electric potential. An integrated Ag/AgCl reference system forms the required reference electrode. The transmitter converts the measured voltage into the corresponding pH value according to the NERNST equation.

General properties

Mechanical stability
The substrate of the sensor is steel. That makes the sensor mechanically stable when confronted with solids and turbulent flows from agitators. To protect the steel from corrosion and product deposits, it is covered with highly resistant enamel.

Working electrode
The working electrode consists of yellow, pH-sensitive enamel that is melted onto a large area of the lower end of the sensor in the shape of a ring. This ensures an area many times larger compared to pH glass electrodes or ISFET sensors.
The working electrode is connected directly to the metallic reference lead. An inner buffer is not necessary.

Reference electrode
The Ag/AgCl reference electrode is integrated into the head of the sensor. A sterile 3M KCl solution is used as an electrolyte. This also contains an inhibitor that prevents the reference from aging and thus enables the long operating life.
The electrolyte CPS341Z-D5 is delivered in PE bottles with septum and simply used in the stainless steel electrolyte vessel CPS341Z-D1.
The conductive connection between reference and medium guarantees a shrunk, aseptic ground joint diaphragm.
The pressure in the reference system must be continuously above the operating pressure.

Easy installation
The sensor is installed, without a basket protector or additional assembly, directly in container nozzles or in the main stream of piping. The orientation can be selected at random.
The sensor remains in the process room permanently, even in empty containers.

Durability and calibration cycles

The sensor is factory-calibrated and ready for measurement immediately after being connected to a transmitter with Memosens functionality.
Due to the mechanical design, aging of the sensor is very minor and there is no measuring error.
In most applications it is sufficient for the sensor to be adjusted once a year with a sample calibration.

Important properties

Maximum process safety
The inductive and non-contacting measured value transmission of Memosens guarantees maximum process safety and offers the following benefits:

- All problems caused by moisture are eliminated.
  - The plug-in connection is non-contacting and therefore free from corrosion.
  - Measured value distortion from moisture is not possible.
  - The plug-in system can even be connected under water.
- The transmitter is galvanically decoupled from the medium. The result: No more need to ask about "symmetrically high-impedance" or "unsymmetrical" (for pH/ORP measurement) or an impedance converter.
- EMC safety is guaranteed by screening measures for the digital measured value transmission.

Data safety through digital data transfer
The Memosens technology digitalizes the measured values in the sensor and transfers them to the transmitter contactlessly and free from interference potential. The result:

- An automatic error message is generated if the sensor fails or the connection between sensor and transmitter is interrupted.
- The availability of the measuring point is dramatically increased by immediate error detection.

Communication with the transmitter
Always connect digital sensors to a transmitter with Memosens technology. Data transmission to a transmitter for analog sensors is not possible.

Data storage

The sensor is connected to the cable connection (CYK10) without contact. The power and data are transferred inductively

Once connected to the transmitter, the data saved in the sensor are read digitally. You can call up these data using the corresponding DIAG menu.

Data that digital sensors save include the following:
- Manufacturer data
  - Serial number
  - Order code
  - Date of manufacture
- Calibration data
  - Calibration date
  - Calibration values
  - Number of calibrations
  - Serial number of the transmitter used to perform the last calibration
- Operational data
  - Date of commissioning
  - Hours of operation under extreme conditions
  - Number of sterilizations
  - Data for sensor monitoring.

Measuring system

A complete measuring system comprises:
- Ceramax CPS341D pH sensor
- Transmitter, e.g. Liquiline CM42
- CYK10 measuring cable

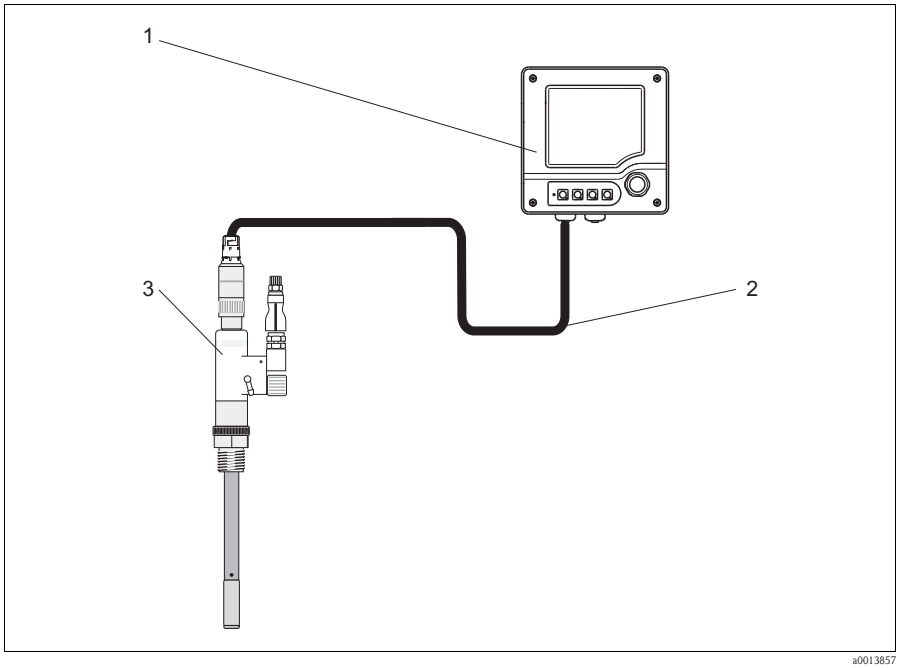

Measuring system

4 CM42 transmitter
3 CYK10 measuring cable
2 CPS341D pH sensor

Input

Measured variables

pH value
Temperature

Measuring range

0 to 10 pH (linear range)
-2 to 14 pH (application range)
0 to 140 °C (32 to 280 °F)

Installation

Installation position

CPS341D can be installed in any position.

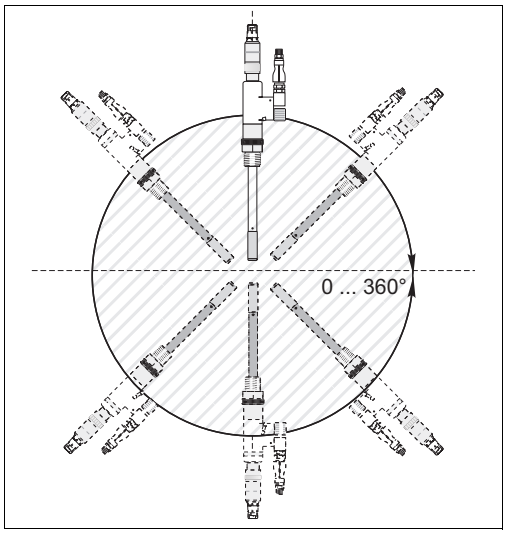

Fig. 1: Installation position

Environment

Ambient temperature range	The sensor must not be used at temperatures below 0 °C (32 °F).
Storage temperature	0 to 50 °C (32 to 120 °F)
Degree of protection	IP 68 (10 m (33 ft) water column, 25 °C (77 °F), 45 days, 1 M KCl)
Electromagnetic compatibility	Interference emission and interference immunity as per EN 61326: 2006

Process

Process temperature	0 to 140 °C (32 to 280 °F)
Process pressure	0 to 6 bar (0 to 87 psi)
Minimum conductivity	50 µS/cm
pH range	-2 to 14 pH

Mechanical construction

Dimensions

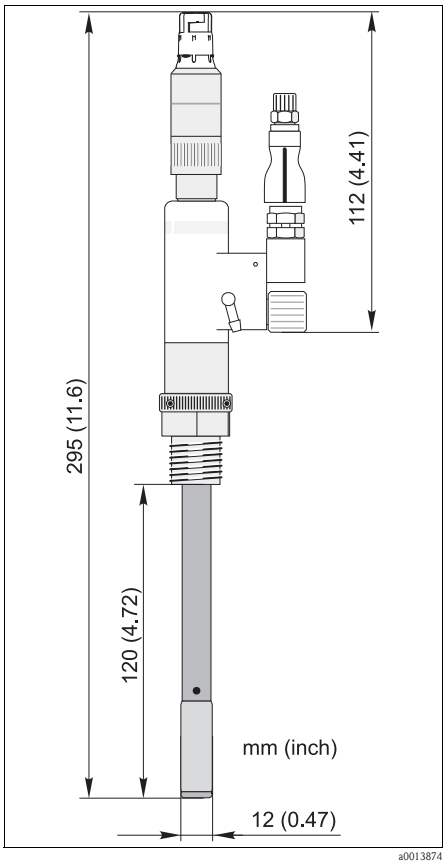

Dimensions

Weight

600 g (1.3 lbs)

Material

Sensor body:	Porcelain enamel metal substrate (PEMS), chemically resistant and shock resistant
Adapter and plug-in head:	Stainless steel 1.4404 (AISI 316 L), PVDF, PTFE
Electrolyte vessel:	Stainless steel 1.4301 (AISI 304)
Process connection adapters:	Stainless steel 1.4404 (AISI 316 L)

Process connections

M20
Pg 13.5
3/4"
1"
Nozzle, DN25
Nozzle, DN30
Varivent DN50/40
Dairy pipe DN50
Dairy pipe DN25
Triclamp DN50

Temperature sensor

NTC 30KΩ

Reference system

Ag/AgCl with 3 M KCl and inhibitor

Ordering information

Product structure

	Version				
	7	Basic			
		Application range			
		A	0 to 10 pH, 0 to 140 °C (32 to 280 °F), 0 to 6 bar (0 to 87 psi)		
			Process connection adapter		
			1A	Without	
			1B	M20	
			1C	Pg 13.5	
			1D	3/4"	
			1E	1"	
			1F	Nozzle DN25	
			1G	Nozzle DN30	
			1H	Varivent DN50/40	
			1K	Dairy pipe DN50	
			1L	Dairy pipe DN25	
			1M	Triclamp, compatible to DN50	
				Approval	
				1	Non-Ex area
CPS341D-					complete order code

Accessories

In the following sections, you find the accessories available at the time of issue of this documentation. For information on accessories that are not listed here, please contact your local service or sales representation.

CPS341Z

Correct function of Ceramax CPS341D depends on reliable supply of KCl to the reference part of the sensor. The pressurized electrolyte vessel CPS341Z-D1 is best suited for this.

The electrolyte supply can be monitored by the ultrasonic sensor for level monitoring CPS341Z-D2 (air bubble sensor). The ultrasonic sensor requires a supply voltage of 18 to 30 V DC at a max. of 70 mA (without switching current).
The signal is output via the relay CPS341Z-D4 as well as optically via the LED display CPS341Z-D3.

	Accessories for Ceramax CPS341D
A1	Welding nozzle DN30, straight
A2	Dummy plug for welding nozzle DN30
A3	Welding nozzle DN25, straight
A4	Welding nozzle DN25, inclined
D1	Electrolyte vessel, stainless steel
D2	Ultrasonic sensor level monitoring
D3	Cable with LED display
D4	Relay, type KCD2-R, P+F
D5	KCl electrolyte, sterile, 1 l plastic bottle
D6	Purified water, sterile, 1 l plastic bottle
D7	Plastic bottle, empty
D8	Protection cap

CPS341Z-	

To obtain a valid order code, simply attach the optional features to the order code. If you have any questions, please contact our sales office.

Transmitters

Liquiline CM44x
- Multiple-channel transmitter for the connection of digital sensors with Memosens technology
- Power supply: 85 to 265 V AC, 18 to 36 V DC or 20 to 28 V AC (not CM448)
- Universally upgradeable
- SD card slot
- Alarm relay
- IP 66
- Ordering acc. to product structure (Technical Information TI444C/07/en)

Liquiline CM42
- Modular two-wire transmitter for Ex and non-Ex areas
- Hart®, PROFIBUS or FOUNDATION Fieldbus available
- Ordering acc. to product structure, Technical Information TI381C/07/en

Mycom S CPM153
- Transmitter for pH and redox, one or two channel version, Ex or Non-Ex
- HART or PROFIBUS available
- Ordering acc. to product structure, Technical Information TI233C/07/en

Buffer solutions

High-quality buffer solutions of Endress+Hauser - CPY20
The secondary buffer solutions have been referenced to primary reference material of the PTB (German Federal Physico-technical Institute) and to standard reference material of NIST (National Institute of Standards and Technology) according to DIN 19266 by a DKD (German Calibration Service) accredited laboratory.

	pH value	
	A	pH 2.00 (accuracy ± 0.02 pH)
	C	pH 4.00 (accuracy ± 0.02 pH)
	E	pH 7.00 (accuracy ± 0.02 pH)
	G	pH 9.00 (accuracy ± 0.02 pH)
	I	pH 9.20 (accuracy ± 0.02 pH)
	K	pH 10.00 (accuracy ± 0.05 pH)
	M	pH 12.00 (accuracy ± 0.05 pH)

		Quantity	
		01	20 x 18 ml (0.68 fl.oz) only buffer solutions pH 4.00 and 7.00
		02	250 ml (8.45 fl.oz)
		10	1000 ml (0.26 US gal)
		50	5000 ml (1.32 US gal) canister for Topcal S

			Certificates	
			A	Buffer analysis certificate

				Version	
				1	Standard

CPY20-						complete order code

Measuring cables

CYK10 Memosens data cable
- For digital sensors with Memosens technology
- Ordering according to product structure, see Technical Information (TI376C/07/en)

Instruments International

Endress+Hauser
Instruments International AG
Kaegenstrasse 2
4153 Reinach
Switzerland

Tel.+41 61 715 81 00
Fax+41 61 715 25 00
www.endress.com
info@ii.endress.com

Endress+Hauser

People for Process Automation

TI468C/07/EN/06.10
71114968
FM9