Füllstand Druck Durchfluss Temperatur Flüssigkeits-analyse Registrierung Systeme Komponenten Services Solutions

Operating Instructions

Liquicap M FMI51, FMI52 FEI57C PFM

Capacitance level measurement

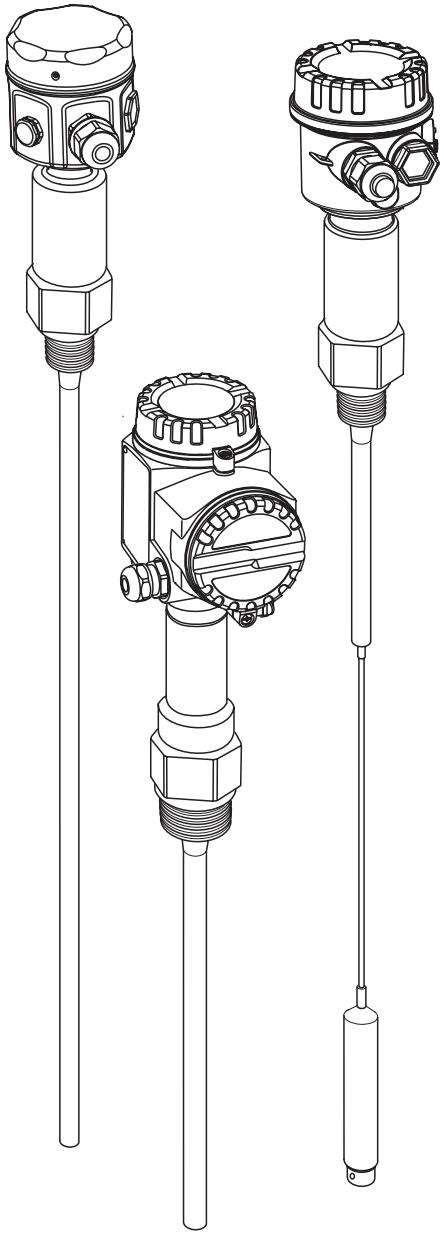

BA00297F/00/EN/13.10
71128821

Valid as of software version:
FW: V 01.00.00
HW: V 01.00

Endress+Hauser

People for Process Automation

Table of contents

1 Safety instructions 3

1.1 Designated use 3
1.2 Installation, commissioning and operation 3
1.3 Operational safety 3
1.4 Notes on safety conventions and icons 4

2 Identification 5

2.1 Device designation 5
2.2 Scope of delivery 12
2.3 Certificates and approvals 12
2.4 Trademarks 12

3 Installation 13

3.1 Quick installation guide 13
3.2 Incoming acceptance, transport, storage 13
3.3 Planning instructions 14
3.4 Measuring condition 15
3.5 Minimum probe length for nonconductive media (<1µs/cm) 16
3.6 Installation examples 16
3.7 With separate housing 21
3.8 Installation instructions 24
3.9 Post-installation check 26

4 Wiring. 27

4.1 Recommendations for connection 27
4.2 Wiring and connecting 28
4.3 Post-connection check 31

5 Operation 32

5.1 Operating options 32
5.2 Display and operating elements 32
5.3 Error messages 32

6 Commissioning. 33

6.1 Function check 33
6.2 Transmitter 33

7 Maintenance. 34

8 Accessories. 35

8.1 Protective cover 35
8.2 Shortening set for FMI52 35
8.3 Commubox FXA195 HART 35
8.4 HAW56x surge arrester 35
8.5 Weld-in adapter 35

9 Troubleshooting 35

9.1 Error analysis. 35
9.2 Application errors 36
9.3 Possible measuring errors 36
9.4 Spare Parts 37
9.5 Return 37
9.6 Disposal 38
9.7 Software history 38
9.8 Contact addresses at Endress+Hauser 38

10 Technical data 38

10.1 Technical data: probe 38
10.2 Input 39
10.3 Output 39
10.4 Performance characteristics 39
10.5 Power supply 41
10.6 Operating conditions: Environment 42
10.7 Operating conditions: Process 44
10.8 Certificates and approvals 46
10.9 Documentation 47

Index 49

1 Safety instructions

1.1 Designated use

Liquicap M FMI51, FMI52 are compact, capacitance level transmitters for the continuous measurement of liquids.

1.2 Installation, commissioning and operation

Liquicap M is designed to meet state-of-the-art safety regulations and complies with the applicable requirements and EC Directives. If used improperly or other than intended, the device can, however, be a source of application-related danger, e.g. product overflow as a result of incorrect installation or configuration. For this reason, installation, electrical connection, commissioning, operation and maintenance of the measuring system must only be carried out by trained technical personnel authorized to perform such work by the owner-operator. The technical personnel must have read and understood these Operating Instructions and must follow the instructions they contain. The device may only be repaired or modified if expressly permitted in the Operating Instructions.

1.3 Operational safety

When performing configuration, testing and maintenance work on the device, alternative supervisory measures must be taken to guarantee the operational safety and process safety.

1.3.1 Ex area

When using the measuring system in Ex-areas, the appropriate national standards and regulations have to be observed. Separate Ex documentation, which constitutes an integral part of this documentation, is supplied with the device. The installation procedures, connection data and safety instructions it contains must be observed.

- Make sure that the technical staff has adequate training.
- The special measuring and safety-related requirements for the measuring points must be observed.

1.4 Notes on safety conventions and icons

To highlight safety-related or alternative processes, we have designed the following safety instructions where every instruction is indicated by a corresponding pictogram.

Safety instructions	
	**Warning!** Draws attention to activities or procedures that can result in serious injuries to persons, a safety risk or the destruction of the device if not carried out properly.
	**Caution!** Draws attention to activities or procedures that can result in injuries to persons or the defective operation of the device if not carried out properly.
	**Note!** Draws attention to activities or procedures that have an indirect effect on operation, or can trigger an unforeseen device reaction if not carried out properly.
Type of protection	
	**Explosion-protected equipment tested for type examination** If this sign can be found on the nameplate of the device, the device can be operated in hazardous areas or non-hazardous areas in accordance with the approval
	**Ex area** This symbol in the drawings in these Operating Instructions indicates Ex-areas. Devices located in Ex-areas, or cables for such devices, must have appropriate explosion protection.
	**Safe area (non-hazardous area)** This symbol in the drawings in these Operating Instructions indicates non-Ex areas. Devices in non-hazardous areas must also be certified if connecting cables lead into hazardous areas.
Electrical symbols	
	**Direct current** A terminal to which direct voltage is applied or through which the direct current flows.
	Alternating current A terminal to which alternating voltage (sine wave) is applied or through which the alternating current flows.
	**Ground connection** A grounded terminal which, from a user's point of view, is grounded via a grounding system.
	**Protective earth connection** A terminal that has to be grounded before any other connections may be established.
	**Equipotential connection** A connection that has to be connected to the grounding system of the plant. This can be a potential matching line or a star grounding system, depending on national or company codes of practice.
	**Immunity to temperature change of the connecting cables** Means that the connecting cables have to withstand a temperature of 85 °C at least.

2 Identification

2.1 Device designation

2.1.1 Nameplate

You can take the following technical data from the nameplate of the device:

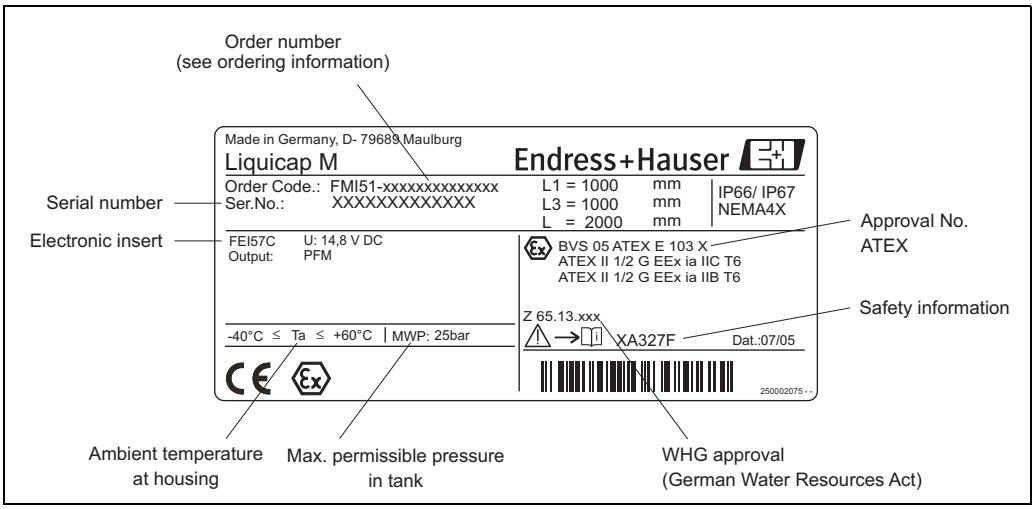

Information on the Liquicap M nameplate (example)

2.1.2 Product structure

Note!
The product structure is used to identify the alphanumeric order number (see nameplate: Order Code).

Liquicap M FMI51 (device identification)

10	Approval:		
	A	Non-hazardous area	
	B	Non-hazardous area,	WHG
	C	ATEX II 1/2 GD Ex ia IIC T6	
	D	ATEX II 1/2 GD Ex ia IIC T6,	WHG
	E	ATEX II 1/2 GD Ex ia IIB T6	
	F	ATEX II 1/2 GD Ex ia IIB T6,	WHG
	G	ATEX II 1/2 G Ex d (ia) IIB T6,	WHG
	H	ATEX II 1/2 GD Ex ia IIC T6,	
		XA, note safety instruction (XA) (electrostatic charging)!	
	J	ATEX II 1/2 GD Ex ia IIC T6,	WHG
		XA, note safety instruction (XA) (electrostatic charging)!	
	K	ATEX II 1/2 G Ex ia IIC T6,	WHG
		XA, note safety instruction (XA) (electrostatic charging)!	
	L	ATEX II 1/2 G Ex de (ia) IIC T6,	WHG
		XA, note safety instruction (XA) (electrostatic charging)!	
	M	ATEX II 3 GD Ex nA II T6,	WHG
		XA, note safety instruction (XA) (electrostatic charging)!	
	N	CSA General Purpose, CSA C US	
	P	CSA/FM IS Cl. I, II, III Div. 1+2 Gr. A-G	
	R	CSA/FM XP Cl. I, II, III Div. 1+2 Gr. A-G	
	S	TIIS Ex ia IIC T3	
	T	TIIS Ex d IIC T3	
	1	NEPSI Ex ia IIC T6	
	2	NEPSI Ex d(ia) IIC T6	
	4	NEPSI Ex nA IIC T6	
	5	IECEx Ga/Gb Ex ia IIC T6; Ex iaD 20/ Ex tD A21	

10	Approval:
6	IECEx Ga/Gb Ex ia IIC T6
Y	Special version, to be specified

20	Inactive Length L3:
	Price per 100 mm/1 inch
	L3: 100 to 2000 mm/4 to 80 inch for 316L
	L3: 150 to 1000 mm/6 to 40 inch for PTFE fully insulated
	Protection against condensate + bypassing container nozzles
1	Not selected
2	... mm, 316L
3	... mm, 316L + fully insulated PTFE
5	... inch, 316L
6	... inch, 316L + fully insulated PTFE
9	Special version, to be specified

30	Active Probe Length L1; Insulation:		
	Price per 100 mm/1 inch		
	L1: 100 to 4000 mm/4 to 160 inch for ∅10 mm, ∅16 mm		
	L1: 150 to 3000 mm/6 to 120 inch for ∅22 mm (fully insulated)		
A	... mm L1,	10 mm rod,	316L; PTFE
B	... mm L1,	16 mm rod,	316L; PTFE
C	... mm L1,	22 mm rod,	316L; PTFE
D	... mm L1,	16 mm rod,	316L; PFA
E	... mm L1,	10 mm rod,	316L; PTFE + ground tube
F	... mm L1,	16 mm rod,	316L; PTFE + ground tube
G	... mm L1,	16 mm rod,	316L; PFA + ground tube
H	... inch L1,	0.4 inch rod,	316L; PTFE
K	... inch L1,	0.6 inch rod,	316L; PTFE
M	... inch L1,	0.9 inch rod,	316L; PTFE
N	... inch L1,	0.6 inch rod,	316L; PFA
P	... inch L1,	0.4 inch rod,	316L; PTFE + ground tube
R	... inch L1,	0.6 inch rod,	316L; PTFE + ground tube
S	... inch L1,	0.6 inch rod,	316L; PFA + ground tube
Y	Special version, to be specified		

50	Process Connection:			∅ inactive length (mm)
	Threaded connection			
GCJ	G ½,	316L, 25 bar	Thread ISO228	22
GDJ	G ¾,	316L, 25 bar	Thread ISO228	22
GEJ	G 1,	316L, 25 bar	Thread ISO228	22
GGJ	G 1½,	316L, 100 bar	Thread ISO228	43
RCJ	NPT ½,	316L, 25 bar	Thread ANSI	22
RDJ	NPT ¾,	316L, 25 bar	Thread ANSI	22
REJ	NPT 1,	316L, 25 bar	Thread ANSI	22
RGJ	NPT 1½,	316L, 100 bar	Thread ANSI	43
	Hygiene connection			
GQJ	G ¾	316L, 25 bar, EHEDG	Thread ISO228	–
	Accessories installation, weld-in adapter			
GWJ	G 1	316L, 25 bar, EHEDG	Thread ISO228	–
	Accessories installation, weld-in adapter			
MRJ	DN50 PN40,	316L	DIN11851	22/43***
UPJ	Universal adapter 44 mm	316L, 16 bar		–
	Tri-Clamp connection			
TCJ	DN25 (1"), EHEDG	316L,	Tri-Clamp ISO2852	22
TJJ	DN38 (1½"), EHEDG	316L,	Tri-Clamp ISO2852	22
TJK	DN38 (1½"), EHEDG	PTFE >316L, 3A	Tri-Clamp ISO2852	22
TDJ	DN40-51 (2"),	316L,	Tri-Clamp ISO2852	43
TDK	DN40-51 (2"), EHEDG	PTFE >316L, 3A,	Tri-Clamp ISO2852	–
TNJ	DN38 (1½"), clamp detachable	316L, 3A, EHEDG	Tri-Clamp ISO2852	–
	EN flanges			
B0J	DN25 PN25/40 A,	316L	Flange EN1092-1 (DIN2527 B)	22
B1J	DN32 PN25/40 A,	316L	Flange EN1092-1 (DIN2527 B)	22
B2J	DN40 PN25/40 A,	316L	Flange EN1092-1 (DIN2527 B)	22

50	Process Connection:				∅ inactive length (mm)
	B3J	DN50 PN25/40 A,	316L	Flange EN1092-1 (DIN2527 B)	22/43***
	CRJ	DN50 PN25/40 B1,	316L	Flange EN1092-1 (DIN2527 C)	43
	DRJ	DN50 PN40 C,	316L	Flange EN1092-1 (DIN2512 F)	43
	ERJ	DN50 PN40 D,	316L	Flange EN1092-1 (DIN2512 N)	43
	BSJ	DN80 PN10/16 A,	316L	Flange EN1092-1 (DIN2527 B)	43
	CGJ	DN80 PN10/16 B1,	316L	Flange EN1092-1 (DIN2527 C)	43
	DGJ	DN80 PN16 C,	316L	Flange EN1092-1 (DIN2512 F)	43
	EGJ	DN80 PN16 D,	316L	Flange EN1092-1 (DIN2512 N)	43
	BTJ	DN100 PN10/16 A,	316L	Flange EN1092-1 (DIN2527 B)	43
	CHJ	DN100 PN10/16 B1,	316L	Flange EN1092-1 (DIN2527 C)	43
		PTFE clad			
	B0K	DN25 PN25/40,	PTFE >316L	Flange EN1092-1 (DIN2527)	–
	B1K	DN32 PN25/40,	PTFE >316L	Flange EN1092-1 (DIN2527)	–
	B2K	DN40 PN25/40,	PTFE >316L	Flange EN1092-1 (DIN2527)	–
	B3K	DN50 PN25/40,	PTFE >316L	Flange EN1092-1 (DIN2527)	–
	BSK	DN80 PN10/16,	PTFE >316L	Flange EN1092-1 (DIN2527)	–
	BTK	DN100 PN10/16,	PTFE >316L	Flange EN1092-1 (DIN2527)	–
	ANSI flanges				
	ACJ	1" 150 lbs RF,	316/316L	Flange ANSI B16.5	22
	ANJ	1" 300 lbs RF,	316/316L	Flange ANSI B16.5	22
	AEJ	1½" 150 lbs RF,	316/316L	Flange ANSI B16.5	22
	AQJ	1½" 300 lbs RF,	316/316L	Flange ANSI B16.5	22
	AFJ	2" 150 lbs RF,	316/316L	Flange ANSI B16.5	22/43***
	ARJ	2" 300 lbs RF,	316/316L	Flange ANSI B16.5	22/43***
	AGJ	3" 150 lbs RF,	316/316L	Flange ANSI B16.5	43
	ASJ	3" 300 lbs RF,	316/316L	Flange ANSI B16.5	43
	AHJ	4" 150 lbs RF,	316/316L	Flange ANSI B16.5	43
	ATJ	4" 300 lbs RF,	316/316L	Flange ANSI B16.5	43
	AJJ	6" 150 lbs RF,	316/316L	Flange ANSI B16.5	43
	AUJ	6" 300 lbs RF,	316/316L	Flange ANSI B16.5	43
		PTFE clad			
	ACK	1" 150 lbs,	PTFE >316/316L	Flange ANSI B16.5	–
	ANK	1" 300 lbs,	PTFE >316/316L	Flange ANSI B16.5	–
	AEK	1½" 150 lbs,	PTFE >316/316L	Flange ANSI B16.5	–
	AQK	1½" 300 lbs,	PTFE >316/316L	Flange ANSI B16.5	–
	AFK	2" 150 lbs,	PTFE >316/316L	Flange ANSI B16.5	–
	ARK	2" 300 lbs,	PTFE >316/316L	Flange ANSI B16.5	–
	AGK	3" 150 lbs,	PTFE >316/316L	Flange ANSI B16.5	–
	AHK	4" 150 lbs,	PTFE >316/316L	Flange ANSI B16.5	–
	JIS flanges				
	KCJ	10K 25 RF,	316L	Flange JIS B2220	22
	KEJ	10K 40 RF,	316L	Flange JIS B2220	22
	KFJ	10K 50 RF,	316L	Flange JIS B2220	22/43***
	KGJ	10K 80 RF,	316L	Flange JIS B2220	22/43***
	KHJ	10K 100 RF,	316L	Flange JIS B2220	22/43***
	KRJ	20K 50 RF,	316L	Flange JIS B2220	43
		PTFE clad			
	KCK	10K 25 RF,	PTFE >316L	Flange JIS B2220	–
	KEK	10K 40 RF,	PTFE >316L	Flange JIS B2220	–
	KFK	10K 50 RF,	PTFE >316L	Flange JIS B2220	–
	KGK	10K 80 RF,	PTFE >316L	Flange JIS B2220	–
	KHK	10K 100 RF,	PTFE >316L	Flange JIS B2220	–
	YY9	Special version, to be specified			

60	Electronics; Output:		
	A	FEI50H; 4 to 20 mA HART + display	
	B	FEI50H; 4 to 20 mA HART	
	C	FEI57C; PFM	
	V	None; Prepared for FEI5x + display,	cover high, transparent
	W	None; Prepared for FEI5x,	cover flat
	Y	Special version, to be specified	

70	Housing:		
	1	F15 316L	IP66, NEMA4X
	2	F16 polyester	IP66, NEMA4X
	3	F17 aluminum	IP66, NEMA4X
	4	F13 aluminum + gas-tight probe seal	IP66, NEMA4X
	5	T13 Alu + gas-tight probe seal + separate connection compartment	IP66, NEMA4X
	6	F27 316L + gas-tight probe seal	IP68, NEMA6P
	9	Special version, to be specified	

80	Cable Entry:	
	A	Gland M20 (Ex d > thread M20)
	B	Thread G ½
	C	Thread NPT ½
	D	Thread NPT ¾
	E	Plug M12
	Y	Special version, to be specified

90	Type of Probe:		
	L4: 300 to 6000 mm/12 to 240 inch		
	1	Compact	
	2	2000 mm L4 cable	> separate housing
	3	....mm L4 cable	> separate housing
	4	80 inch L4 cable	> separate housing
	5	....inch L4 cable	> separate housing
	9	Special version, to be specified	

100	Additional Option:	
	A	Basic version
	B	PWIS free, PWIS = paint-wetting impairment substances
	C	Metal probe rod surface refining**
	D	EN10204-3.1, (316L wetted parts/pressurized), inspection certificate
	E	EN10204-3.1, NACE MR0175 (316L wetted parts/pressurized), inspection certificate
	F	SIL Declaration of Conformity
	S	GL marine certificate
	Y	Special version, to be specified

FMI51	Product designation

*** With this option, the complete device is cleaned for applications free from paint-wetting impairment substances.**
** With this option, the surface of the probe rod (316L) is passivated and acts as additional corrosion protection
*** Depends on the probe rod ∅ (10 mm -> 22 mm; 16 mm -> 43 mm; 22 mm rod not with inactive length)

Liquicap M FMI51 (device identification)

10	Approval:			
	A	Non-hazardous area		
	B	Non-hazardous area,		WHG
	E	ATEX II 1/2 GD	Ex ia IIB T6	
	F	ATEX II 1/2 GD	Ex ia IIB T6,	WHG
	G	ATEX II 1/2 G	Ex d (ia) IIB T6,	WHG
	H	ATEX II 1/2 GD	Ex ia IIC T6,	
		XA, note safety instruction (XA) (electrostatic charging)!		
	J	ATEX II 1/2 GD	Ex ia IIC T6,	
		XA, note safety instruction (XA) (electrostatic charging)!		
	K	ATEX II 1/2 G	Ex ia IIC T6,	WHG
		XA, note safety instruction (XA) (electrostatic charging)!		
	L	ATEX II 1/2 G	Ex de (ia) IIC T6,	WHG
		XA, note safety instruction (XA) (electrostatic charging)!		
	M	ATEX II 3 GD	Ex nA II T6,	WHG
		XA, note safety instruction (XA) (electrostatic charging)!		
	N	CSA General Purpose, CSA C US		
	P	CSA/FM IS Cl. I, II, III	Div. 1+2 Gr. A-G	
	R	CSA/FM XP Cl. I, II, III	Div. 1+2 Gr. A-G	
	S	TIIS Ex ia IIC T3		
	T	TIIS Ex d IIC T3		
	1	NEPSI Ex ia IIC T6		
	2	NEPSI Ex d(ia) IIC T6		
	4	NEPSI Ex nA IIC T6		
	5	IECEx Ga/Gb Ex ia IIC T6; Ex iaD 20/ Ex tD A21		
	6	IECEx Ga/Gb Ex ia IIC T6		
	Y	Special version, to be specified		

20		Inactive Length L3:	
		Price per 100 mm/1 inch	
		L3: 100 to 2000 mm/4 to 80 inch for 316L	
		L3: 150 to 1000 mm/6 to 40 inch for PFA fully insulated	
		Protection against condensate + bypassing container nozzles	
	1	Not selected	
	2	... mm L3,	316L
	3	... mm L3,	316L + fully insulated PFA
	5	... inch L3,	316L
	6	... inch L3,	316L + fully insulated PFA
	9	Special version, to be specified	

30			Active Probe Length L1; Insulation:	
			Price per 1000 mm/10 inch	
			L1: 420 to 10000 mm/17 to 400 inch; fully insulated	
		A	... mm L1,	316; FEP
		B	... mm L1,	316; PFA
		C	... inch L1,	316; FEP
		D	... inch L1,	316; PFA
		Y	Special version, to be specified	

50			Process Connection:			∅ inactive length (mm)
			Threaded connection			
		GDJ	G ¾,	316L, 25 bar	Thread ISO228	22
		GEJ	G 1,	316L, 25 bar	Thread ISO228	22
		GGJ	G 1½,	316L, 100 bar	Thread ISO228	43
		RDJ	NPT ¾,	316L, 25 bar	Thread ANSI	22
		REJ	NPT 1,	316L, 25 bar	Thread ANSI	22
		RGJ	NPT 1½,	316L, 100 bar	Thread ANSI	43
			Hygiene connection			
		GWJ	G 1	316L, 25 bar, EHEDG	Thread ISO228	–
			Accessories installation, weld-in adapter			
		MRJ	DN50 PN40,	316L	DIN11851	43
		UPJ	Universal adapter 44 mm	316L, 16 bar, EHEDG		–
			Tri-Clamp connection			
		TCJ	DN25 (1"), EHEDG	316L,	Tri-Clamp ISO2852	22
		TJJ	DN38 (1½"), EHEDG	316L,	Tri-Clamp ISO2852	22
		TJK	DN38 (1½"), EHEDG	PTFE >316L, 3A	Tri-Clamp ISO2852	22
		TDJ	DN40-51 (2"),	316L,	Tri-Clamp ISO2852	43

50	Process Connection:			∅ inactive length (mm)
TDK	DN40-51 (2"), EHEDG	PTFE >316L, 3A,	Tri-Clamp ISO2852	–
EN flanges				
B0J	DN25 PN25/40 A,	316L	Flange EN1092-1 (DIN2527 B)	22
B1J	DN32 PN25/40 A,	316L	Flange EN1092-1 (DIN2527 B)	22
B2J	DN40 PN25/40 A,	316L	Flange EN1092-1 (DIN2527 B)	22
B3J	DN50 PN25/40 A,	316L	Flange EN1092-1 (DIN2527 B)	43
CRJ	DN50 PN25/40 B1,	316L	Flange EN1092-1 (DIN2527 C)	43
DRJ	DN50 PN40 C,	316L	Flange EN1092-1 (DIN2512 F)	43
ERJ	DN50 PN40 D,	316L	Flange EN1092-1 (DIN2512 N)	43
BSJ	DN80 PN10/16 A,	316L	Flange EN1092-1 (DIN2527 B)	43
CGJ	DN80 PN10/16 B1,	316L	Flange EN1092-1 (DIN2527 C)	43
DGJ	DN80 PN16 C,	316L	Flange EN1092-1 (DIN2512 F)	43
EGJ	DN80 PN16 D,	316L	Flange EN1092-1 (DIN2512 N)	43
BTJ	DN100 PN10/16 A,	316L	Flange EN1092-1 (DIN2527 B)	43
CHJ	DN100 PN10/16 B1,	316L	Flange EN1092-1 (DIN2527 C)	43
	PTFE clad			
B0K	DN25 PN25/40,	PTFE >316L	Flange EN1092-1 (DIN2527)	–
B1K	DN32 PN25/40,	PTFE >316L	Flange EN1092-1 (DIN2527)	–
B2K	DN40 PN25/40,	PTFE >316L	Flange EN1092-1 (DIN2527)	–
B3K	DN50 PN25/40,	PTFE >316L	Flange EN1092-1 (DIN2527)	–
BSK	DN80 PN10/16,	PTFE >316L	Flange EN1092-1 (DIN2527)	–
BTK	DN100 PN10/16,	PTFE >316L	Flange EN1092-1 (DIN2527)	–
ANSI flanges				
ACJ	1" 150 lbs RF,	316/316L	Flange ANSI B16.5	22
ANJ	1" 300 lbs RF,	316/316L	Flange ANSI B16.5	22
AEJ	1½" 150 lbs RF,	316/316L	Flange ANSI B16.5	22
AQJ	1½" 300 lbs RF,	316/316L	Flange ANSI B16.5	43
AFJ	2" 150 lbs RF,	316/316L	Flange ANSI B16.5	43
ARJ	2" 300 lbs RF,	316/316L	Flange ANSI B16.5	43
AGJ	3" 150 lbs RF,	316/316L	Flange ANSI B16.5	43
ASJ	3" 300 lbs RF,	316/316L	Flange ANSI B16.5	43
AHJ	4" 150 lbs RF,	316/316L	Flange ANSI B16.5	43
ATJ	4" 300 lbs RF,	316/316L	Flange ANSI B16.5	43
AJJ	6" 150 lbs RF,	316/316L	Flange ANSI B16.5	43
AUJ	6" 300 lbs RF,	316/316L	Flange ANSI B16.5	43
	PTFE clad			
ACK	1" 150 lbs,	PTFE >316/316L	Flange ANSI B16.5	–
ANK	1" 300 lbs,	PTFE >316/316L	Flange ANSI B16.5	–
AEK	1½" 150 lbs,	PTFE >316/316L	Flange ANSI B16.5	–
AQK	1½" 300 lbs,	PTFE >316/316L	Flange ANSI B16.5	–
AFK	2" 150 lbs,	PTFE >316/316L	Flange ANSI B16.5	–
ARK	2" 300 lbs,	PTFE >316/316L	Flange ANSI B16.5	–
AGK	3" 150 lbs,	PTFE >316/316L	Flange ANSI B16.5	–
AHK	4" 150 lbs,	PTFE >316/316L	Flange ANSI B16.5	–
JIS flanges				
KCJ	10K 25 RF,	316L	Flange JIS B2220	22
KEJ	10K 40 RF,	316L	Flange JIS B2220	22
KFJ	10K 50 RF,	316L	Flange JIS B2220	43
KGJ	10K 80 RF,	316L	Flange JIS B2220	43
KHJ	10K 100 RF,	316L	Flange JIS B2220	43
KRJ	20K 50 RF,	316L	Flange JIS B2220	43
	PTFE clad			

50	Process Connection:				∅ inactive length (mm)
	KCK	10K 25 RF,	PTFE >316L	Flange JIS B2220	–
	KEK	10K 40 RF,	PTFE >316L	Flange JIS B2220	–
	KFK	10K 50 RF,	PTFE >316L	Flange JIS B2220	–
	KGK	10K 80 RF,	PTFE >316L	Flange JIS B2220	–
	KHK	10K 100 RF,	PTFE >316L	Flange JIS B2220	–
	YY9	Special version, to be specified			

60	Electronics; Output:		
	A	FEI50H; 4 to 20 mA HART + display	
	B	FEI50H; 4 to 20 mA HART	
	C	FEI57C; PFM	
	V	None; Prepared for FEI5x + display,	cover high, transparent
	W	None; Prepared for FEI5x,	cover flat
	Y	Special version, to be specified	

70	Housing:		
	1	F15 316L	IP66, NEMA4X
	2	F16 polyester	IP66, NEMA4X
	3	F17 aluminum	IP66, NEMA4X
	4	F13 aluminum + gas-tight probe seal	IP66, NEMA4X
	5	T13 Alu + gas-tight probe seal + separate connection compartment	IP66, NEMA4X
	6	F27 316L + gas-tight probe seal	IP68, NEMA6P
	9	Special version, to be specified	

80	Cable Entry:	
	A	Gland M20 (Ex d > thread M20)
	B	Thread G ½
	C	Thread NPT ½
	D	Thread NPT ¾
	E	Plug M12
	Y	Special version, to be specified

90	Type of Probe:		
	L4: 100 to 6000 mm/12 to 240 inch		
	1	Compact	
	2	2000 mm L4 cable	> separate housing
	3	....mm L4 cable	> separate housing
	4	80 inch L4 cable	> separate housing
	5	....inch L4 cable	> separate housing
	9	Special version, to be specified	

100	Additional Option:	
	A	Basic version
	D	EN10204-3.1 (316L wetted parts/pressurized), inspection certificate
	E	EN10204-3.1, NACE MR0175 (316L wetted parts/pressurized), inspection certificate
	F	SIL Declaration of Conformity
	S	GL marine certificate
	Y	Special version, to be specified

FMI52	Product designation

2.2 Scope of delivery

Caution!
Please pay attention to the instructions on unpacking, transporting and storing the measuring devices outlined in the "Incoming acceptance, transport, storage" section on → 13.

The scope of delivery comprises:
- The installed device
- Optional accessories (→ 35)

Documentation supplied:
- Operating Instructions
- Approval documentation; if not listed in the Operating Instructions.

2.3 Certificates and approvals

CE mark, Declaration of Conformity
The device has been constructed and tested to state-of-the-art operational safety standards and left the factory in perfect condition as regards technical safety. The device complies with the applicable standards and regulations that are listed in the EC Declaration of Conformity and thus meets the legal requirements of the EC Directives. Endress+Hauser confirms that the device has been tested successfully by affixing the CE mark.

2.4 Trademarks

Tri-Clamp®
Registered trademark of Ladish & Co., Inc., Kenosha, USA

3 Installation

3.1 Quick installation guide

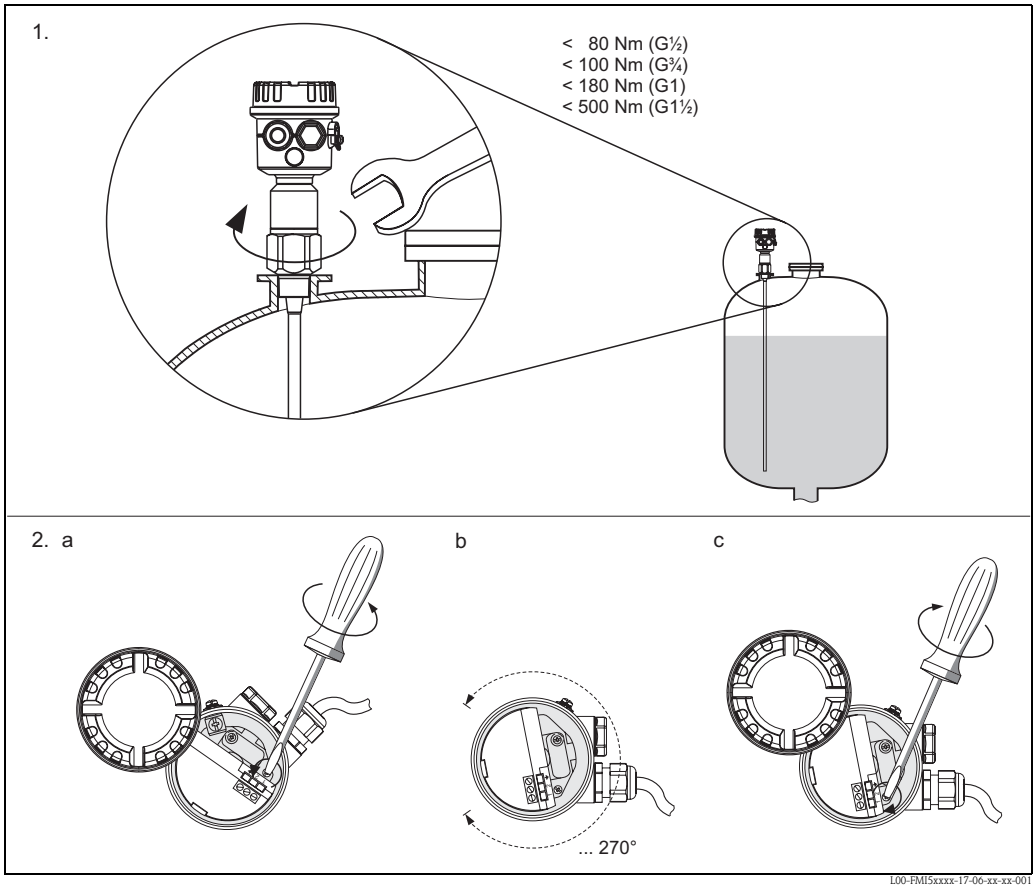

1.) Screw in the device
2. a) Loosen clamping screw until the housing rotates easily.
2. b) Align the housing.
2. c) Tighten clamping screw (< 1 Nm) until the housing can no longer be rotated.

3.2 Incoming acceptance, transport, storage

3.2.1 Incoming acceptance

Check whether the packaging or content is damaged.
Check that the goods delivered are complete and compare the scope of delivery against the information on your order.

3.2.2 Storage

For storage and transportation, pack the device in such a way as to protect it reliably against impact. The original packaging offers the best protection for this.
The permitted storage temperature is –50°C to +85°C.

3.3 Planning instructions

3.3.1 Installation

The Liquicap M FMI51 (rod probe) can be installed from above and from below.
The Liquicap M FMI52 (rope probe) can be installed vertically from above.

Note!
- The probe may not come into contact with the container wall!
- Recommended distance from the container floor: ≥10 mm.
- Do not install probes in the area of the filling curtain!
- If using the probe in agitator tanks, make sure the probe is at a sufficient distance from the agitator.
- Rod probes with a ground tube must be used in the event of severe lateral load.

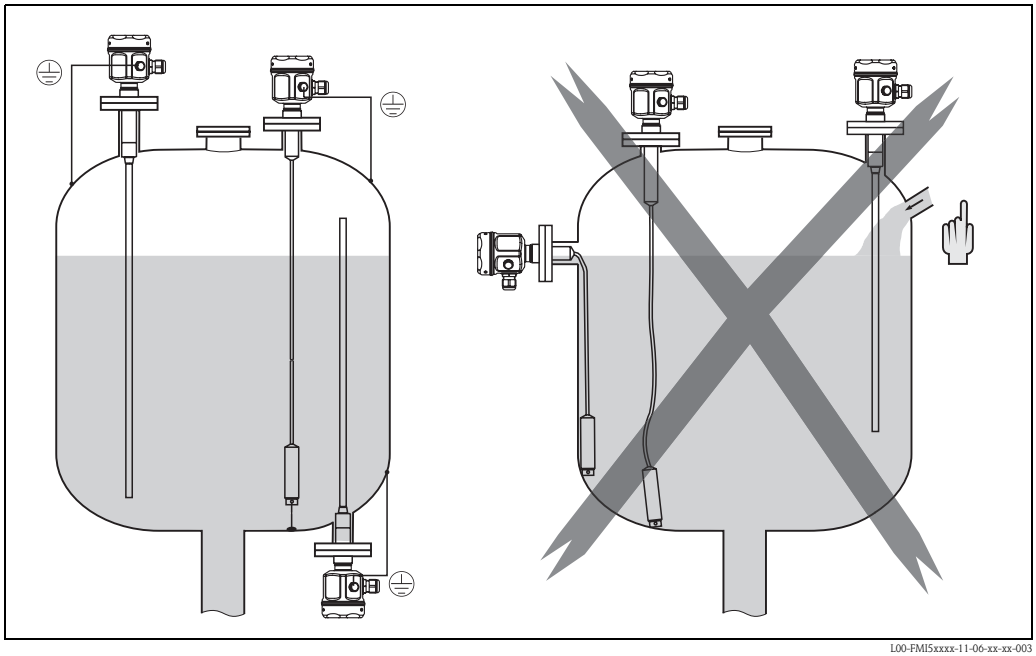

L00-FMI5xxxx-11-06-xx-xx-003

3.3.2 Support with marine approval (GL)

Conductive or nonconductive support can be provided for fully insulated rod probes.
Partially insulated rod probes may only be supported with insulation at the uninsulated end of the probe.

Note!
Rod probes with a diameter of 10 mm and 16 mm have to be supported with a length ≥ 1 m (see drawing).

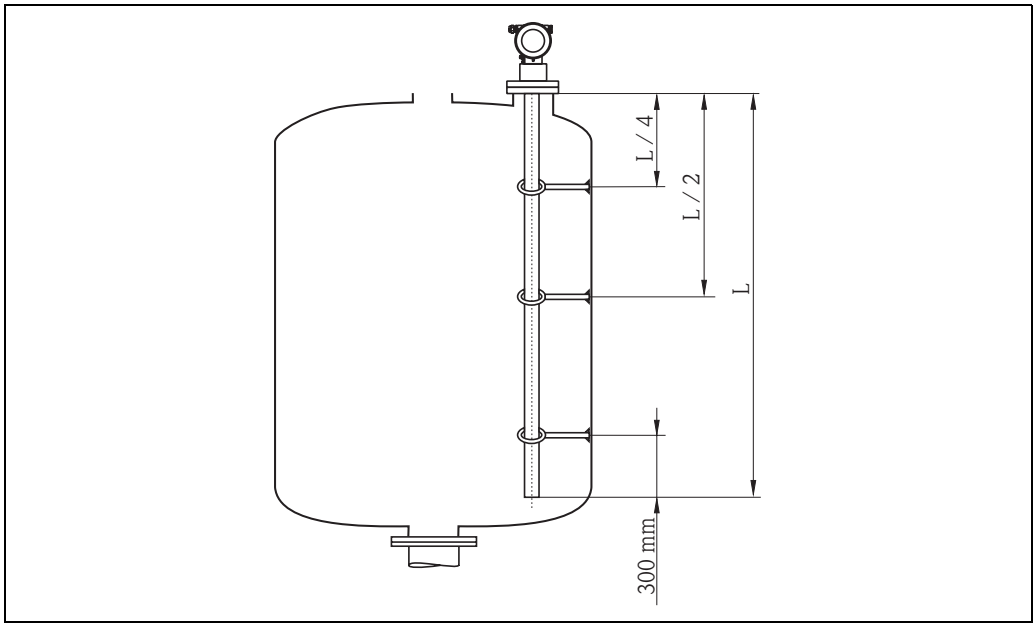

L00-FMI5xxxx-06-05-xx-xx-077

Example for calculating distances:
Probe length L = 2000 mm.
L/4 = 500 mm
L/2 = 1000 mm
Measured from the end of the probe rod = 300 mm.

3.4 Measuring condition

- Measuring range L1 possible from the tip of the probe to the process connection.
- Particularly suited for small containers.
- Use a ground tube for nonconductive media.

Note!
When installing in a nozzle, use inactive length (L3).

The 0 %, 100 % calibration can be inverted.

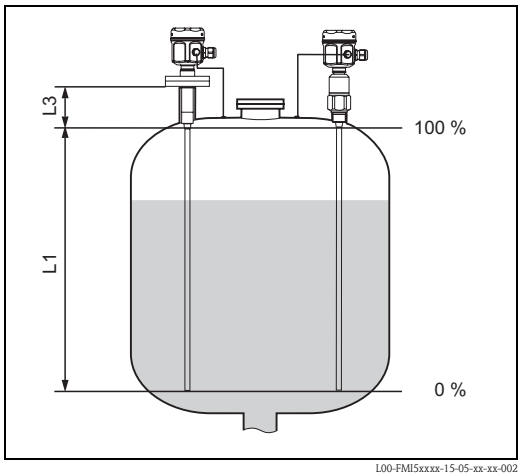

L00-FMI5xxxx-15-05-xx-xx-002

3.5 Minimum probe length for nonconductive media (<1µs/cm)

$l_{min} = \Delta C_{min} / (C_s * [\varepsilon r - 1])$

l_{min}	=	Minimum probe length
ΔC_{min}	=	5 pF
C_s	=	Probe capacitance in air (see also → 38, "Additional capacitance")
εr	=	Dielectric constant e.g. oil = 2.0

3.6 Installation examples

3.6.1 Rod probes

Conductive tanks (metal tanks)

If the process connection of the probe is insulated from the metal tank (e.g. using seal material), the ground connection on the probe housing must be connected to the tank using a short line.

Note!
- A fully insulated rod probe may be neither shortened nor extended.
- If the insulation of the probe rod is damaged, this results in an incorrect measurement result.
- These application examples show vertical installation for continuous level measurement.

FMI51: rod probe

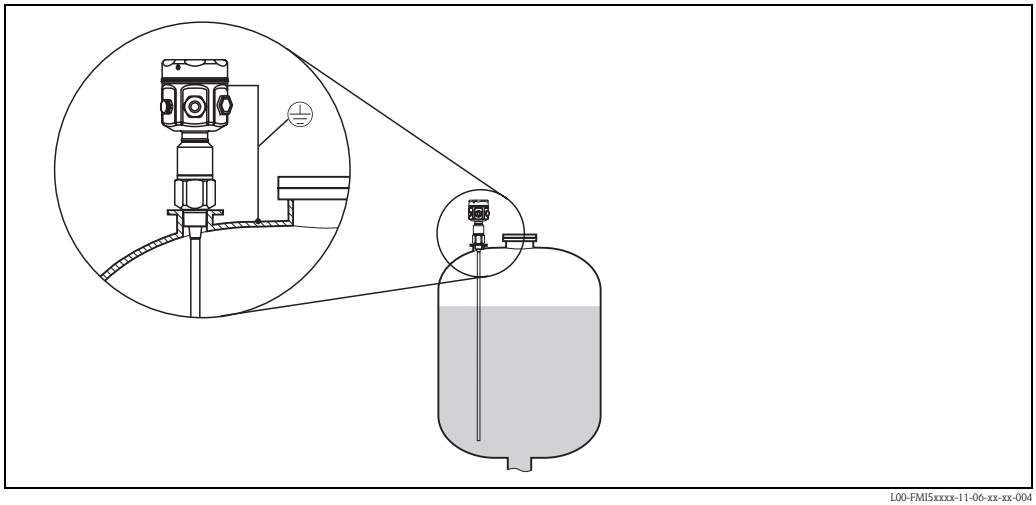

L00-FMI5xxxx-11-06-xx-xx-004

FMI51: rod probe with ground tube

Nonconductive tanks (plastic tanks)

When installing in a plastic tank, a probe with a ground tube must be used.

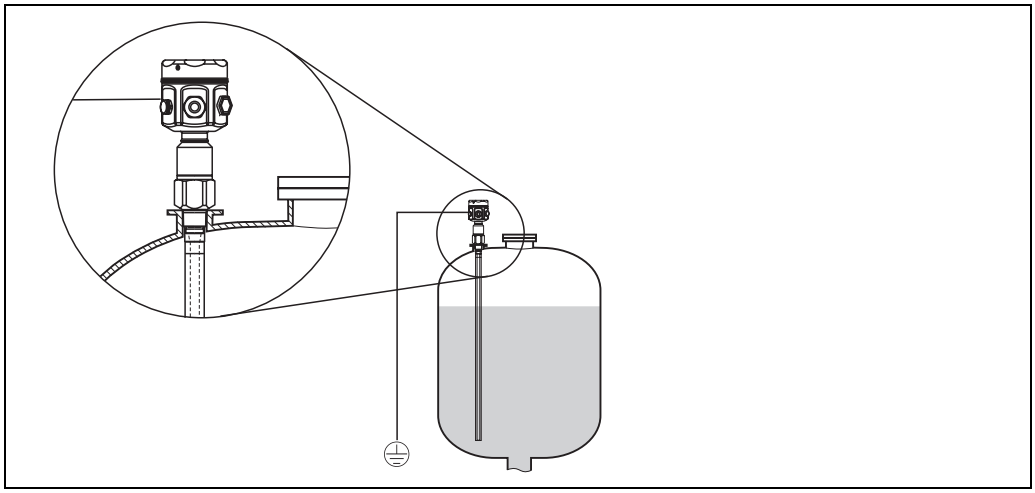

L00-FMI5xxxx-11-06-xx-xx-005

FMI51: rod probe with inactive length (e.g. for insulated tanks)

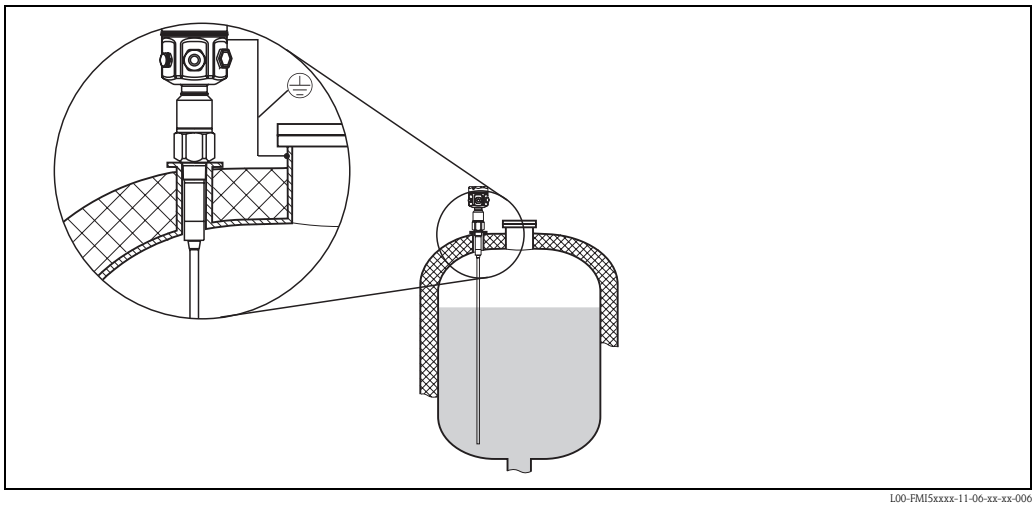

L00-FMI5xxxx-11-06-xx-xx-006

FMI51: rod probe with ground tube and inactive length (for mounting nozzles)

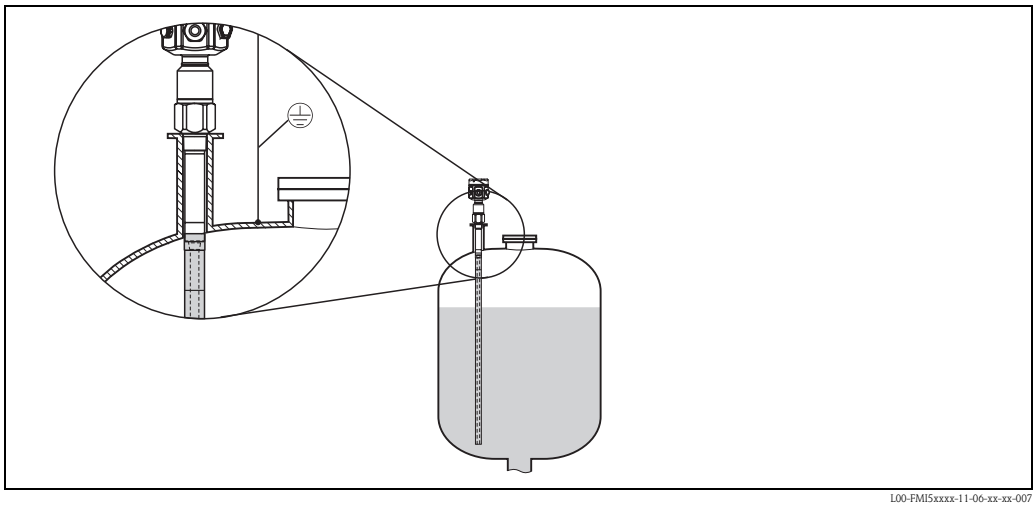

L00-FMI5xxxx-11-06-xx-xx-007

FMI51: fully insulated probe with clad flange for aggressive media

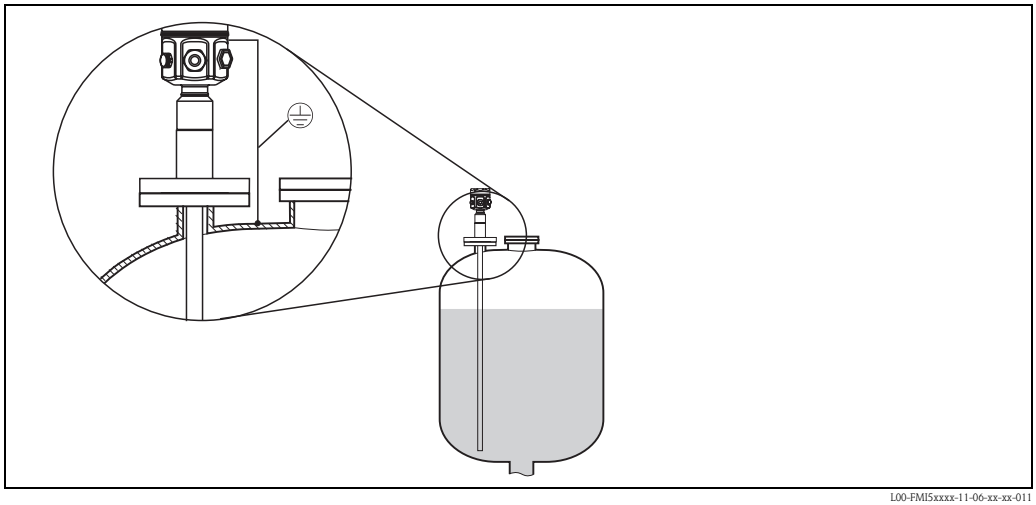

L00-FMI5xxxx-11-06-xx-xx-011

3.6.2 Rope probes

Note!
These application examples show the installation of rope probes for continuous level measurement.

FMI52: rope probe

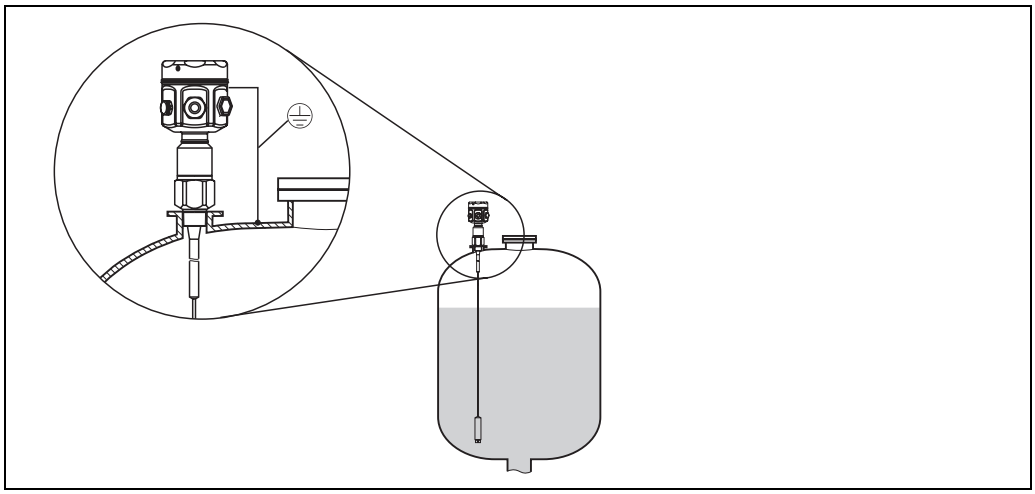

L00-FMI5xxxx-11-06-xx-xx-008

FMI52: rope probe with inactive length (e.g. for insulated tanks)

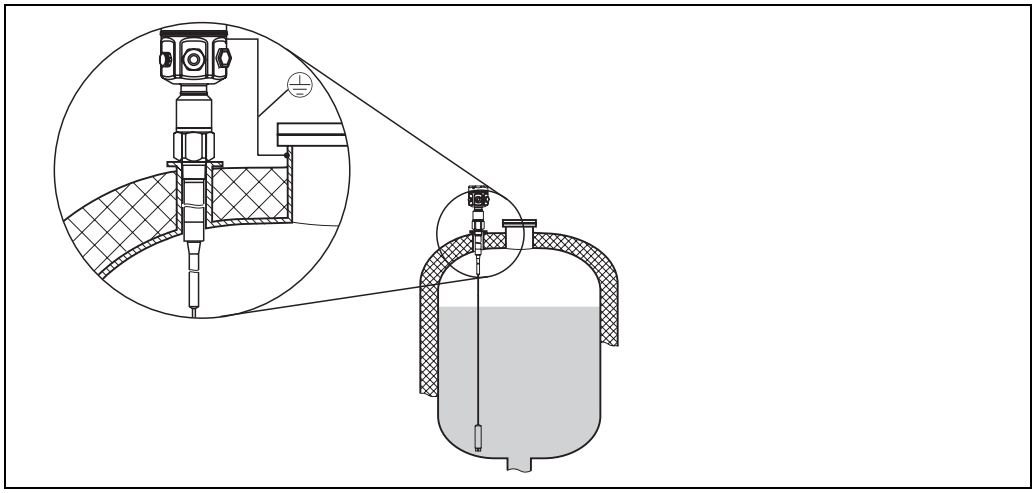

L00-FMI5xxxx-11-06-xx-xx-009

FMI52: rope probe with fully insulated inactive length (for mounting nozzles)

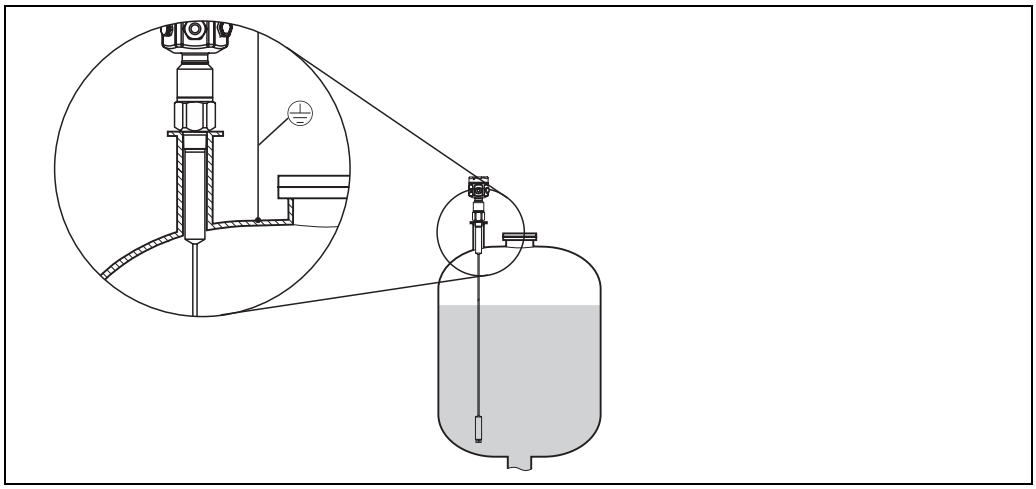

L00-FMI5xxxx-11-06-xx-xx-010

3.6.3 Shortening the rope

Note!
See Operating Instructions, rope shortening kit KA061F/00.

3.6.4 Tensioning weight with tension

The end of the probe needs to be secured if the probe would otherwise touch the silo wall or another part in the tank. This is what the internal thread in the probe weight is intended for.
The bracing can be conductive or insulating to the tank wall.

To avoid too high a tensile load the rope should be loose or guyed with a spring. The maximum tensile load may not exceed 200 Nm.

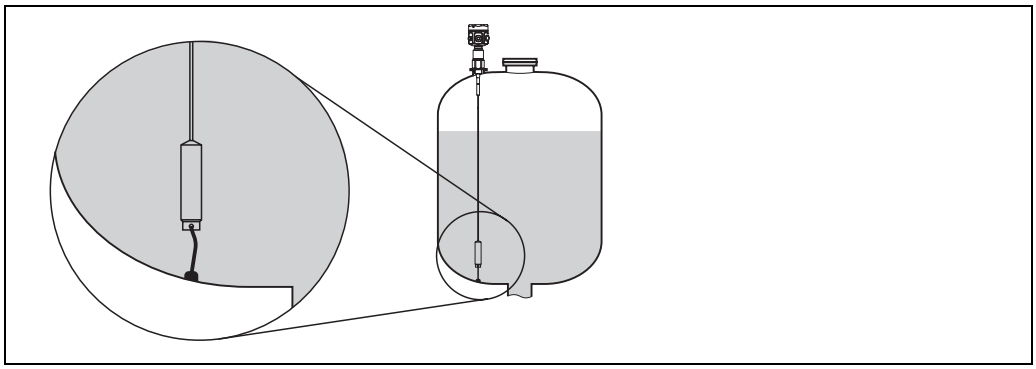

L00-FMI5xxxx-11-06-xx-xx-012

3.7 With separate housing

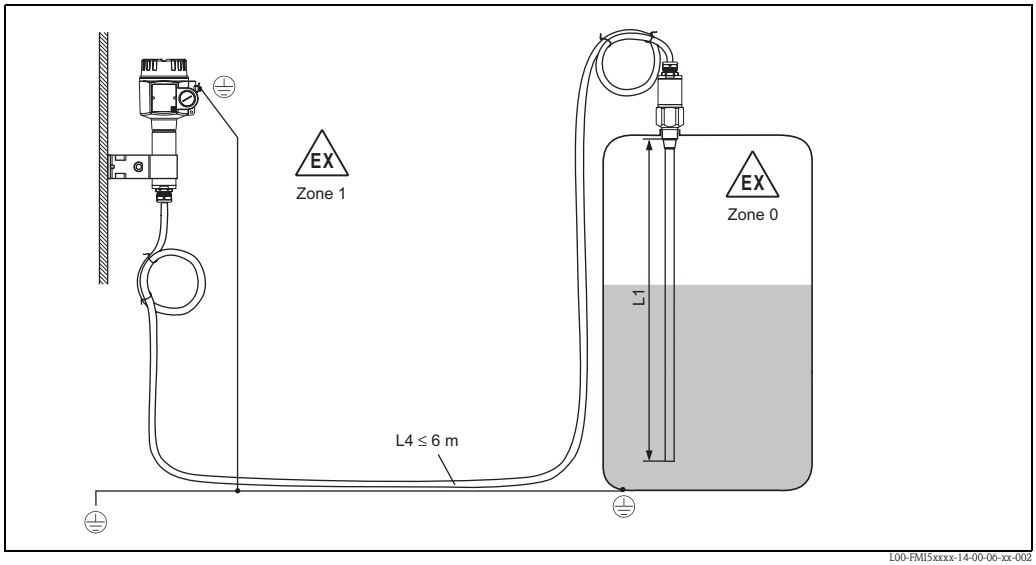

Rod length L1 max. 4 m
Rope length L1 max. 9.7 m (the maximum total length of L1 + L4 should not exceed 10 m).

Note!
- The maximum cable length between probe and separate housing is 6 m (L4). The required cable length must be indicated in the ordering process of a Liquicap M with separate housing.
- The total length L = L1 + L4 should not exceed 10 m.
- If the cable connection has to be shortened or led through a wall, it must be separated from the process connection.
- For information on ordering, please refer also to the "Ordering information" => "Probe design" on → 🖹 5.

3.7.1 Extension heights: separate housing

Housing side: wall mounting | Housing side: pipe mounting | Sensor side

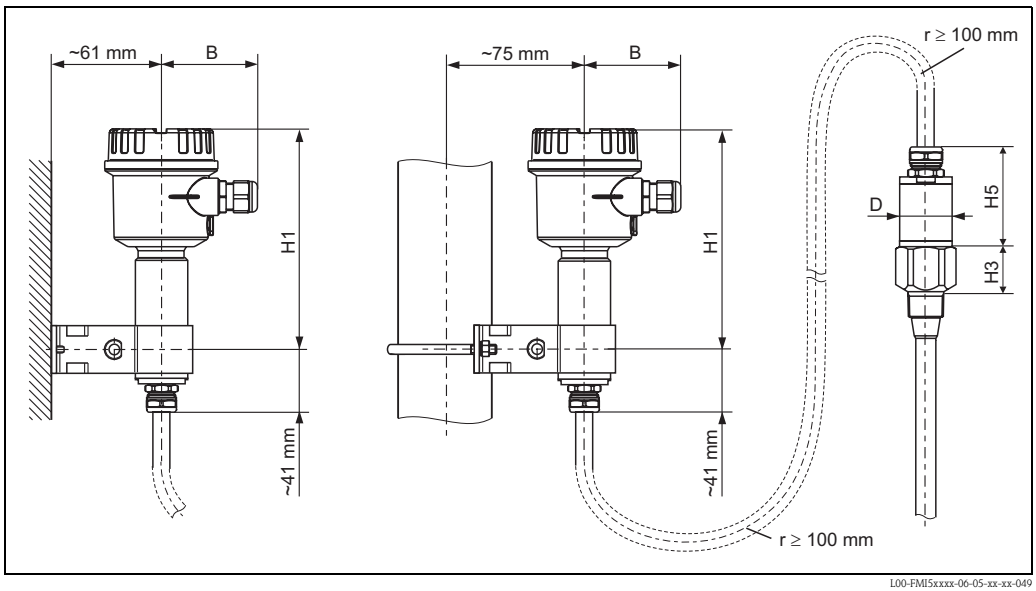

Note!
- The cable has a bending radius of r ≥ 100 mm.
- Connecting cable: ø10.5 mm
- Outer jacket: silicone, notch resistance

	Polyester housing (F16)	Stainless steel housing (F15)	Aluminum housing (F17)
B (mm)	76	64	65
H1 (mm)	172	166	177

		H5 (mm)	**D** (mm)
Probes Ø10 mm rod		66	38
Probes Ø16 mm rod or rope (without fully insulated inactive length)	G¾", G1", NPT¾", NPT1", Clamp 1", Clamp 1½", Universal Ø44, flange <DN 50, ANSI 2", 10K50	66	38
	G1½", NPT1½", Clamp 2", DIN 11851, flanges ≥DN 50, ANSI 2", 10K50	89	50
Probes Ø 22 mm rod or rope (with fully insulated inactive length)		89	38

3.7.2 Wall bracket

Note!
- The wall bracket forms part of the scope of delivery.
- The wall bracket first has to be screwed to the separate housing before you can use it as a drilling template. The distance between the holes is reduced by screwing it to the separate housing.

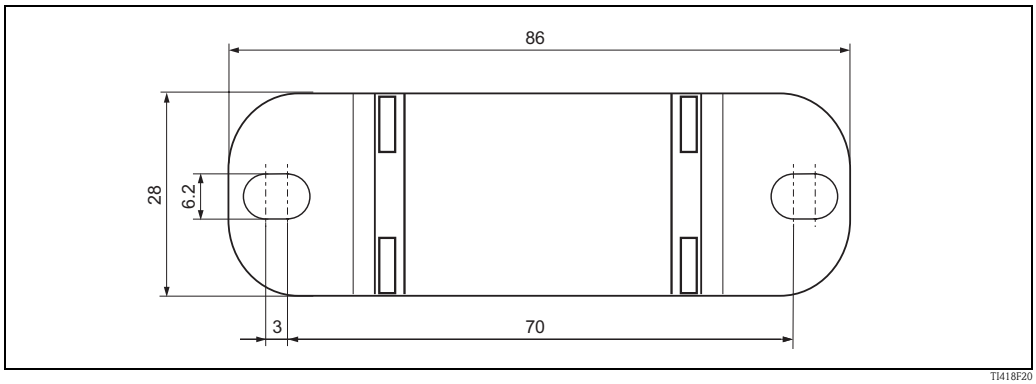

TI418F20

3.7.3 Wall mounting

- Push the wall bracket onto the tube and screw it together.
- Mark the distance between the holes on the wall and drill the holes.
- Screw the separate housing on the wall.

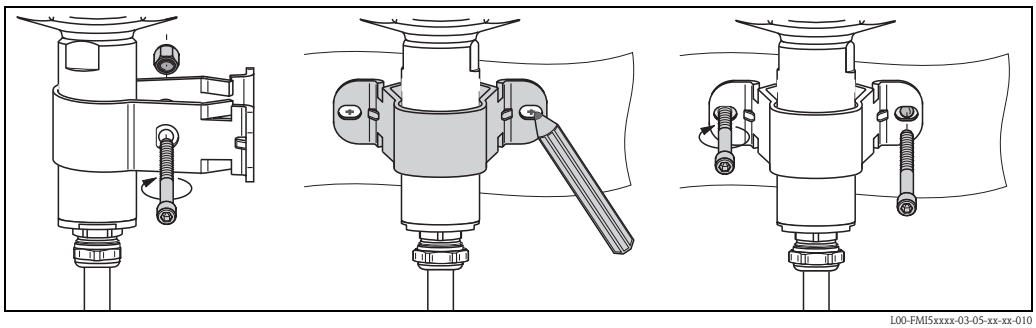
L00-FMI5xxxx-03-05-xx-xx-010

3.7.4 Pipe mounting

- Push the wall bracket onto the tube and screw it together.

■ Screw the separate housing on a pipe of max. 2".

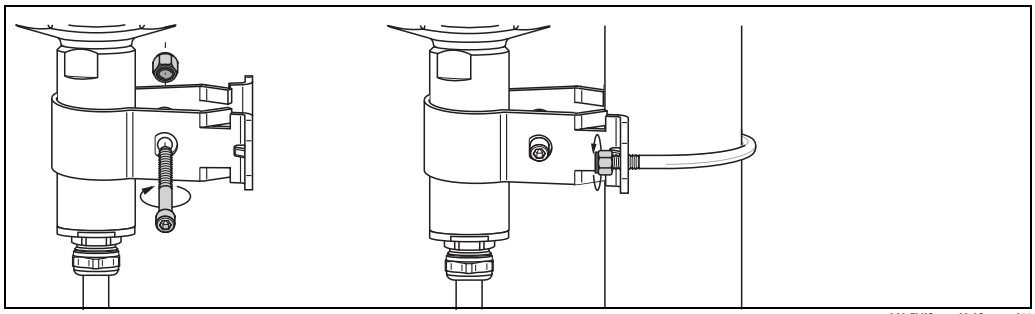

L00-FMI5xxxx-03-05-xx-xx-011

3.7.5 Shortening the connecting cable

Recalibration must be performed before commissioning → 📄 33

Note!
The maximum connection length between the probe and the separate housing is 6 m. When ordering a device with a separate housing, the desired length must be specified.

If the cable connection has to be shortened or led through a wall, it must be separated from the process connection. Please proceed as follows:

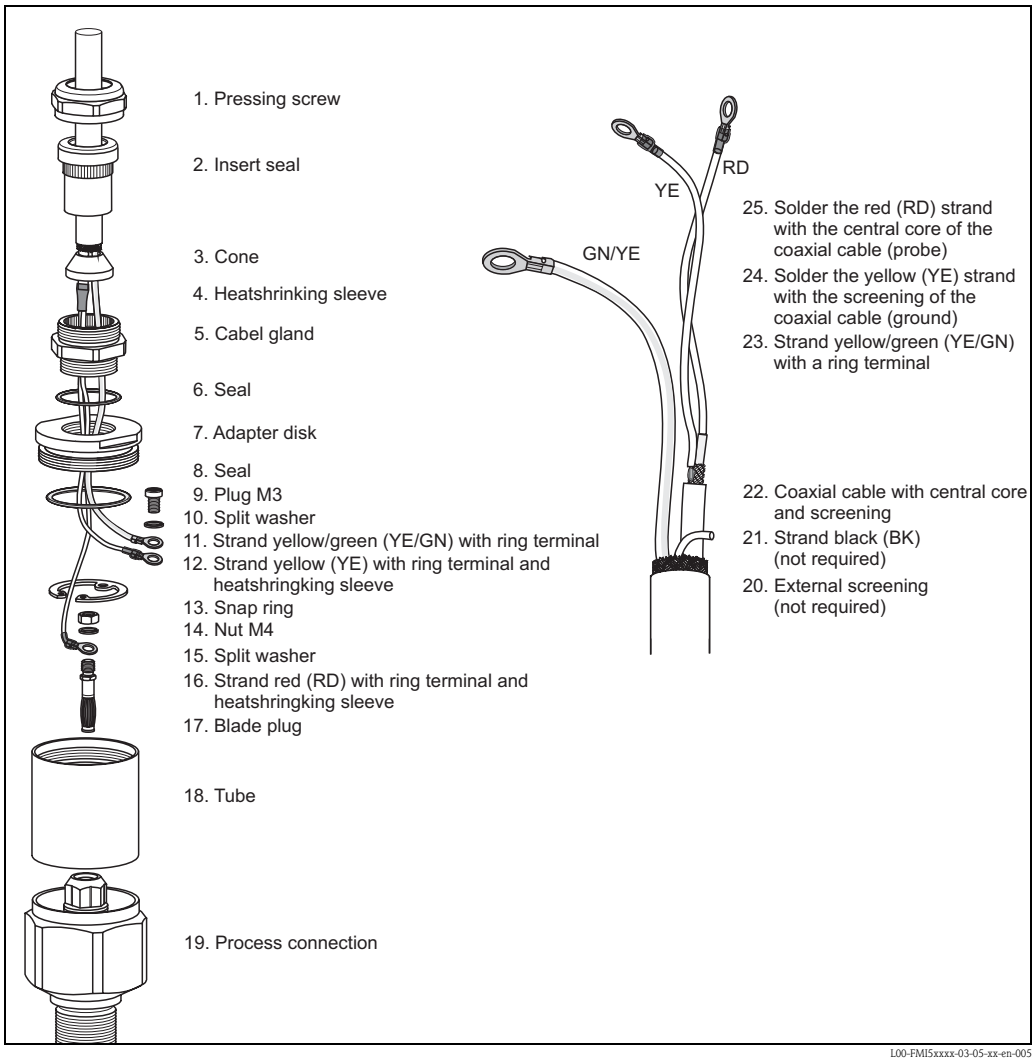

L00-FMI5xxxx-03-05-xx-en-005

- Loosen the pressing screw (1) with an open-end wrench (AF22). If necessary, hold the process connection. Please make sure that neither the connecting cable nor the probe is turning with the pressing screw.
- Pull the insert seal (2) out of the cable gland (5).
- Using an open-end wrench (AF22), disconnect the cable gland (5) from the adapter disk. If necessary, hold it against the adapter disk (7) using an open-end wrench AF34.
- Loosen the adapter disk (7) from the tube (18).
- Remove the snap ring (13) with a pair of snap ring pliers.
- Clutch the nut (M4) of the blade plug with a pair of pliers and pull this out.

Note!
- If you are shortening the connecting cable, we recommend to reuse all strands with ring terminals.
- If the strands are not to be reused, the crimp connections of the new ring terminals fitted must be isolated with a heat shrinking sleeve (risk of short-circuiting).
- All soldered joints must be insulated. Use heat-shrink tubes to do so.

3.8 Installation instructions

Caution!
- Do not damage the probe insulation when installing!
- When screwing in the probe, do not turn at the housing as this could damage the housing mounting.

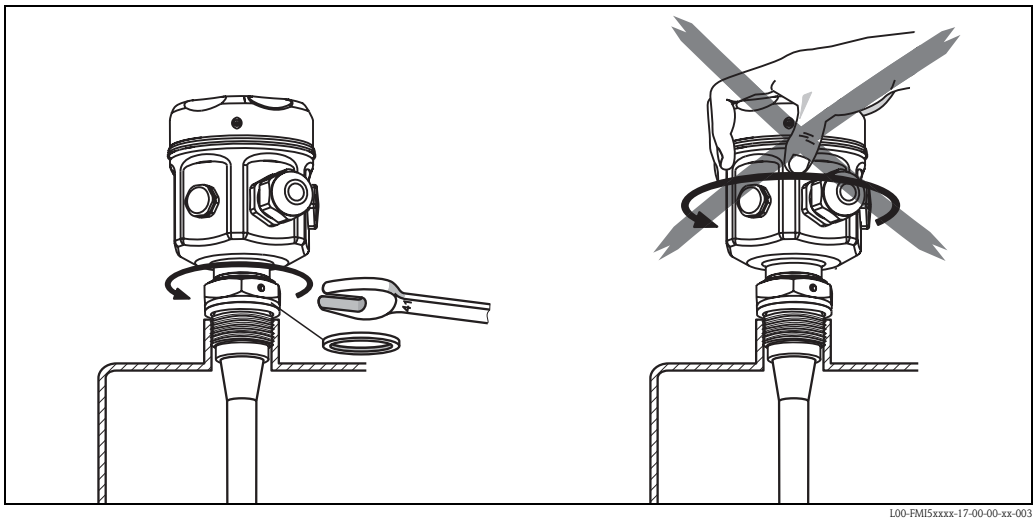

L00-FMI5xxxx-17-00-00-xx-003

Probe with thread

G ½, G ¾, G 1 or G 1½ (cylindrical):
To be used with the elastomer fiber seal supplied (pay attention to temperature resistance) or another chemically resistant seal.

Note!
The following applies for probes with a parallel thread and supplied seal:

Thread	For pressures up to 25 bar	For pressures up to 100 bar	Maximum torque
G ½	25 Nm	-	80 Nm
G ¾	30 Nm	-	100 Nm
G 1	50 Nm	-	180 Nm
G 1½	-	300 Nm	500 Nm

½ NPT , ¾ NPT, 1 NPT and 1½ NPT (conical):
Wrap the thread by a suitable sealing material (Use conductive sealing material only).

Probe with Tri-Clamp, sanitary connection or flange

- The process seal must meet the specifications of the application (resistant to temperature and medium).
- If the flange is PTFE-clad, this generally suffices as the seal up to the permitted operating pressure.

Probe with PTFE-clad flange

Note!
Use spring washers (1).
It is recommended to retighten the flange bolts periodically, depending on process temperature and pressure. Recommended torque: 60 to 100 Nm.

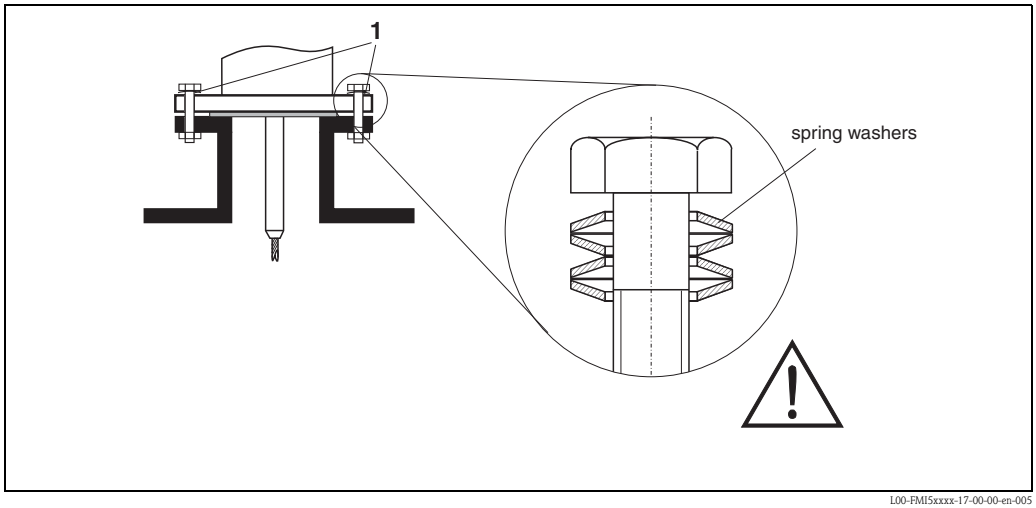

L00-FMI5xxxx-17-00-00-en-005

3.8.1 Aligning the housing

The housing can be rotated 270° to align the cable entry.
For an even better way of preventing moisture penetration, we recommend you route the connecting cable downwards before the cable gland and secure it with a cable tie. This is particularly recommended when mounting outdoors.

Housing
- Unscrew cover
- Loosen Phillips screw at bottom of housing by turning the screw 3 to 4 times
- Turn the housing to the desired position (max. 270°, from one stop to the next)
- Tighten Phillips screw at bottom of housing.

Note!
For housing type T13 with a separate connection compartment, the Phillips screw for aligning the housing is also located in the electronics compartment.

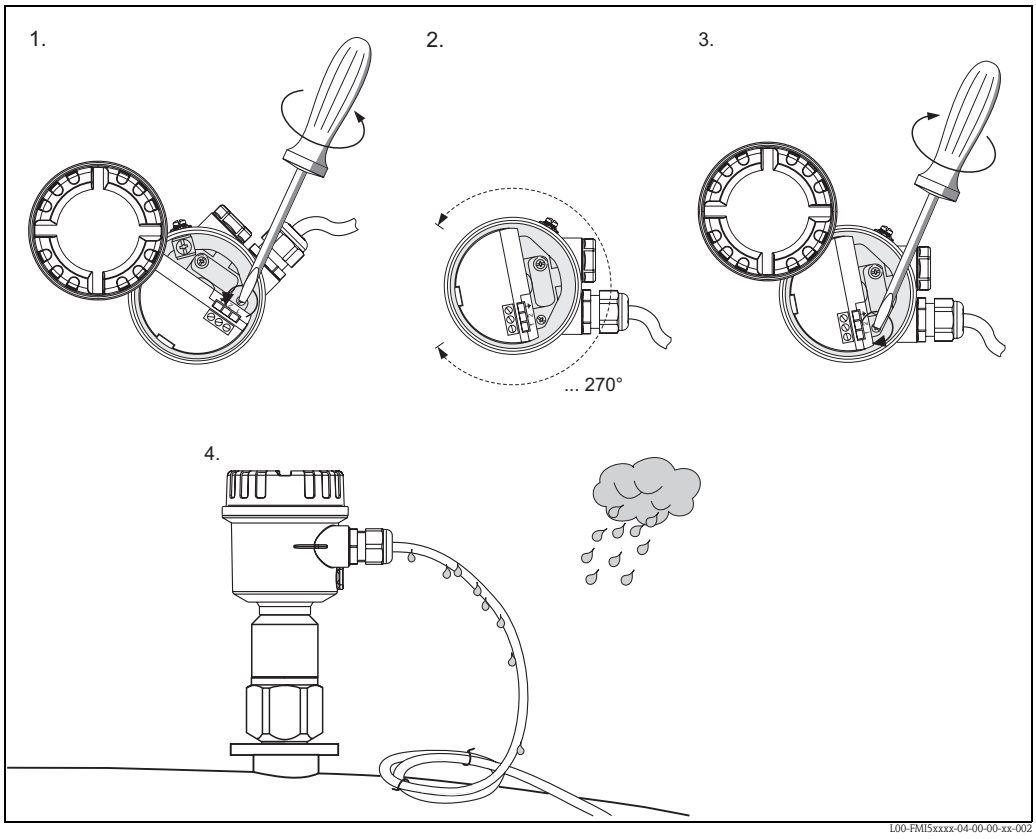

1. Loosen clamping screw until the housing rotates easily.
2. Align the housing.
3. Tighten clamping screw (< 1 Nm) until the housing can no longer be rotated.
4. Additional protection against moisture penetration for electronics compartment.

3.8.2 Sealing the probe housing

No water should enter the device when performing installation, connection and configuration tasks. Always seal the housing cover and cable entries securely.

The O-ring seal on the housing cover is shipped with a coat of special lubricant applied. In this way, the cover can be sealed tight and the aluminum thread does not bite when screwing down. Never use mineral oil-based grease as this destroys the O-ring.

3.9 Post-installation check

After installing the measuring device, carry out the following checks:
- Is the device damaged (visual inspection)?
- Does the device meet the specifications at the measuring point with regard to process temperature/pressure, ambient temperature, measuring range etc.?
- Has the process connection been tightened with the appropriate tightening torque?
- Are the measuring point number and labeling correct (visual inspection)?
- Is the device adequately protected against precipitation and direct sunshine?

3.9.1 Measuring range

- Measuring frequency: 500 kHz
- Span: ΔC = 25 to 4000 pF recommended (2 to 4000 pF possible)
- Final capacitance: C_E = max. 4000 pF
- Adjustable initial capacitance:
  - C_A = 0 to 2000 pF (< 6 m probe length)
  - C_A = 0 to 4000 pF (> 6 m probe length)

4 Wiring

Caution!
Before connecting the supply voltage, note the following:
- The supply voltage must match the data specified on the nameplate (1).
- Switch off the supply voltage before connecting the device.
- Connect the potential equalization to the ground terminal on the sensor.

Note!
- When using the probe in hazardous areas, the relevant national standards and the information in the safety instructions (XA) must also be observed.
- Use the specified cable gland only.

4.1 Recommendations for connection

4.1.1 Potential equalization

Caution!
In Ex-applications, the screen may only be grounded on the sensor side.

Connect the potential equalization to the outer ground terminal of the housing.
In the case of the stainless steel housing F15, the ground terminal (depending on the version) can also be located in the housing.
For further safety instructions, please refer to the separate documentation for applications in hazardous areas.

4.1.2 Electromagnetic compatibility (EMC)

Interference emission to EN 61326, Electrical Equipment Class B. Interference immunity to EN 61326, Annex A (Industrial) and NAMUR Recommendation NE 21 (EMC).

4.1.3 Cable specification

The electronic inserts can be connected using commercially available instrument cables.
When using shielded instrument cables, it is recommended to connect the shielding on both sides to optimize the shielding effect (if potential equalization is present).

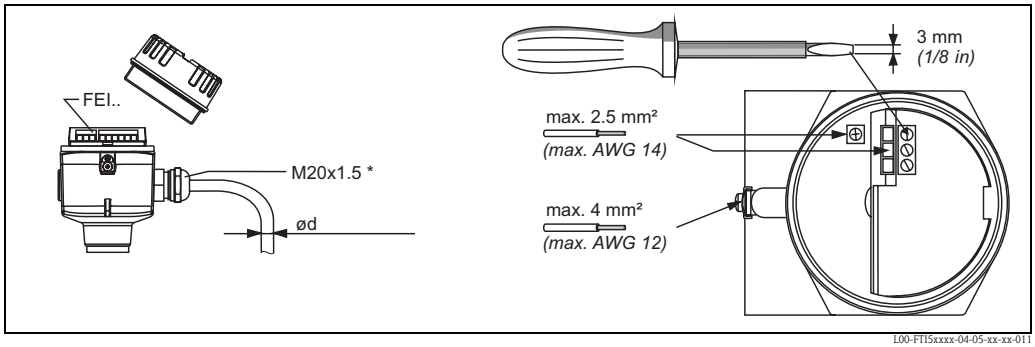

** Cable entries*

Nickel-plated brass: ∅d = 7 to 10.5 mm (0.28 to 0.41 in)

Synthetic material: ∅d = 5 to 10 mm (0.2 to 0.38 in)

Stainless steel: ∅d = 7 to 12 mm (0.28 to 0.47 in)

4.1.4 Connector

For the version with a connector M12, the housing does not have to be opened for connecting the signal line.

PIN assignment for plug M12

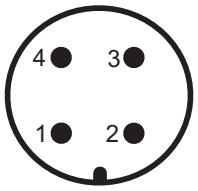

L00-FTI5xxxx-04-06-xx-xx-015

PIN	2-Wire Electronic Insert FEI57C
1	+
2	not used
3	–
4	ground

4.2 Wiring and connecting

Connection compartment

Determining the explosion protection:

Housing	Standard	Ex ia	Ex d	Gas-tight process seal
Polyester housing F16	X	X	–	–
Stainless steel housing F15	X	X	–	–
Aluminum housing F17	X	X	–	–
Aluminum housing F13	X	X	X	X
Stainless steel housing F27	X	X	X	X
Aluminum housing T13 (with separate connection compartment)	X	X	X	X

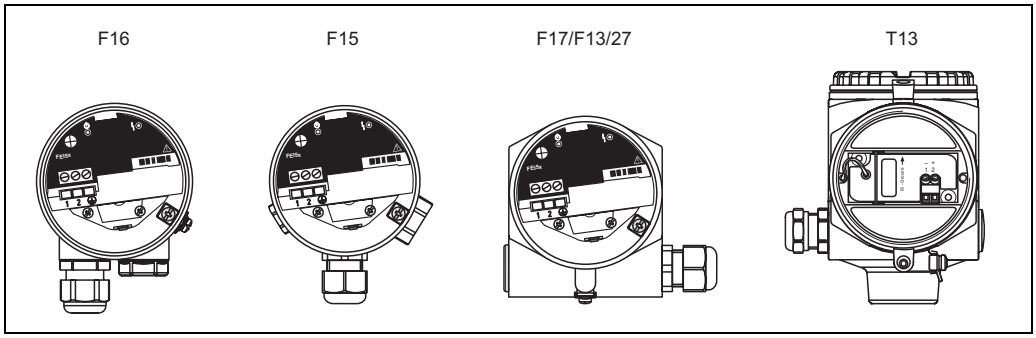

L00-FMI5xxxx-04-00-00-xx-001

To connect the electronic insert to the power supply, proceed as follows:

a. Unscrew the housing cover (1).

b. Release the cable gland (2) and insert the cable (3).

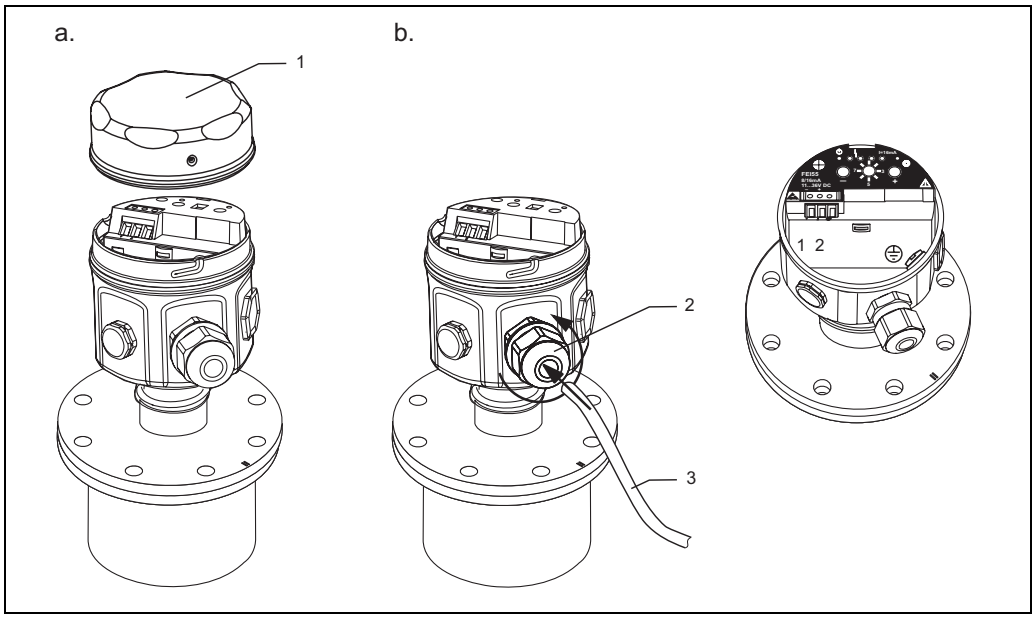

L00-FTI5xxxx-04-06-xx-xx-003

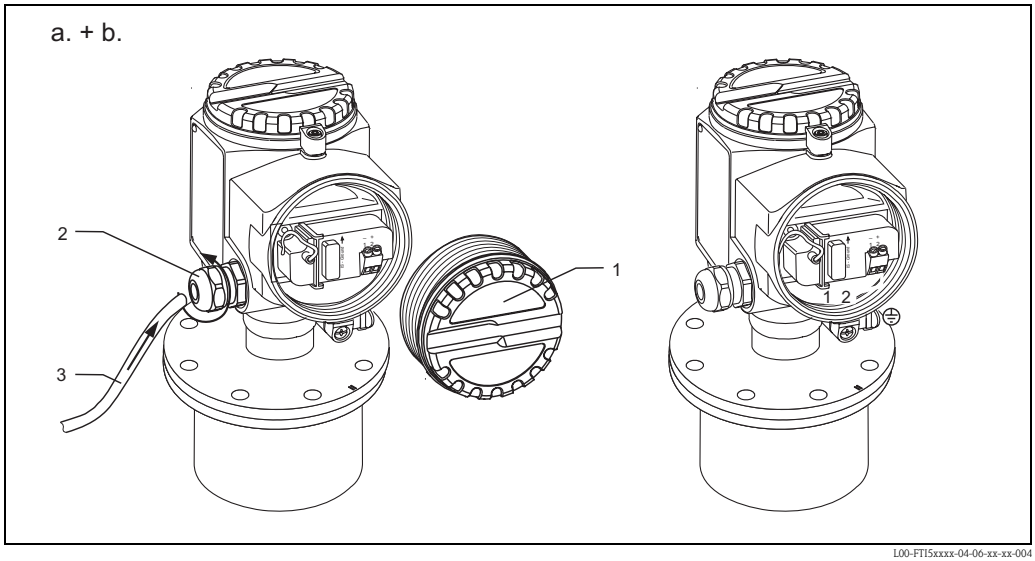

L00-FTI5xxxx-04-06-xx-xx-004

Information on connecting shielded cables is provided in TI241 "EMC test procedures".

Cable entry

Cable gland: M20x1.5
Cable entry: G ½ or NPT ½, NPT ¾

Supply voltage

14.8 V DC from associated supply unit (e.g. FMC662)

Power consumption

Approx. 150 mW

Current consumption

Max. 10 mA

4.2.1 Connecting the FEI57C to Silometer FMX570

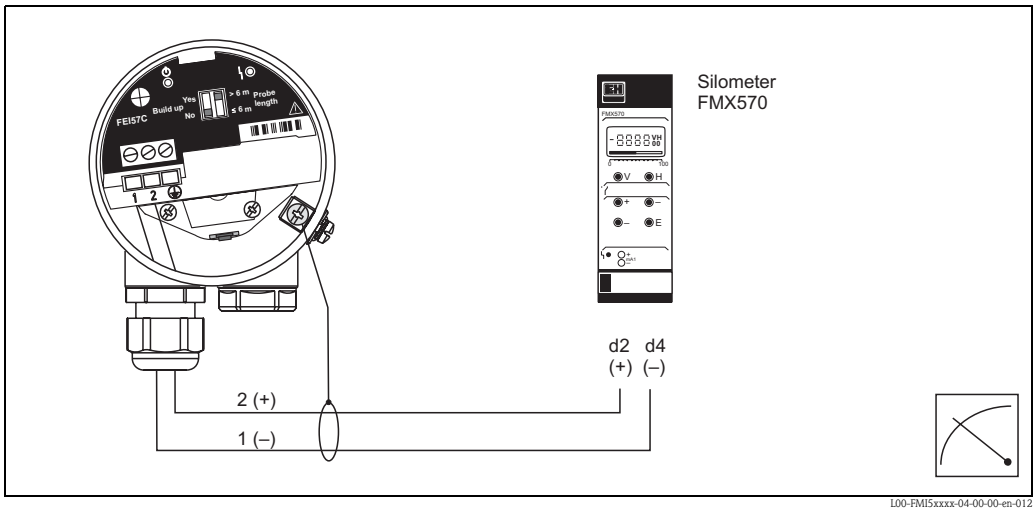

The Silometer FMX570 is no longer available.

4.2.2 Connecting the FEI57C to Silometer FMC671Z

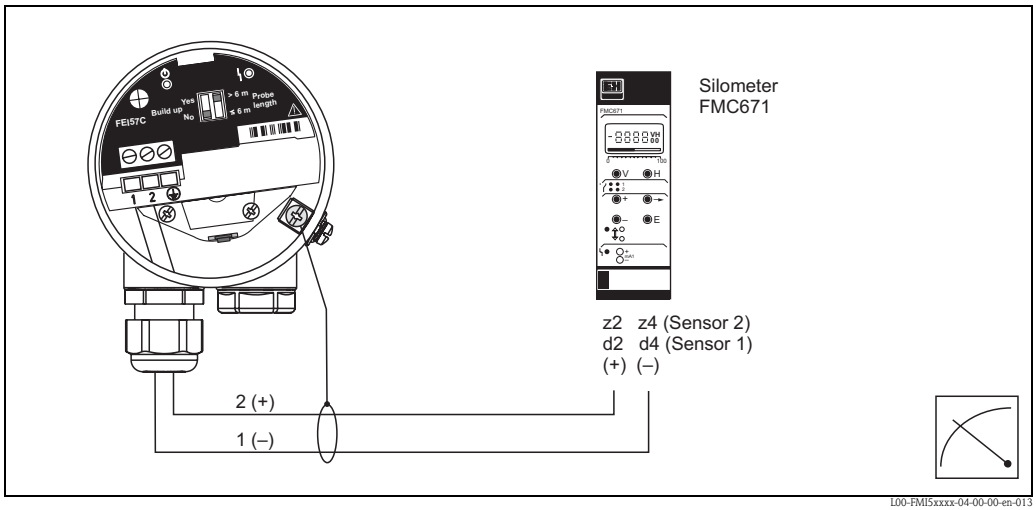

The Silometer FMC671Z is no longer available.

4.2.3 Connecting the FEI57C to Prolevel FMC661, FMC662

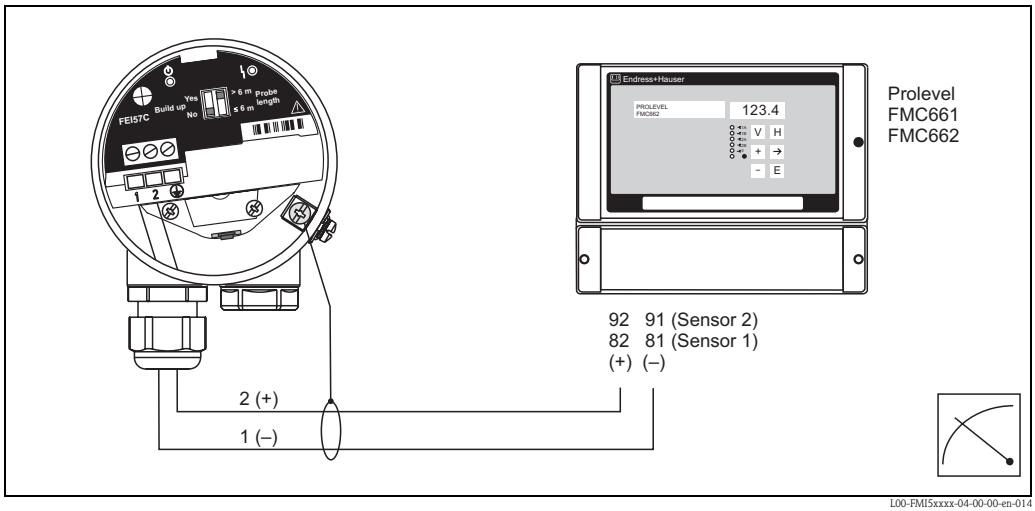

The Prolevel FMC661 and FMC662 are no longer available.

4.3 Post-connection check

After wiring the measuring device, carry out the following checks:
- Is the terminal assignment correct? (→ 30)
- Is the cable gland sealed tight?
- Is the housing cover screwed down until the stop?
- If power supply is present:
  Is the device operational and is the green LED flashing?

5 Operation

5.1 Operating options

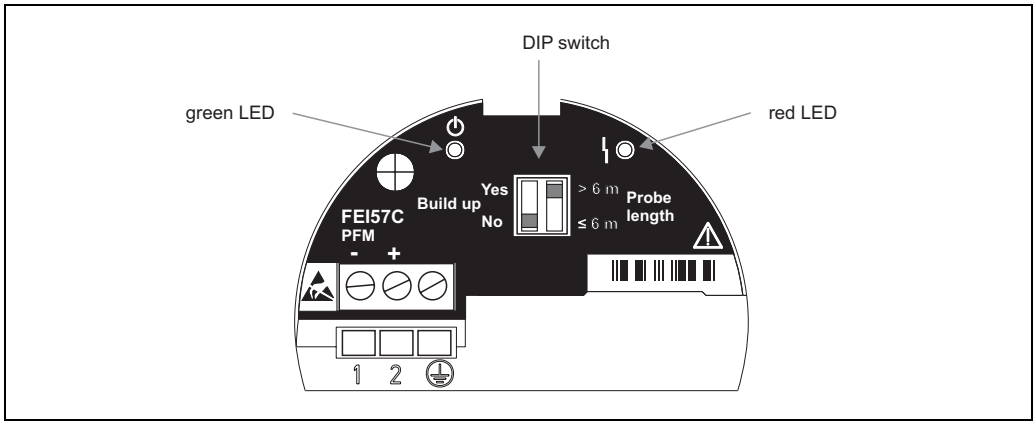

L00-FMI5xxxx-07-05-xx-en-101

5.2 Display and operating elements

Green LED (⏻ indicates operation)
- Flashes every 5 s:
  Indicates that the device is ready for operation.

Red LED (ϟ indicates a fault or malfunction)
- Flashes five times a second (signal: alarm):
  The PFM output outputs an error current signal and sets the output of the connected switching unit to 3.6 mA or 22 mA. The switching unit then outputs an alarm itself.
- Flashes once a second (signal: warning):
  The temperature in the electronic insert is outside the permitted temperature range.

DIP switch (build up YES/NO)
- Build up YES:
  This setting is recommended for media that cause heavy buildup, e.g. honey.
- Build up NO:
  This setting is recommended for media that do not cause buildup, e.g. water.

DIP switch (probe length > 6 m, < 6 m)
- Rope probe length > 6 m:
  Measuring range 0 to 4000 pF
- Rope probe length < 6 m:
  Measuring range 0 to 2000 pF
- Rod probe 0 to 2000 pF at ≤ 4000 mm

5.3 Error messages

The red LED signals the error messages.

6 Commissioning

6.1 Function check

Make sure that the post-installation check and final check have been completed before you start your measuring point:

- For the "Post-installation check" checklist, see → 26
- For the "Post-connection check" checklist, see → 31

6.2 Transmitter



Note!

- Please note that the settings on the electronic insert affect the function of the switching unit.
- For further commissioning, please refer to the Operating Instructions of the transmitter power supply unit. The device documentation of these devices is also available for download at www.endress.com => Download => e.g. product root: FMX570.

7 Maintenance

No special maintenance work is required for the Liquicap M level transmitter.

External cleaning

When externally cleaning Liquicap M, make sure that the cleaning agent used does not attack or corrode the housing surface or seals.

Cleaning the probe

Depending on the application, buildup (contamination and soiling) can form on the probe rod. A high degree of material buildup can affect the measurement result. If the medium tends to create a high degree of buildup, regular cleaning is recommended. When hosing down or during mechanical cleaning, it is important to make sure that the insulation of the probe rod is not damaged. If cleaning agents are used make sure the material is resistant to them!

Seals

The process seals of the sensor should be replaced periodically, especially when using molded seals (aseptic version)! The intervals between seal replacement depend on the frequency of the cleaning cycles and on the fluid and cleaning temperature.

Repair

The Endress+Hauser repair concept is devised in such a way that the devices have a modular design and repairs can be carried out by the customers.
Spare parts are grouped into handy kits with related replacement instructions. The "Spare parts" section lists all the spare part kits, including the order numbers, which you can order from Endress+Hauser for repairing Liquicap M. For further information on service and spare parts, please contact Endress+Hauser Service.

Repairing Ex-certified devices

The following information also has to be taken into account when repairing Ex-certified devices:
- Ex-certified devices may only be repaired by experienced, skilled staff or by Endress+Hauser Service.
- Applicable standards, national Ex-area regulations as well as the Safety Instructions (XA) and certificates must be observed.
- Only genuine spare parts from Endress+Hauser may be used.
- When ordering spare parts, please note the device designation on the nameplate. Parts can only be replaced by the same parts.
- Repairs must be carried out in accordance with the instructions. Following a repair, the individual testing specified for the device must be carried out.
- Certified devices can only be converted to other certified device versions by Endress+Hauser Service.
- Every repair and conversion made to the device must be documented.

8 Accessories

8.1 Protective cover

For F13 and F17 housing
Order number: 71040497

For F16 housing
Order number: 71127760

8.2 Shortening set for FMI52

For Liquicap M FMI52 (no hygienic approval: EHEDG, 3A)
Order number: 942901-0001

8.3 Commubox FXA195 HART

For intrinsically safe HART communication with FieldCare via the RS232C interface or USB.

8.4 HAW56x surge arrester

Surge arrester for limiting overvoltage in signal lines and components: see Technical Information TI401F.

8.5 Weld-in adapter

All the weld-in adapters available are described in the document TI00426F.
www.endress.com ➔ Country ➔ Download ➔ Advanced ➔ Documentation code ➔ TI00426F.

9 Troubleshooting

9.1 Error analysis

Cause/error	**Green LED (indicates operation) is not flashing**	**Red LED (indicates a fault) flashes five times a second (s)**	**Red LED (indicates a fault) flashes once a second (s)**
Check terminal assignment between supply unit and FEI57C	X	-	-
Check supply voltage to supply unit	X	-	-
Check installation state of FEI57C	X	-	-
Measuring range exceeded => capacitance too high at the probe	-	The PFM output outputs 3210 Hz	-
Faulty probe insulation	-	The PFM output outputs 3200 Hz	-
Measuring range exceeded => probe generates a short-circuit	-	The PFM output outputs 3200 Hz	-

Cause/error	Green LED (indicates operation) is not flashing	Red LED (indicates a fault) flashes five times a second (s)	Red LED (indicates a fault) flashes once a second (s)
The temperature in the electronic insert is outside the permitted temperature range.	-	The PFM output outputs 3100 to 3190 Hz	The temperature in the electronic insert is outside the permitted temperature range.

9.2 Application errors

Error	Remedial action
Measured error caused by buildup on the probe	Set the DIP switch for buildup compensation to the "YES" position
Measuring range too small	Incorrect measuring range selected. Set the DIP switch for the probe length to the setting > 6 m

9.3 Possible measuring errors

Error	Remedial measures
Measured value is incorrect	1. Verify empty and full calibration. 2. Clean probe if necessary, verify probe 3. If necessary, alter better installation position of probe (do not mount in filling curtain) 4. Check ground from process connection to tank wall. Resistance measurement < 1 Ω) 5. Check probe insulation (resistance measurement) > 800 kΩ (only possible for conductive media) 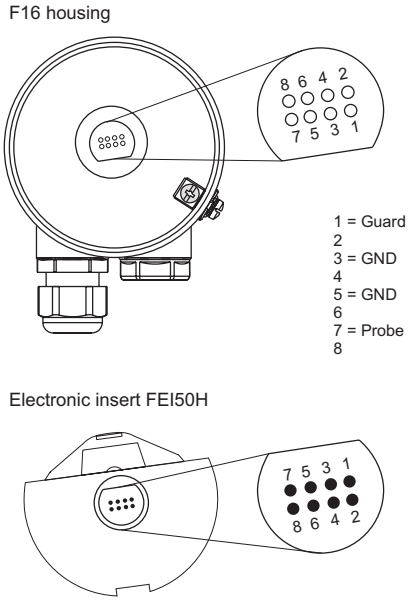
If the surface is turbulent, the measured value jumps sporadically to higher levels	Increase output damping

9.4 Spare Parts

An overview of the spare parts for your device is available in the internet at www.endress.com. To obtain information on the spare parts, proceed as follows:

1. Go to "www.endress.com" and select your country.
2. Click "Instruments".

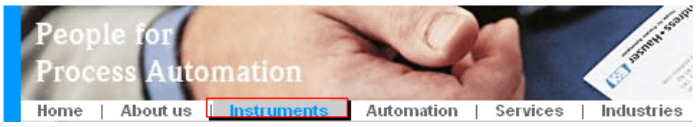

3. Enter the product name into the "product name" field.

Endress+Hauser product search

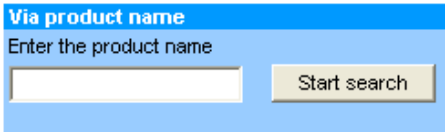

4. Select the device.
5. Click the "Accessories/Spare parts" tab.

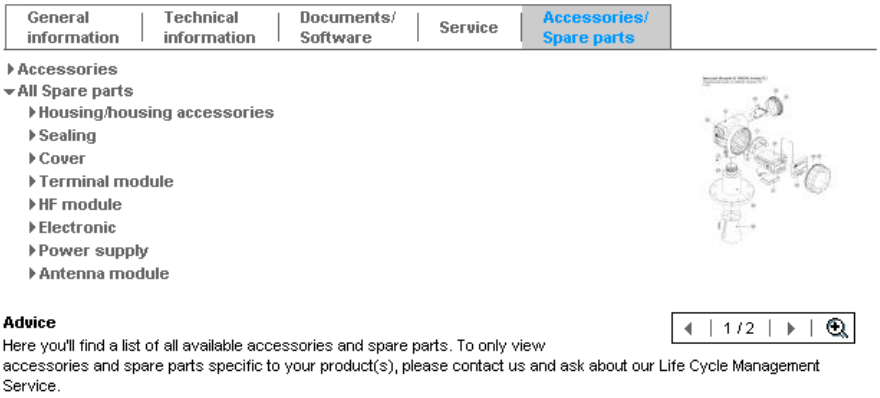

6. Select the required spare parts (You may also use the overview drawing on the right side of the screen.)

When ordering spare parts, always quote the serial number indicated on the nameplate. As far as necessary, the spare parts also include replacement instructions.

9.5 Return

The following measures must be taken before returning a device to Endress+Hauser for repair:
- Remove all traces of fluid. Pay particular attention to crevices and grooves for seals into which fluid can penetrate. This is particularly important if the fluid is hazardous to health, e.g. flammable, toxic, caustic, carcinogenic etc.
- Always enclose a fully completed "Declaration of Contamination" with the device (a master copy of the "Declaration of Contamination" can be found at the end of these Operating Instructions). Only then can Endress+Hauser check or repair a returned device.
- If necessary, enclose special handling instructions when returning the device, e.g. a safety data sheet in accordance with EN 91/155/EEC.

In addition, specify the following:
- The chemical and physical properties of the fluid
- A description of the application
- A description of the error that occurred (give error code where applicable)
- Operating time of the device

9.6 Disposal

When disposing of the device, make sure the device components are separated based on the materials used and recycled where possible.

9.7 Software history

Software-Version / Date	Software updates	Documentation
FW: V 01.00.00 / 06.2005	Original software	-
HW: V 01.00	-	-

9.8 Contact addresses at Endress+Hauser

On the back page of these Operating Instructions, you can find an internet address for Endress+Hauser. The web site provides contact addresses that you can use in case of any questions.

10 Technical data

10.1 Technical data: probe

10.1.1 Capacitance values of the probe

- Basic capacitance: approx. 18 pF

10.1.2 Additional capacitance

- Mount the probe at a minimum distance of 50 mm from a conductive container wall:
  Probe rod: approx. 1.3 pF/100 mm in air
  Probe rope: approx. 1.0 pF/100 mm in air
- Fully insulated probe rod in water:
  Approx. 38 pF/100 mm (16 mm rod)
  Approx. 45 pF/100 mm (10 mm rod)
  Approx. 50 pF/100 mm (22 mm rod)
- Insulated probe rope in water: approx. 19 pF/100 mm
- Rod probe with ground tube:
  – Insulated probe rod: approx. 6.4 pF/100 mm in air
  – Insulated probe rod: approx. 38 pF/100 mm in water (16 mm rod)
  – Insulated probe rod: approx. 45 pF/100 mm in water (10 mm rod)

10.1.3 Probe lengths for continuous measurement in conductive liquids

- Rod probe (range 0 to 2000 pF at ≤ 4000 mm)
- Rope probe < 6 m (range 0 to 2000 pF)
- Rope probe > 6 m (range 0 to 4000 pF)

10.2 Input

10.2.1 Measured variable

Continuous measurement of change in capacitance between probe rod and container wall or ground tube, depending on the level of the liquid.

Probe covered => high capacitance
Probe not covered => low capacitance

10.2.2 Measuring range

- Measuring frequency: 500 kHz
- Span: ΔC = 25 to 4000 pF recommended (2 to 4000 pF possible)
- Final capacitance: C_E = max. 4000 pF
- Adjustable initial capacitance:
  - C_A = 0 to 2000 pF (< 6 m probe length)
  - C_A = 0 to 4000 pF (> 6 m probe length)

10.3 Output

10.3.1 Output signal

The transmitter superimposes current pulses (PFM signal 60 to 2800 Hz) with a pulse width of approx. 100 µs and a current strength of approx. 8 mA on the supply current (approx. 8 mA).

10.3.2 Signal on alarm

Fault diagnosis can be called up via:

- Local display: red LED
- Local display at switching unit

10.3.3 Linearization

Linearization is performed in the transmitters.

10.4 Performance characteristics

10.4.1 Reference operating conditions

- Room temperature: +20 °C ±5 °C
- Span
  - Standard measuring range: 5 to 2000 pF
  - Extended measuring range: 5 to 4000 pF
  - Span for reference: 5 to 4000 pF (corresponds to approx. 1 m probe length)

10.4.2 Maximum measured error

- Non-repeatability (reproducibility) as per DIN 61298-2: max. ±0.1 %
- Non-linearity for limit point setting (linearity) as per DIN 61298-2: max. ±0.5 %

10.4.3 Influence of ambient temperature

Electronic insert

< 0.06 %/10 K related to the full scale value

Separate housing

Change in capacitance of connecting cable 0.015 pF/m per K

10.4.4 Switch-on behavior

FEI57C
1.5 s (stable measured value after switch-on procedure). Start-up in safe status (22mA).

10.4.5 Measured value reaction time

FEI57C
t_1 = 0.3 s

Note!
Observe integration time of switching unit

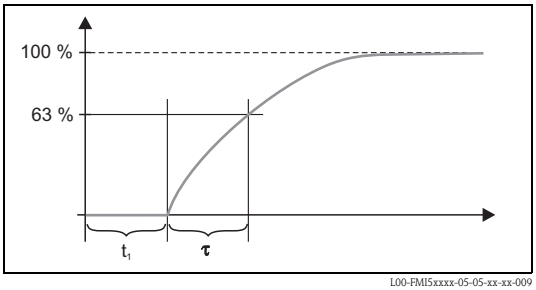

L00-FMI5xxxx-05-05-xx-xx-009

τ = *Output damping*
t_1 = *Dead time*

10.4.6 Accuracy of factory calibration

	Probe length < 2 m	Probe length > 2 m
Empty calibration (0 %)	≤ 5 mm	Approx. 2 %
Full calibration (100 %)	≤ 5 mm	Approx. 2 %

Medium conductivity ≥ 100 µS/cm
Minimum distance to container wall = 250 mm

✎ Note!
In an installed state, recalibration is only necessary if:
- The 0 % or the 100 % value have to be adjusted specifically for the customer.
- The liquid is not conductive.
- The probe distance to the tank wall is < 250 mm

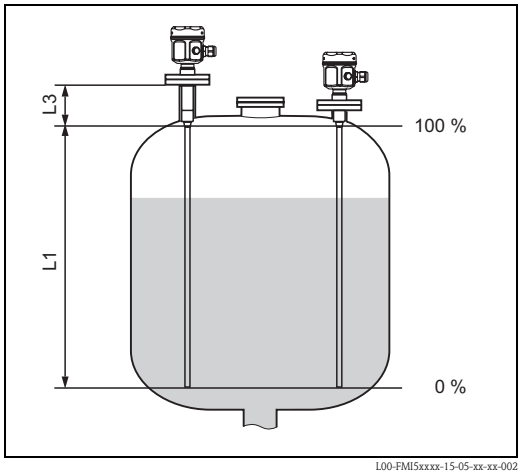

L00-FMI5xxxx-15-05-xx-xx-002

10.4.7 Resolution

FEI57C

- Zero frequency f_0 60 Hz:
  Sensitivity of the electronic insert = 0.685 Hz/pF
  Entry in switching unit FMC671 under V3H5 and V3H6 or V7H5 and V7H6

10.5 Power supply

10.5.1 Electrical connection

Connection compartment

Five types of housing are available:

	Standard	Ex ia	Ex d	Gas-tight process seal
Polyester housing F16	X	X	–	–
Stainless steel housing F15	X	X	–	–
Aluminum housing F17	X	X	–	–
Aluminum housing F13	X	X	–	X
Aluminum housing T13 (with separate connection compartment)	X	X	–	X

10.5.2 Terminal assignment

2-wire, PFM

The twin-core, shielded connecting cable with a cable resistance of max.
50 Ω is connected to the screw terminals (conductor cross-section 0.5 to 2.5 mm) in the connection compartment. The shielding must be connected at the sensor and power supply. Protective circuits against reverse polarity, HF influences and overvoltage peaks are integrated (see TI00241F "EMC test procedures").

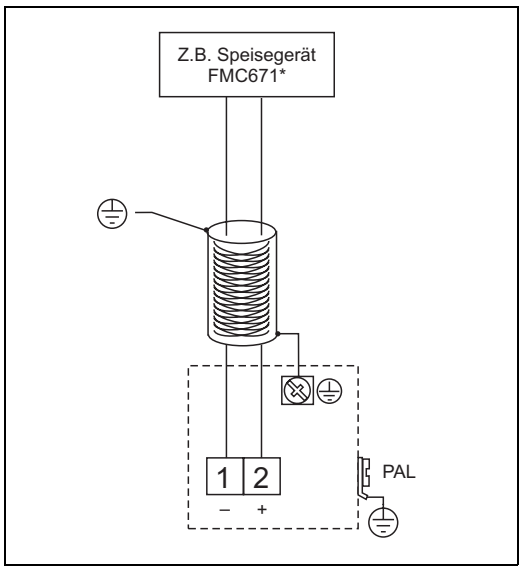

L00-FMI5xxxx-04-00-00-en-003

* Product discontinued at end of 2006.

10.5.3 Supply voltage

The following voltage is the terminal voltage directly at the device:

- 14.8 V DC from associated supply unit (e.g. FMC662)

Note!
The electronic insert has integrated reverse polarity protection.

10.5.4 Cable entry

- Cable gland: M20x1.5
- Cable entry: G ½ or NPT ½, NPT ¾

10.5.5 Power consumption

Max. 250 mW

10.5.6 Current consumption

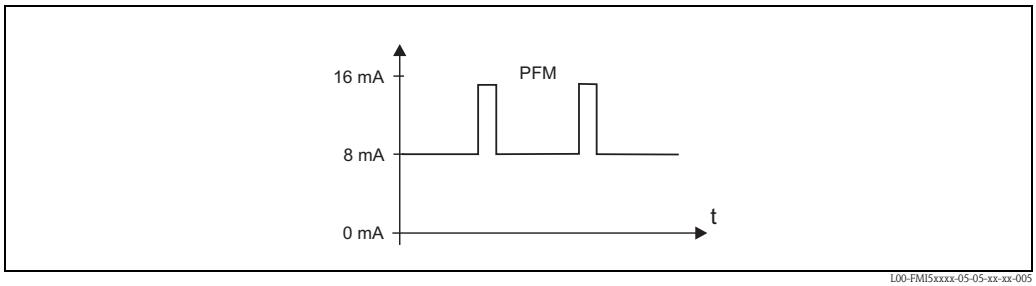

L00-FMI5xxxx-05-05-xx-xx-005

Frequency: 60 to 2800 Hz

10.6 Operating conditions: Environment

10.6.1 Ambient temperature range

- –50 to +70 °C
- –40 to +70 °C (with F16 housing)

- Observe derating → 📄 44
- If operating outdoors, use a protective cover! → 📄 35.

10.6.2 Storage temperature

–50 to +85 °C

10.6.3 Climate class

DIN EN 60068-2-38/IEC 68-2-38: Z/AD check

10.6.4 Vibration resistance

DIN EN 60068-2-64/IEC 68-2-64: 20 Hz– 2000 Hz; 0.01 g^2/Hz

10.6.5 Shock resistance

DIN EN 60068-2-27/IEC 68-2-27: 30g acceleration

10.6.6 Cleaning

Housing:
When cleaning, make sure that the cleaning agent used does not attack or corrode the housing surface or seals.

Probe:
Depending on the application, buildup (contamination and soiling) can form on the probe rod. A high degree of material buildup can affect the measurement result. If the medium tends to create a high degree of buildup, regular cleaning is recommended. When hosing down or during mechanical cleaning, it is important to make sure that the insulation of the probe rod is not damaged.

10.6.7 Degree of protection

	IP66*	IP67*	IP68*	NEMA4X**
Polyester housing F16	X	X	-	X
Stainless steel housing F15	X	X	-	X
Aluminum housing F17	X	X	-	X
Aluminum housing F13 with gas-tight process seal	X	–	X***	X
Stainless steel housing F27 with gas-tight process seal	X	X	X***	X
Aluminum housing T13 with gas-tight process seal and separate connection compartment (Ex d)	X	–	X***	X
Separate housing	X	–	X***	X

* As per EN60529
** As per NEMA 250
*** Only with M20 cable entry or G1/2 thread

10.6.8 Electromagnetic compatibility (EMC)

- Interference emission to EN 61326, Electrical Equipment Class B
  Interference immunity to EN 61326, Annex A (Industrial) and NAMUR Recommendation NE 21 (EMC)
- A usual commercial instrument cable can be used.

10.7 Operating conditions: Process

10.7.1 Process temperature range

The following diagrams apply for:

- Rod and rope version
- Insulation: PTFE, PFA, FEP
- Standard applications outside hazardous areas

Note!
The temperature is restricted to T_a –40 °C if the polyester housing F16 is used and if additional option B is selected (free from paint-wetting impairment substances, FMI51).

With compact housing

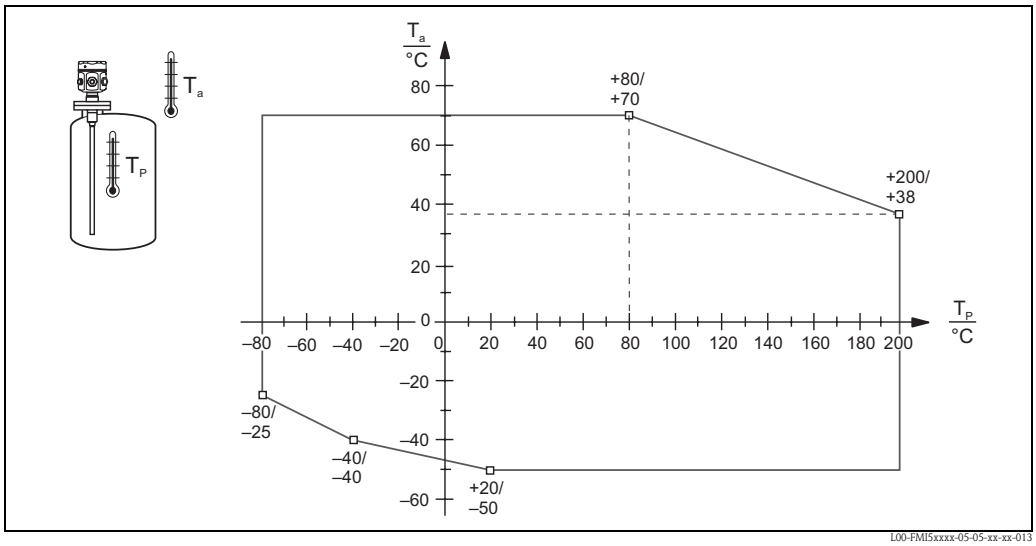

Ta: Ambient temperature
TP: Process temperature

With separate housing

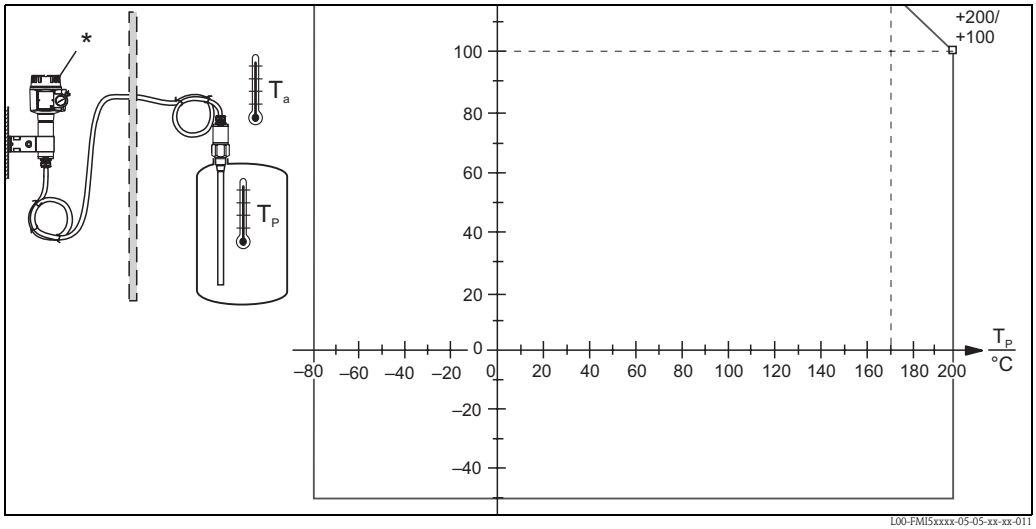

T_a = Ambient temperature
T_P = Process temperature
** The permitted ambient temperature at the separate housing is the same as indicated for the compact housing →* *44.*

10.7.2 Process pressure limits

Probe ø10 mm (including insulation)

–1 to 25 bar

Probe ø16 mm (including insulation)

- –1 to 100 bar
- In the event of an inactive length, the maximum permitted process pressure is 63 bar
- In the event of CRN approval and inactive length, the maximum permitted process pressure is 32 bar.

Probe ø22 mm (including insulation)

–1 to 50 bar

Refer to the following standards for the pressure values permitted at higher temperatures:

- EN 1092-1: 2005 Table, Appendix G2
  With regard to its resistance/temperature property, the material 1.4435 is identical to 1.4404 (AISI 316L) which is grouped under 13E0 in EN 1092-1 Tab. 18. The chemical composition of the two materials can be identical.
- ASME B 16.5a - 1998 Tab. 2-2.2 F316
- ASME B 16.5a - 1998 Tab. 2.3.8 N10276
- JIS B 2220

The lowest value from the derating curves of the device and the selected flange applies.

10.7.3 Pressure and temperature derating

For process connections ½", ¾", 1", flanges < DN50, < ANSI 2", < JIS 10K (10 mm rod)
For process connections ¾", 1", flanges < DN50, < ANSI 2", < JIS 10K (16 mm rod)
Rod insulation: PTFE, PFA
Rope insulation: FEP, PFA

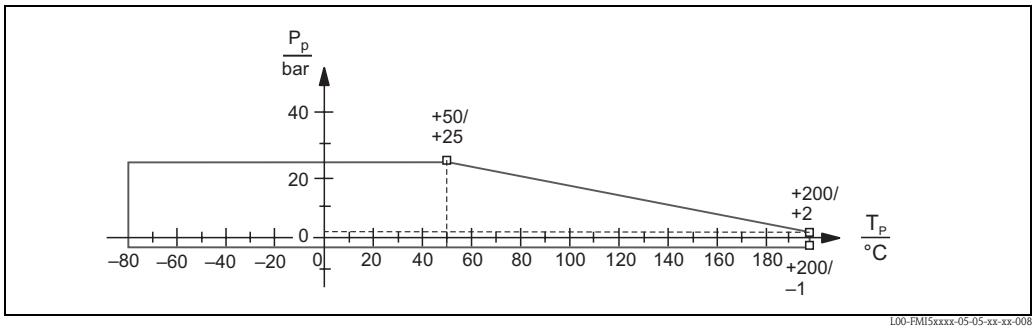

Pp : Process pressure
Tp : Process temperature

For process connections 1½", flanges ≥ DN50, ≥ ANSI 2", ≥ JIS 10K (16 mm rod)

Rod insulation: PTFE, PFA
Rope insulation: FEP, PFA

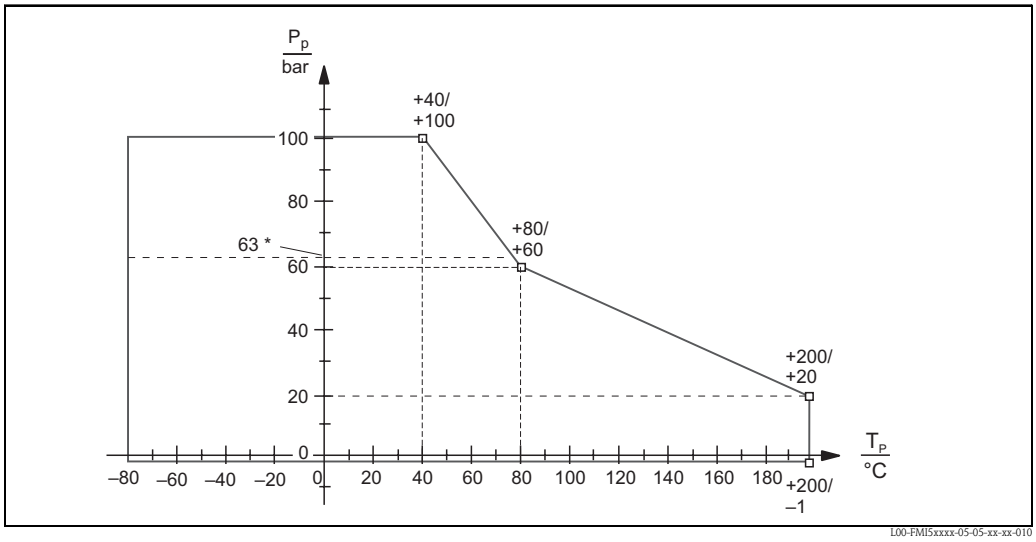

Pp : process pressure
Tp : process temperature
** For probes with an inactive length .*

With a fully insulated inactive length (22 mm rod):

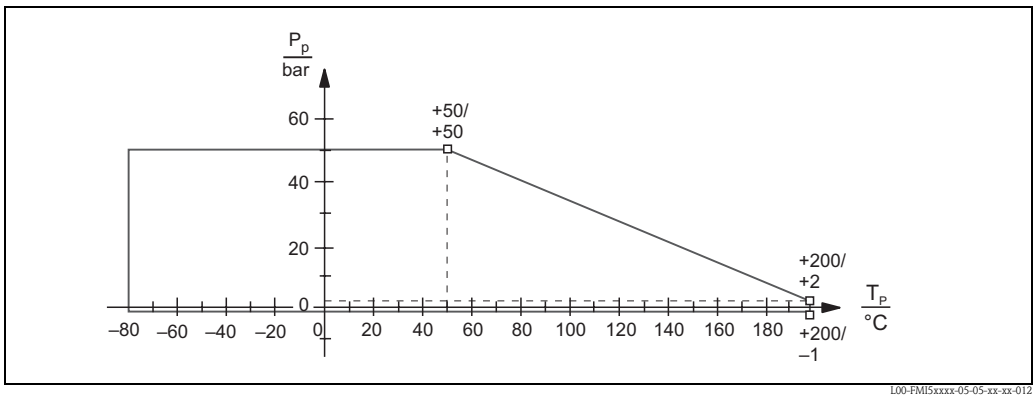

Pp : Process pressure
Tp : Process temperature

10.8 Certificates and approvals

10.8.1 Other standards and guidelines

EN 60529
Degrees of protection by housing (IP code)

EN 61010
Protection measures for electrical equipment for measurement, control, regulation and laboratory procedures

EN 61326
Interference emission (Class B equipment), interference immunity (Annex A – Industrial).

NAMUR
Association for Standards for Control and Regulation in the Chemical Industry

IEC 61508
Functional safety

10.8.2 Other approvals

- See also "Identification" on → 📄 5 ff.
- TSE Certificate of Suitability (FMI51)
  The following applies to wetted device components:
  – They do not contain any materials derived from animals.
  – No additives or operating materials derived from animals are used in production or processing.

  ✎ Note!
  The wetted device components are listed in the "Identification" section (→ 📄 5 ff.).
- AD2000
  The wetted material (316L) corresponds to AD2000 – W0/W2

10.9 Documentation

10.9.1 Technical Information

- Liquicap M FMI51, FMI52
  TI00401F/00

10.9.2 Certificates

ATEX safety instructions

- Liquicap M FMI51, FMI52
  ATEX II 1/2 G Ex ia IIC/IIB T3 to T6, II 1/2 D IP65 T 85 °C
  XA00327F/00/a3
- Liquicap M FMI51, FMI52
  ATEX II 1/2 G Ex d [ia] IIC/IIB T3 to T6
  XA00328F/00/a3
- Liquicap M FMI51, FMI52
  Ga/Gb Ex ia IIC T6 to T3; Ex ia D 20 / Ex tD A21 IP65 T90°C
  XA00423F/00/a3

NEPSI safety instructions

- Liquicap M FMI51, FMI52
  Ex ia IIC/IIB T3 to T6
  XA00417F/00/a3
- Liquicap M FMI51, FMI52
  Ex d [ia] IIC/IIB T3 to T6
  XA00418F/00/a3
- Liquicap M FMI51, FMI52
  Ex nA II T3 to T6, Ex nC IIC T3 to T6
  XA00430F/00/a3

Overfill protection DIBt (WHG)

- Liquicap M FMI51, FMI52
  ZE00265F/00/en

Functional safety (SIL2)

- Liquicap M FMI51, FMI52
  SD00198F/00/en

Control Drawings (CSA and FM)

- Liquicap M FMI51, FMI52
  FM
  ZD00220F/00/en
- Liquicap M FMI51, FMI52
  CSA
  ZD00221F/00/en

CRN registration

- CRN 0F1988.75

10.9.3 Patents

This product is protected by at least one of the following patents.
Further patents are pending.

- DE 103 22 279,
  WO 2004 102 133,
  US 2005 003 9528
- DE 203 13 695,
  WO 2005 025 015

Index

A
Accessories 35
Aligning the housing 25

C
Cable specification 27
Calibration error 36
CE mark 12
Certificates and approvals 46–47
Commissioning 33
Commubox 30, 35
Commubox FXA191/195 HART 35
Commuwin II 30
Connection 28, 30–31

D
Declaration of Conformity 12
Declaration of Contamination 37
Designated use 3
Disposal 38
DXR375 30

E
Electrical symbols 4
Electromagnetic compatibility (EMC) 27
Error messages 32
Ex area 3
External cleaning 34

F
Fieldbus connector 28
FXA191 30
FXA193 30

G
Ground tube 17

H
HART 30

I
Identification 5
Inactive length 17
Incoming acceptance 13
Installation 13

M
Maintenance 34
Marine approval (GL) 15
Measuring condition 15
Measuring range 26

N
Nameplate 5
Notes on safety conventions and icons 4

O
Operating menus 32
Operation 32
Operational safety 3
Orientation 14

P
Pipe mounting 22
Planning instructions 14
Post-connection check 31
Post-installation check 26
Potential equalization 27
Protective cover 35

R
Repair 34
Repairing Ex-certified devices 34
Return 37
RMA422 30
RN221N 30
Rod probes 16
Rope probes 19
Rotating the housing 25

S
Safety instructions 3–4
Sealing (housing) 26
Seals 34
Separate housing 21
Separate housing (shortening the connecting cable) 23
Shortening set 35
Shortening the rope 20
Spare Parts 37
Storage 13
Storage temperature 13

T
Technical data 38
Tensioning weight with tension 20
ToF Tool 30
Troubleshooting 35
Type of protection 4

W
Wall bracket 22
Wall mounting 22
Wiring 27

Endress+Hauser

People for Process Automation

Declaration of Hazardous Material and De-Contamination

Erklärung zur Kontamination und Reinigung

RA No. ☐☐☐☐☐☐☐☐

Please reference the Return Authorization Number (RA#), obtained from Endress+Hauser, on all paperwork and mark the RA# clearly on the outside of the box. If this procedure is not followed, it may result in the refusal of the package at our facility.

Bitte geben Sie die von E+H mitgeteilte Rücklieferungsnummer (RA#) auf allen Lieferpapieren an und vermerken Sie diese auch außen auf der Verpackung. Nichtbeachtung dieser Anweisung führt zur Ablehnung ihrer Lieferung.

Because of legal regulations and for the safety of our employees and operating equipment, we need the "Declaration of Hazardous Material and De-Contamination", with your signature, before your order can be handled. Please make absolutely sure to attach it to the outside of the packaging.

Aufgrund der gesetzlichen Vorschriften und zum Schutz unserer Mitarbeiter und Betriebseinrichtungen, benötigen wir die unterschriebene "Erklärung zur Kontamination und Reinigung", bevor Ihr Auftrag bearbeitet werden kann. Bringen Sie diese unbedingt außen an der Verpackung an.

Type of instrument / sensor
Geräte-/Sensortyp _____

Serial number
Seriennummer _____

☐ **Used as SIL device in a Safety Instrumented System /** *Einsatz als SIL Gerät in Schutzeinrichtungen*

Process data/ *Prozessdaten*

Temperature / *Temperatur* _____ [°F] _____ [°C]
Pressure / *Druck* _____ [psi] _____ [Pa]
Conductivity / *Leitfähigkeit* _____ [µS/cm]
Viscosity / *Viskosität* _____ [cp] _____ [mm^2/s]

Medium and warnings
Warnhinweise zum Medium

	Medium /concentration *Medium /Konzentration*	Identification CAS No.	 flammable *entzündlich*	 toxic *giftig*	 corrosive *ätzend*	 harmful/ irritant *gesundheits-schädlich/ reizend*	 other * *sonstiges**	 harmless *unbedenklich*
Process medium / *Medium im Prozess*								
Medium for process cleaning / *Medium zur Prozessreinigung*								
Returned part cleaned with / *Medium zur Endreinigung*								

* explosive; oxidising; dangerous for the environment; biological risk; radioactive
* *explosiv; brandfördernd; umweltgefährlich; biogefährlich; radioaktiv*

Please tick should one of the above be applicable, include safety data sheet and, if necessary, special handling instructions.
Zutreffendes ankreuzen; trifft einer der Warnhinweise zu, Sicherheitsdatenblatt und ggf. spezielle Handhabungsvorschriften beilegen.

Description of failure / *Fehlerbeschreibung* _____

_____

_____

Company data / *Angaben zum Absender*

Company / *Firma* _____

_____

Address / *Adresse*

_____

_____

Phone number of contact person / *Telefon-Nr. Ansprechpartner:*

_____

Fax / E-Mail _____

Your order No. / *Ihre Auftragsnr.* _____

"We hereby certify that this declaration is filled out truthfully and completely to the best of our knowledge.We further certify that the returned parts have been carefully cleaned. To the best of our knowledge they are free of any residues in dangerous quantities."

"Wir bestätigen, die vorliegende Erklärung nach unserem besten Wissen wahrheitsgetreu und vollständig ausgefüllt zu haben. Wir bestätigen weiter, dass die zurückgesandten Teile sorgfältig gereinigt wurden und nach unserem besten Wissen frei von Rückständen in gefahrbringender Menge sind."

_____ (place, date / *Ort, Datum*)

_____ Name, dept./ *Abt.* (please print / *bitte Druckschrift*)

_____ Signature / *Unterschrift*

www.endress.com/worldwide

Endress+Hauser

People for Process Automation

BA00297F/00/EN/13.10
71128821
CCS/FM+SGML 6.0

71128821