Technical Information
Levelflex FMP56, FMP57

Guided Level Radar

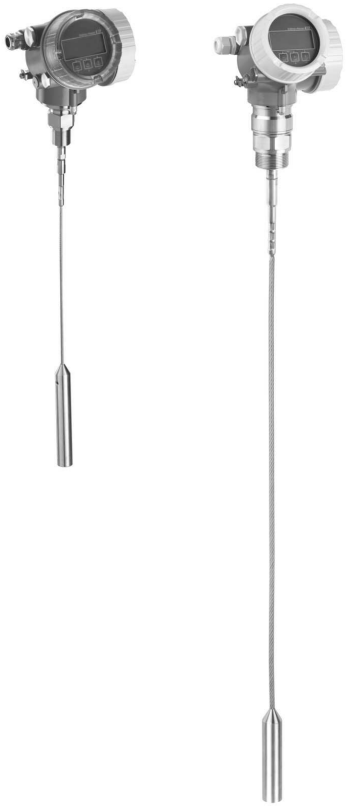

Level measurement in bulk solids

Application

- Rod or rope probe
- Process connection: Starting 3/4" thread or flange
- Temperature: −40 to +185 °C (−40 to +365 °F)
- Pressure: −1 to +16 bar (−14.5 to +232 psi)
- Maximum measuring range: Rod 4 m (13 ft); rope 45 m (148 ft)
- Accuracy: ±2 mm (±0.08 in)
- International explosion protection certificates; EN10204-3.1
- Linearity protocol (3-point, 5-point)

Your benefits

- Reliable measurement even for changing product and process conditions
- HistoROM data management for easy commissioning, maintenance and diagnostics
- Highest reliability due to Multi-Echo Tracking
- Hardware and software developed according to IEC 61508 (up to SIL3)
- Seamless integration into control or asset management systems
- Intuitive user interface in national languages
- Easy proof test for SIL

Endress+Hauser
People for Process Automation

Table of contents

Important document information 4
Symbols 4

Function and system design 6
Measuring principle 6
Measuring system 9

Input 11
Measured variable 11
Measuring range 11
Blocking distance 13
Measuring frequency spectrum 13

Output 14
Output signal 14
Signal on alarm 15
Linearization 15
Galvanic isolation 15
Protocol-specific data 16

Power supply 21
Terminal assignment 21
Device plug connectors 28
Power supply 29
Power consumption 31
Current consumption 31
Power supply failure 32
Potential equalization 32
Terminals 32
Cable entries 32
Cable specification 33
Overvoltage protection 34

Performance characteristics 35
Reference operating conditions 35
Maximum measured error 35
Resolution 36
Reaction time 37
Influence of ambient temperature 37

Mounting 38
Mounting requirements 38

Operating conditions: Environment 55
Ambient temperature range 55
Ambient temperature limits 55
Storage temperature 58
Climate class 58
Altitude according to IEC61010-1 Ed.3 58
Degree of protection 58
Vibration resistance 58
Cleaning the probe 58
Electromagnetic compatibility (EMC) 58

Process 59
Process temperature range 59
Process pressure range 59
Dielectric constant (DC) 59
Expansion of the rope probes through tension and temperature 59

Mechanical construction 60
Dimensions 60
Tolerance of probe length 64
Shortening probes 64
Weight 65
Materials: GT18 housing 66
Materials: GT19 housing 67
Materials: GT20 housing 68
Materials: Process connection 70
Materials: Probe 71
Materials: Mounting bracket 72
Materials: Adapter and cable for remote display 73
Materials: Weather protection cover 74

Operability 75
Operating concept 75
Local operation 75
Operation with remote display and operating module FHX50 76
Remote operation 76
System integration via Fieldgate 80

Certificates and approvals 81
CE mark 81
C-Tick symbol 81
Ex approval 81
Dual seal according to ANSI/ISA 12.27.01 81
Functional Safety 81
ASME B31.1 and B31.3 81
Marine certificate 81
Telecommunications 81
CRN-Zulassung 81
Track record 82
Other standards and guidelines 83

Ordering information 84
Ordering information 84
3-point linearity protocol (in preparation) 85
5-point linearity protocol 86
Customized parametrization 87

Accessories 88
Device-specific accessories 88
Communication-specific accessories 94
Service-specific accessories 95
System components 95

Documentation 96
Standard documentation 96
Supplementary documentation 96
Safety documentation 97

Registered trademarks 100

Patents 101

Important document information

Symbols

Safety symbols

Symbol	Meaning
 A0011189-EN	**DANGER!** This symbol alerts you to a dangerous situation. Failure to avoid this situation will result in serious or fatal injury.
 A0011190-EN	**WARNING!** This symbol alerts you to a dangerous situation. Failure to avoid this situation can result in serious or fatal injury.
 A0011191-EN	**CAUTION!** This symbol alerts you to a dangerous situation. Failure to avoid this situation can result in minor or medium injury.
 A0011192-EN	**NOTICE!** This symbol contains information on procedures and other facts which do not result in personal injury.

Electrical symbols

Symbol	Meaning
A0011197	**Direct current** A terminal to which DC voltage is applied or through which direct current flows.
A0011198	**Alternating current** A terminal to which alternating voltage is applied or through which alternating current flows.
 A0017381	**Direct current and alternating current** ▪ A terminal to which alternating voltage or DC voltage is applied. ▪ A terminal through which alternating current or direct current flows.
 A0011200	**Ground connection** A grounded terminal which, as far as the operator is concerned, is grounded via a grounding system.
 A0011199	**Protective ground connection** A terminal which must be connected to ground prior to establishing any other connections.
 A0011201	**Equipotential connection** A connection that has to be connected to the plant grounding system: This may be a potential equalization line or a star grounding system depending on national or company codes of practice.

Symbols for certain types of information

Symbol	Meaning
 A0011182	**Allowed** Indicates procedures, processes or actions that are allowed.
 A0011183	**Preferred** Indicates procedures, processes or actions that are preferred.
 A0011184	**Forbidden** Indicates procedures, processes or actions that are forbidden.
 A0011193	**Tip** Indicates additional information.
 A0011194	**Reference to documentation** Refers to the corresponding device documentation.

Symbol	Meaning
 A0011195	**Reference to page** Refers to the corresponding page number.
 A0011196	**Reference to graphic** Refers to the corresponding graphic number and page number.

Symbols in graphics

Symbol	Meaning
1, 2, 3 ...	Item numbers
1. , 2. , 3. ...	Series of steps
A, B, C, ...	Views
A-A, B-B, C-C, ...	Sections
 A0011187	**Hazardous area** Indicates a hazardous area.
 A0011188	**Safe area (non-hazardous area)** Indicates a non-hazardous location.

Function and system design

Measuring principle

Basic principles

The Levelflex is a "downward-looking" measuring system that functions according to the ToF method (ToF = Time of Flight). The distance from the reference point to the product surface is measured. High-frequency pulses are injected to a probe and led along the probe. The pulses are reflected by the product surface, received by the electronic evaluation unit and converted into level information. This method is also known as TDR (Time Domain Reflectometry).

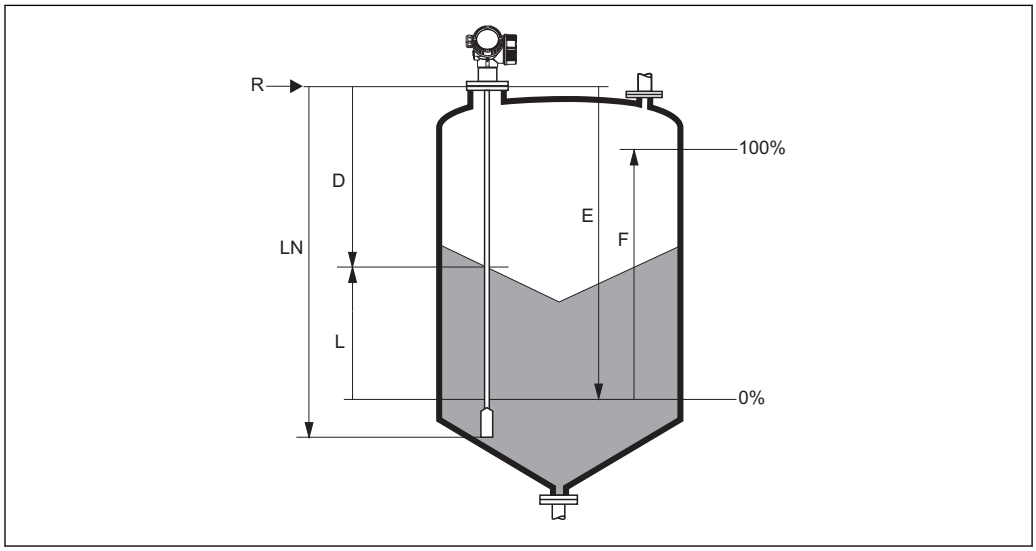

1 *Parameters for level measurement with the guided radar*

LN Probe length
D Distace
L Level
R Reference point of measurement
E Empty calibration (= zero)
F Full calibration (= span)

If, for rope probes, the DC value is less than 7, then measurement is not possible in the area of the straining weight (0 to 250 mm from end of probe; lower blocking distance).

Dielectric constant

The dielectric constant (DC) of the medium has a direct impact on the degree of reflection of the highfrequency pulses. In the case of large DC values, such as for water or ammonia, there is strong pulse reflection while, with low DC values, such as for hydrocarbons, weak pulse reflection is experienced.

Input

The reflected pulses are transmitted from the probe to the electronics. There, a microprocessor analyzes the signals and identifies the level echo which was generated by the reflection of the high-frequency pulses at the product surface. This clear signal detection system benefits from over 30 years' experience with pulse time-of-flight procedures that have been integrated into the development of the PulseMaster® software.

The distance D to the product surface is proportional to the time of flight t of the impulse:

$D = c \cdot t/2$,

where c is the speed of light.

Based on the known empty distance E, the level L is calculated:

$L = E - D$

The reference point R of the measurement is located at the process connection. For details see the dimensional drawing:
- FMP56: (→ 🖹 62)
- FMP57: (→ 🖹 63)

The Levelflex possesses functions for interference echo suppression that can be activated by the user. They guarantee that interference echoes from e.g. internals and struts are not interpreted as level echoes.

Output

The Levelflex is preset at the factory to the probe length ordered so that in most cases only the application parameters that automatically adapt the device to the measuring conditions need to be entered. For models with a current output, the factory adjustment for zero point E and span F is 4 mA and 20 mA, for digital outputs and the display module 0 % and 100 %. A linearization function with max. 32 points, which is based on a table entered manually or semi-automatically, can be activated on site or via remote operation. This function allows the level to be converted into units of volume or mass, for example.

Life cycle of the product

Engineering
- Universal measuring principle
- Measurement unaffected by medium properties
- Hardware and software developed according to SIL IEC 61508
- Genuine, direct interface measurement

Procurement
- Endress+Hauser being the world market leader in level measurement guarantees asset protection
- Worldwide support and service

Installation
- Special tools are not required
- Reverse polarity protection
- Modern, detachable terminals
- Main electronics protected by a separate connection compartment

Commissioning
- Fast, menu-guided commissioning in only 6 steps
- Plain text display in national languages reduces the risk of error or confusion
- Direct local access of all parameters
- Short instruction manual at the device

Operation
- Multi-echo tracking: Reliable measurement through self-learning echo-search algorithms taking into account the short-term and long-term history in order to check the found echoes for plausibility and to suppress interference echoes.
- Diagnostics in accordance with NAMUR NE107

Maintenance
- HistoROM: Data backup for instrument settings and measured values
- Exact instrument and process diagnosis to assist fast decisions with clear details concerning remedies
- Intuitive, menu-guided operating concept in national languages saves costs for training, maintenance and operation
- Cover of the electronics compartment can be opened in hazardous areas

Retirement
- Order code translation for subsequent models
- RoHS-conforming (Restriction of certain Hazardous Substances), unleaded soldering of electronic components
- Environmentally sound recycling concept

Measuring system

General notes on probe selection

- Normally, rope probes should be used for bulk solids, rod probes are only suitable for short measuring ranges up to approx. 2 m (6.6 ft) in bulk solids. This applies above all to applications in which the probe is installed laterally at an angle and for light and pourable bulk solids.
- In the case of large silos, the lateral pressure on the rope can be so high that a rope with plastic jacketing must be used. We recommend PA-coated ropes be used for cereal products such as wheat, flour etc.

Probe selection

The various types of probe in combination with the process connections are suitable for the following applications [1]:

Levelflex FMP56		
Type of probe	**Rope probe**	
	 A0011388	
Feature 060 - Probe:	**Option:**	
	LA	4 mm (316)
	LB	1/6" (316)
	NB	6 mm (PA>Steel)
	NE	1/4" (PA>Steel)
Max. probe length	12 m (40 ft)	
Max. tensile loading capacity	12 kN	
For application	level measurement in bulk solids	

1) If required, rod and rope probes can be replaced. They are secured with Nord-Lock washers or a thread coating. For further information on service and spare parts please contact the Endress+Hauser service.

Levelflex FMP57				
Type of probe	**Rod probe**		**Rope probe**	
	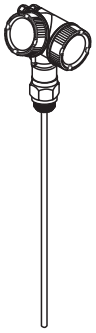 A0011387		 A0011388	
Feature 060 - Probe:	**Option:**		**Option:**	
	AE AF	16 mm (316L)	LA AE AF	4 mm (316)
			LB	1/6" (316)
			LC	6 mm (316)
			LD	1/4" (316)
			NB	6 mm (PA>Steel)
			NC	8 mm (PA>Steel)
			NE	1/4" (PA>Steel)
			NF	1/3" (PA>Steel)
Max. probe length	4 m (13 ft)		45 m (148 ft)	
Max. tensile loading capacity	30 kN			
For application	level measurement in bulk solids			

Input

Measured variable

The measured variable is the distance between the reference point and the product surface.

Subject to the empty distance entered "E" the level is calculated.

Alternatively, the level can be converted into other variables (volume, mass) by means of linearization (32 points).

Measuring range

The following table describes the media groups and the possible measuring range as a function of the media group.

Levelflex FMP56				
Media group	DC (ε_r)	Typical bulk solids	Measuring range	
			bare metallic rope probes	PA-coated rope probes
1	1.4...1.6	plastic powder	12 m (39 ft) [1]	–
2	1.6...1.9	▪ plastic granulate ▪ white lime, special cement ▪ sugar	12 m (39 ft)	12 m (39 ft)
3	1.9...2.5	portland cement, plaster	12 m (39 ft)	12 m (39 ft)
		flour	–	12 m (39 ft)
4	2.5...4	grain, seeds	–	12 m (39 ft)
		▪ ground stones ▪ sand	12 m (39 ft)	12 m (39 ft)
5	4...7	▪ naturally moist (ground) stones, ores ▪ salt	12 m (39 ft)	12 m (39 ft)

1) Restrictionss: for materials with a strong signal damping, e.g. ground material, wheat bran or silicic acid, the measuring range may be reduced.

Levelflex FMP57					
Media group	DC (ε_r)	Typical bulk solids	Measuring range		
			bare metallic rod probes	bare metallic rope probes	PA-coated rope probes
1	1.4...1.6	plastic powder	4 m (13 ft) [1]	20 to 25 m (66 to 82 ft) [1]	–
2	1.6...1.9	▪ plastic granulate ▪ white lime, special cement ▪ sugar	4 m (13 ft)	25 to 30 m (82 to 98 ft)	12.5 to 15 m (41 to 49 ft)
3	1.9...2.5	portland cement, plaster	4 m (13 ft)	30 to 45 m (98 to 148 ft)	–
		flour	4 m (13 ft)	–	15 to 25 m (49 to 82 ft)
4	2.5...4	grain, seeds	4 m (13 ft)	–	25 to 35 m (82 to 115 ft)
		▪ ground stones ▪ sand	4 m (13 ft)	45 m (148 ft)	25 to 35 m (82 to 115 ft)
5	4...7	▪ naturally moist (ground) stones, ores ▪ salt	4 m (13 ft)	45 m (148 ft)	35 to 36 m (115 to 118 ft)
6	> 7	▪ metallic powder ▪ carbon black ▪ coal	4 m (13 ft)	45 m (148 ft)	36 to 45 m (118 to 148 ft)

1) Restrictionss: for materials with a strong signal damping, e.g. ground material, wheat bran or silicic acid, the measuring range may be reduced.

- Reduction of the max. possible measuring range through buildup, above all of moist products.
- The respective lower group applies for very loose or loosened bulk solids.

Blocking distance

The upper blocking distance (= UB) is the minimum distance from the reference point of the measurement (mounting flange) to the maximum level.

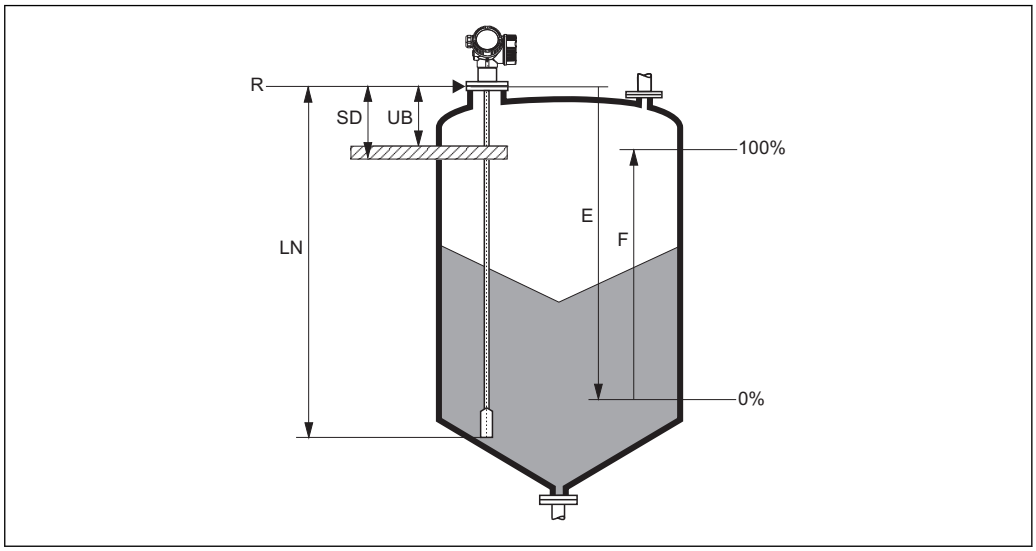

2 *Definition of blocking distance and safety distance*

R Reference point of measurement
LN Probe length
UB Upper blocking distance
E Empty calibration (= zero)
F Full calibration (= span)
SD Safety distance

Blocking distance (factory setting):
- with rod and rope probes up to 8 m (26 ft): 200 mm (8 in)
- with rod and rope probes exceeding a length of 8 m (26 ft): 0.025 * (length of probe)

The specified blocking distances are preset on delivery. Depending on the application these settings can be changed.

For rod and rope probes and for media with DC > 7 (or generally for stilling well/bypass applications) the blocking distance may be reduced to 100 mm (4").

Within the blocking distance, a reliable measurement can not be guaranteed.

A safety distance SD can be defined in addition to the blocking distance. A warning is generated if the level rises into this safety distance.

Measuring frequency spectrum

100 MHz to 1.5 GHz

Output

Output signal

HART

Signal coding	FSK ±0.5 mA over currency signal
Data transmission rate	1200 Baud
Galvanic isolation	Yes

PROFIBUS PA

Signal coding	Manchester Bus Powered (MBP)
Data transmission rate	31,25 KBit/s, voltage mode
Galvanic isolation	Yes

FOUNDATION Fieldbus

Signal coding	Manchester Bus Powered (MBP)
Data transmission rate	31,25 KBit/s, voltage mode
Galvanic isolation	Yes

Switch output

For HART devices, the switch output is available as an option. See product structure, feature 20: "Power Supply, Output", option B: "2-wire; 4-20mA HART, switch output"

Devices with PROFIBUS PA and FOUNDATION Fieldbus always have a switch output.

Switch output	
Function	Open collector switching output
Switching behavior	Binary (conductive or non-conductive), switches when the programmable switch point is reached
Failure mode	non-conductive
Eectrical connection values	U = 10.4 to 35 V_{DC}, I = 0 to 40 mA
Internal resistance	R_I < 880 Ω The voltage drop at this internal resistance has to be taken into account on planning the configuration. For example, the resulting voltage at a connected relay must be sufficient to switch the relay.
Insulation voltage	floating, Insulation voltage 1350 V_{DC} to power supply aund 500 V_{AC} to ground
Switch point	freely programmable, separately for switch-on and switch-off point
Switching delay	freely programmable from 0 to 100 sec. , separately for switch-on and switch-off point
Number of switching cycles	corresponds to the measuring cycle
Signal source device variables	▪ Level linearized ▪ Distance ▪ Terminal voltage ▪ Electronic temperature ▪ Relative echo amplitude ▪ Diagnostic values, Advanced diagnostics
Number of switching cycles	unlimited

Signal on alarm

Depending on the interface, failure information is displayed as follows:
- Current output (for HART devices)
  - Failsafe mode selectable (in accordance with NAMUR Recommendation NE 43):
    Minimum alarm: 3.6 mA
    Maximum alarm (= factory setting): 22 mA
  - Failsafe mode with user-selectable value: 3.59 to 22.5 mA
- Local display
  - Status signal (in accordance with NAMUR Recommendation NE 107)
  - Plain text display
- Operating tool via digital communication (HART, PROFIBUS PA, FOUNDATION Fieldbus) or service interface (CDI)
  - Status signal (in accordance with NAMUR Recommendation NE 107)
  - Plain text display

Linearization

The linearization function of the device allows the conversion of the measured value into any unit of length or volume. Linearization tables for calculating the volume in cylindrical tanks are pre-programmed. Other tables of up to 32 value pairs can be entered manually or semi-automatically.

Galvanic isolation

All circuits for the outputs are galvanically isolated from each other.

Protocol-specific data

HART

Manufacturer ID	17 (0x11)
Device type ID	0x34
HART specification	6.0
Device description files (DTM, DD)	Information and files under: ▪ www.endress.com ▪ www.hartcomm.org
HART load	Min. 250 Ω
HART device variables	The measured values can be freely assigned to the device variables. **Measured values for PV (primary variable)** ▪ Level linearized ▪ Distance ▪ Electronic temperature ▪ Relative echo amplitude **Measured values for SV, TV, FV (second, third and fourth variable)** ▪ Level linearized ▪ Distance ▪ Terminal voltage ▪ Electronic temperature ▪ Absolute echo amplitude ▪ Relative echo amplitude ▪ Calculated DC
Supported functions	▪ Burst mode ▪ Additional transmitter status

Wireless HART data

Minimum start-up voltage	11.4 V
Start-up current	3.6 mA
Start-up time	15 s
Minimum operating voltage	11.4 V
Multidrop current	3.6 mA
Set-up time	1 s

PROFIBUS PA

Manufacturer ID	17 (0x11)
Ident number	0x1558
Profile version	3.02
GSD file GSD file version	Information and files under: ▪ www.endress.com ▪ www.profibus.org
Output values	**Analog Input:** ▪ Level linearized ▪ Distance ▪ Terminal voltage ▪ Electronic temperature ▪ Absolute echo amplitude ▪ Relative echo amplitude ▪ Calculated DC **Digital Input:** ▪ Extended diagnostic blocks ▪ Status output PFS Block
Input values	**Analog Output:** ▪ Analog value from PLC (for sensor block external pressure and temperature) ▪ Analog value from PLC to be indicated on the display **Digital Output:** ▪ Extended diagnostic block ▪ Level limiter ▪ Sensor block measurement on ▪ Sensor block save history on ▪ Status output
Supported functions	▪ Identification & Maintenance Simple device identification via control system and nameplate ▪ Automatic Ident Number Adoption GSD compatibility mode with respect to the previous device Levelflex M FMP4x ▪ Physical Layer Diagnostics Installation check of the PROFIBUS segment and the Levfelflex FMP4x via terminal voltage and telegram monitoring ▪ PROFIBUS Up-/Download Up to 10 times faster reading and writing of parameters via PROFIBUS Up-/Download ▪ Condensed Status Simple and self-explanatory diagnostic information due to categorization of diagnostic messages

FOUNDATION Fieldbus

Manufacturer ID	452B48 hex
Device type	1022 hex
Device Revision	02 hex
DD Revision CFF Revision	Information and files can be found: ▪ www.endress.com ▪ www.fieldbus.org
Device Tester Version (ITK Version)	6.01
ITK Test Campaign Number	IT080500
Link Master (LAS) capable	yes
Link Master / Basic Device selectable	yes; default: Basic Device
Node address	Default: 247 (0xF7)
Features supported	Following methods are supported: ▪ Restart ▪ ENP Restart ▪ Setup ▪ Linearization ▪ Self Check
Virtual Communication Relationships (VCRs)	
Number of VCRs	44
Number of Link Objects in VFD	50
Permanent entries	1
Client VCRs	0
Server VCRs	10
Source VCRs	43
Sink VCRs	0
Subscriber VCRs	43
Publisher VCRs	43
Device Link Capabilities	
Slot time	4
Min. inter PDU delay	8
Max. response delay	5

Transducer Blocks

Block	Content	Output values
Setup Transducer Block	Contains all parameters for a standard commissioning procedure	▪ Level or volume [1] (Channel 1) ▪ Distance (Channel 2)
Advanced Setup Transducer Block	Contains all parameters for a more detailed configuration of the device	no output values
Display Transducer Block	Contains all parameters for the configuration of the display module	no output values
Diagnostic Transducer Block	Contains diagnostic information	no output values
Expert Configuration Transducer Block	Contains parameters which require detailed knowledge of the functionalities of the device	no output values
Expert Information Transducer Block	Contains information about the state of the device	no output values
Service Sensor Transducer Block	Contains parameters which can only be operated by Endress+Hauser service personnel	no output values
Service Information Transducer Block	Contains information on the state of device which is relevant for service operations	no output values
Data Transfer Transducer Block	Contains parameters which allow to backup the device configuration in the display module and to restore it into the device.	no output values

1) depending on the configuration of the block

Function Blocks

Block	Content	Number of permanent blocks	Number of instantiable blocks	Execution time	Functionality
Resource Block	The Resource Block contains all the data that uniquely identify the field device. It is an electronic version of a nameplate of the device.	1	0	-	enhanced
Analog Input Block	The AI block takes the manufacturer's input data, selected by channel number, and makes it available to other function blocks at its output.	2	3	25 ms	enhanced
Discrete Input Block	The DI block takes a discrete input value (e.g. indication of an level limit), and makes it available to other function blocks at its output.	1	2	20 ms	standard
PID Block	The PID block serves as proportional-integral-derivative controller and is used almost universally to do closed-loop-control in the field including cascade and feedforward.	1	1	25 ms	standard
Arithmetic Block	This block is designed to permit simple use of popular measurement math functions. The user does not have to know how to write equations. The math algorithm is selected by name, chosen by the user for the function to be done.	1	1	25 ms	standard
Signal Characterizer Block	The signal characterizer block has two sections, each with an output that is a non-linear function of the respective input. The non-linear function is determined by a single look-up table with 21 arbitrary x-y pairs.	1	1	25 ms	standard
Input Selector Block	The input selector block provides selection of up to four inputs and generates an output based on the configured action. This block normally receives its inputs from AI blocks. The block performs maximum, minimum, middle, average and 'first good' signal selection.	1	1	25 ms	standard
Integrator Block	The Integrator Function Block integrates a variable as a function of the time or accumulates the counts from a Pulse Input block. The block may be used as a totalizer that counts up until reset or as a batch totalizer that has a setpoint, where the integrated or accumulated value is compared to pre-trip and trip settings, generating discrete signals when these settings are reached.	1	1	25 ms	standard
Analog Alarm Block		1	1	25 ms	standard

Up to 20 blocks can be instantiated in the device altogether, including the blocks already instantiated on delivery.

Power supply

Terminal assignment **2-wire: 4-20mA HART**

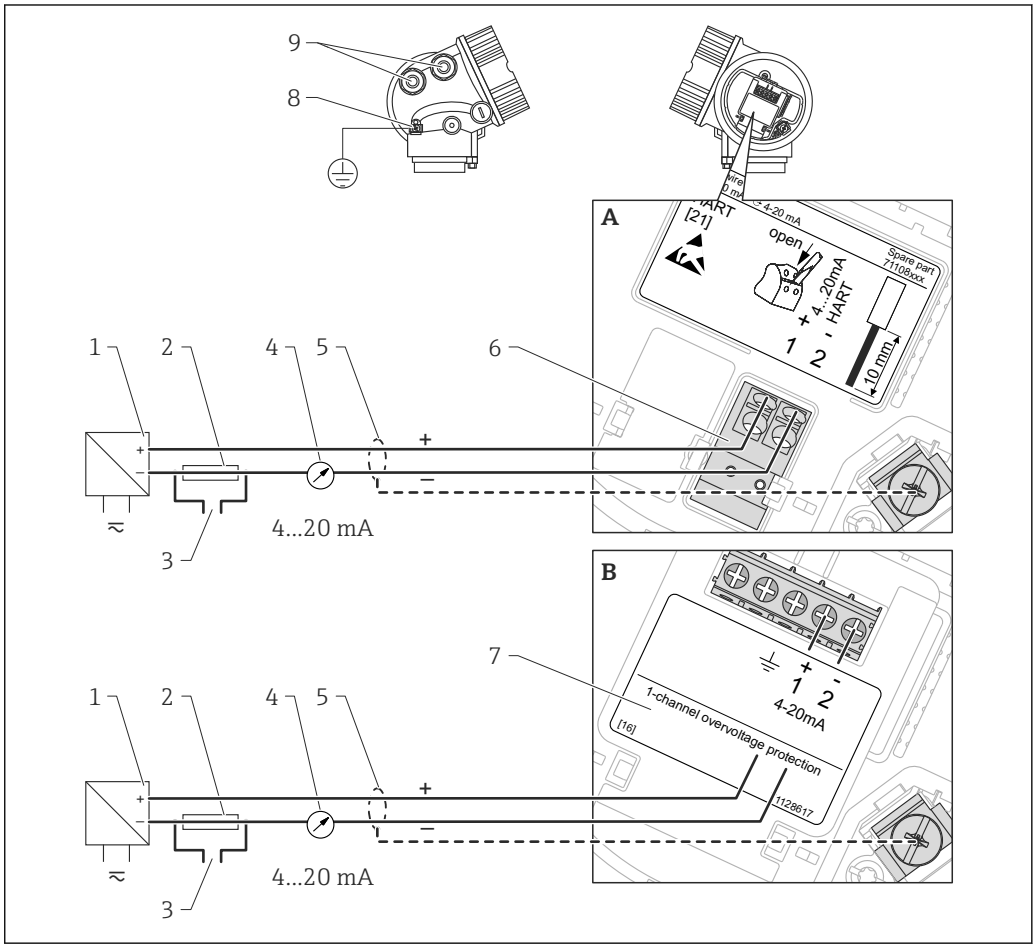

3 Terminal assignment 2-wire; 4-20mA HART

A Without integrated overvoltage protection
B With integrated overvoltage protection
1 Active barrier with power supply (e.g. RN221N): Observe terminal voltage
2 HART communication resistor (≥250 Ω): Observe maximum load
3 Connection for Commubox FXA195 or FieldXpert SFX350/SFX370 (via VIATOR Bluetooth modem)
4 Analog display device: Observe maximum load
5 Cable screen; observe cable specification
6 4-20mA HART (passive): Terminals 1 and 2
7 Overvoltage protection module
8 Terminal for potential equalization line
9 Cable entry

2-wire: 4-20mA HART, switch output

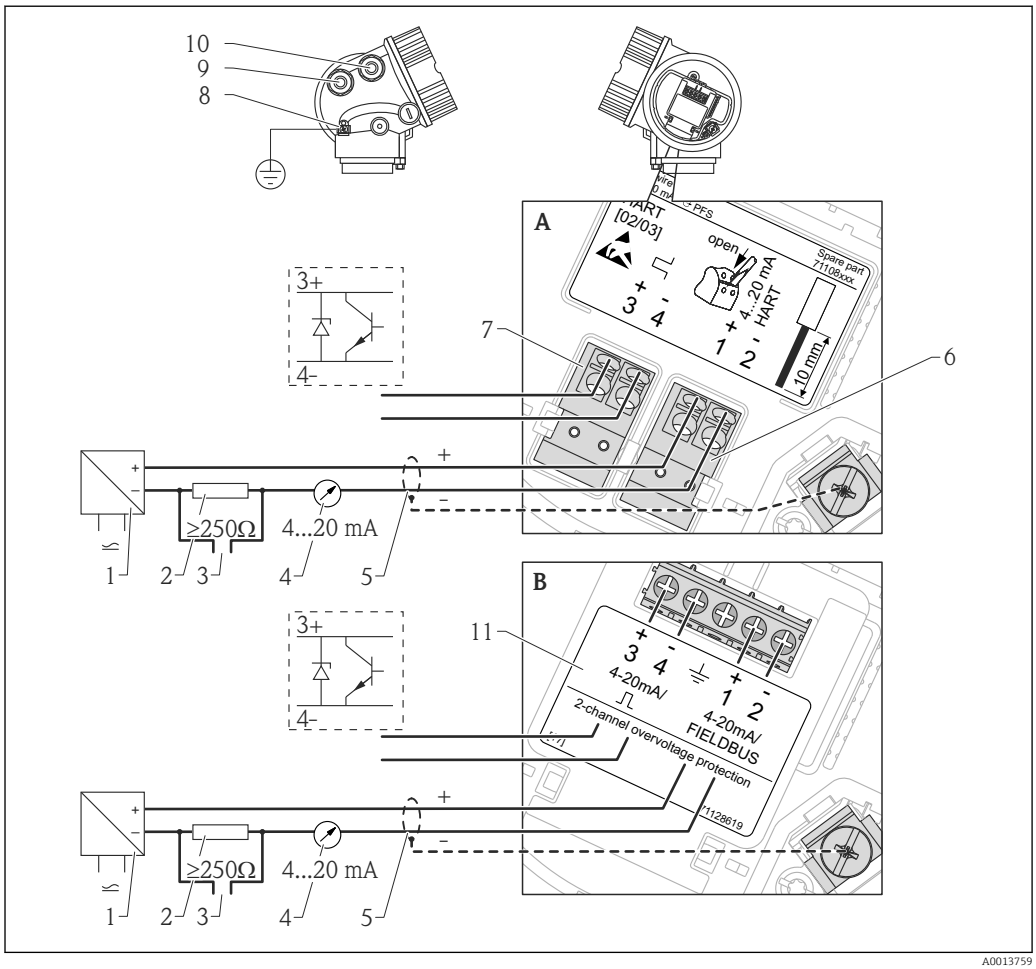

4 *Terminal assignment 2-wire; 4-20mA HART, switch output*

A Without integrated overvoltage protection
B With integrated overvoltage protection
1 Active barrier with power supply (e.g. RN221N): Observe terminal voltage
2 HART communication resistor (≥250 Ω): Observe maximum load
3 Connection for Commubox FXA195 or FieldXpert SFX350/SFX370 (via VIATOR Bluetooth modem)
4 Analog display device: Observe maximum load
5 Cable screen; observe cable specification
6 4-20mA HART (passive): Terminals 1 and 2
7 Switch output (open collector): Terminals 3 and 4
8 Terminal for potential equalization line
9 Cable entry for 4-20mA HART line
10 Cable entry for switch output line
11 Overvoltage protection module

2-wire: 4-20mA HART, 4-20mA

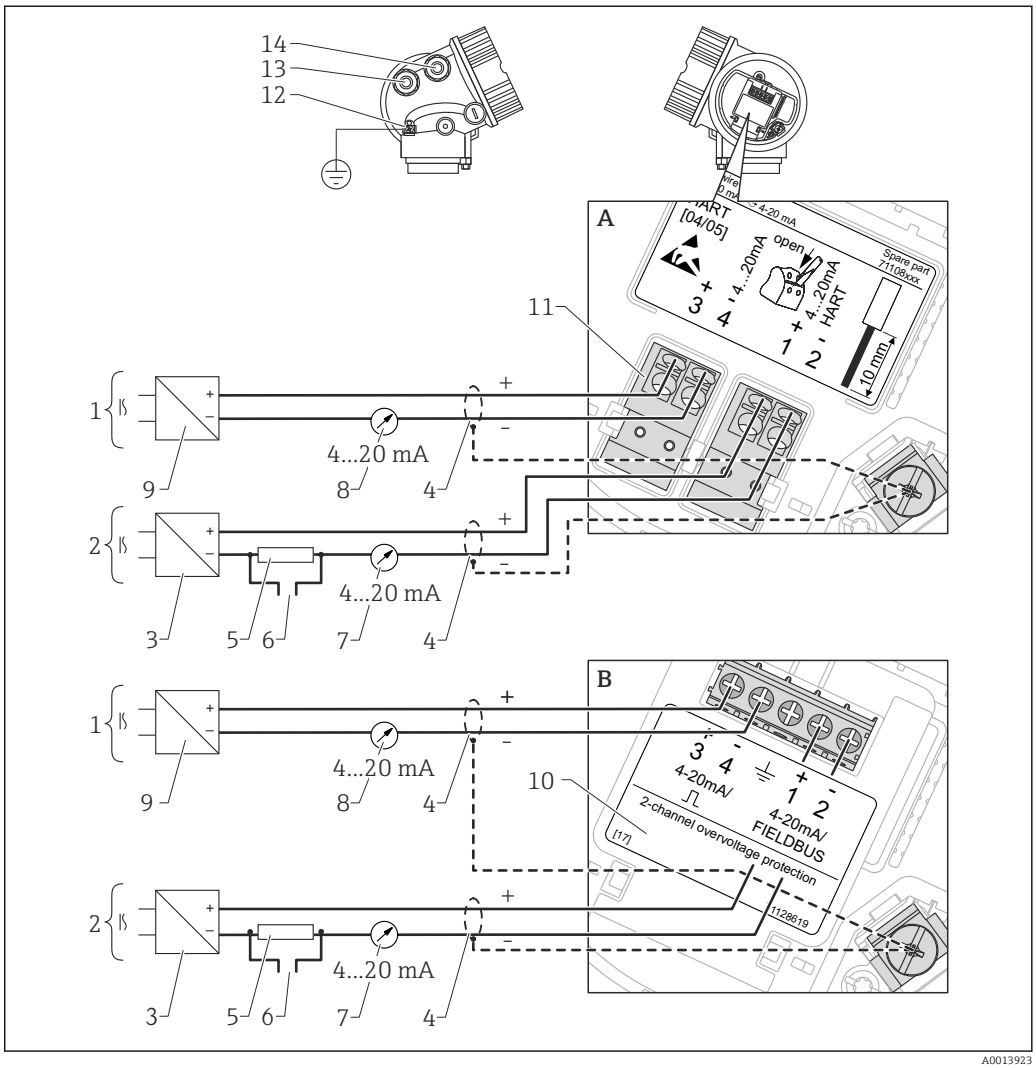

5 *Terminal assignment 2-wire, 4-20 mA HART, 4...20mA*

A Without integrated overvoltage protection
B With integrated overvoltage protection
1 Connection current output 2
2 Connection current output 1
3 Supply voltage for current output 1 (e.g. RN221N); Observe terminal voltage
4 Cable screen; observe cable specification
5 HART communication resistor (≥ 250 Ω): Observe maximum load
6 Connection for Commubox FXA195 or FieldXpert SFX350/SFX370 (via VIATOR Bluetooth modem)
7 Analog display device ; observe maximum load
8 Analog display device ; observe maximum load
9 Supply voltage for current output 2 (e.g. RN221N); Obesrve terminal voltage
10 Overvoltage protection module
11 Current output 2: Terminals 3 and 4
12 Terminal for the potential equalization line
13 Cable entry for current output 1
14 Cable entry for current output 2

This version is also suited for single-channel operation. In this case, current output 1 (terminals 1 and 2) must be used.

4-wire: 4-20mA HART (10.4 to 48 V_{DC})

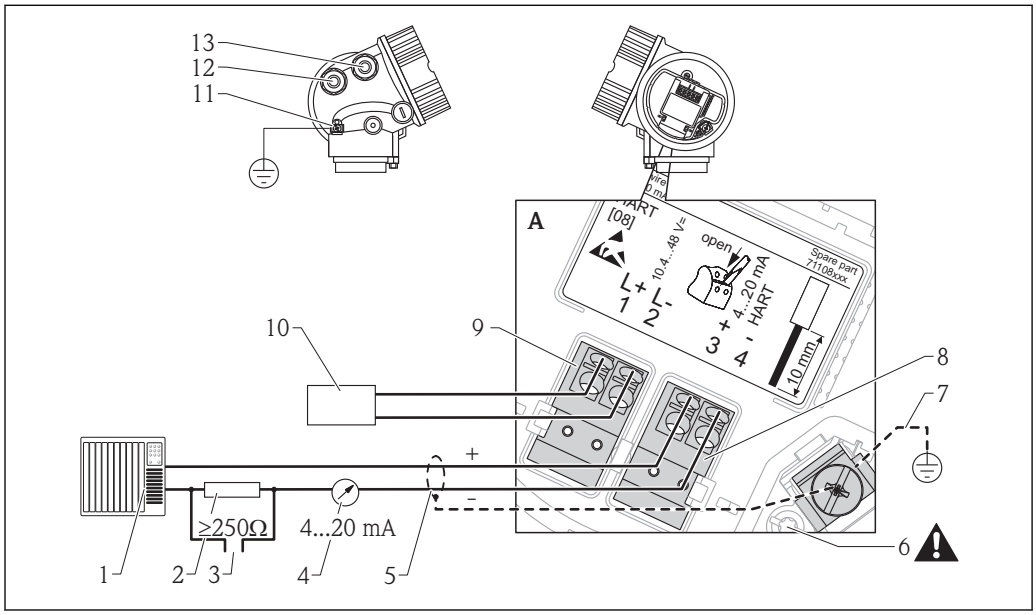

6 *Terminal assignment 4-wire; 4-20mA HART (10.4 to 48 VDC)*

1 *Evaluation unit, e.g. PLC*
2 *HART communication resistor (≥250 Ω): Observe maximum load*
3 *Connection for Commubox FXA195 or FieldXpert SFX350/SFX370 (via VIATOR Bluetooth modem)*
4 *Analog display device: Observe maximum load*
5 *Signal cable including screening (if required), observe cable specification*
6 *Protective connection; do not disconnect!*
7 *Protective earth, observe cable specification*
8 *4...20mA HART (active): Terminals 3 and 4*
9 *Supply voltage: Terminals 1 and 2*
10 *Supply voltage: Observe terminal voltage, observe cable specification*
11 *Terminal for potential equalization*
12 *Cable entry for signal line*
13 *Cable entry for power supply*

⚠ CAUTION

To ensure electrical safety:

- ▶ Do not disconnect the protective connection (6).
- ▶ Disconnect the supply voltage before disconnecting the protective earth (7).

Connect protective earth to the internal ground terminal (7) before connecting the supply voltage. If necessary, connect the potential matching line to the external ground terminal (11).

In order to ensure electromagnetic compatibility (EMC): Do not only ground the device via the protective earth conductor of the supply cable. Instead, the functional grounding must also be connected to the process connection (flange or threaded connection) or to the external ground terminal.

An easily accessible power switch must be installed in the proximity of the device. The power switch must be marked as a disconnector for the device (IEC/EN61010).

4-wire: 4-20mA HART (90 to 253 V_{AC})

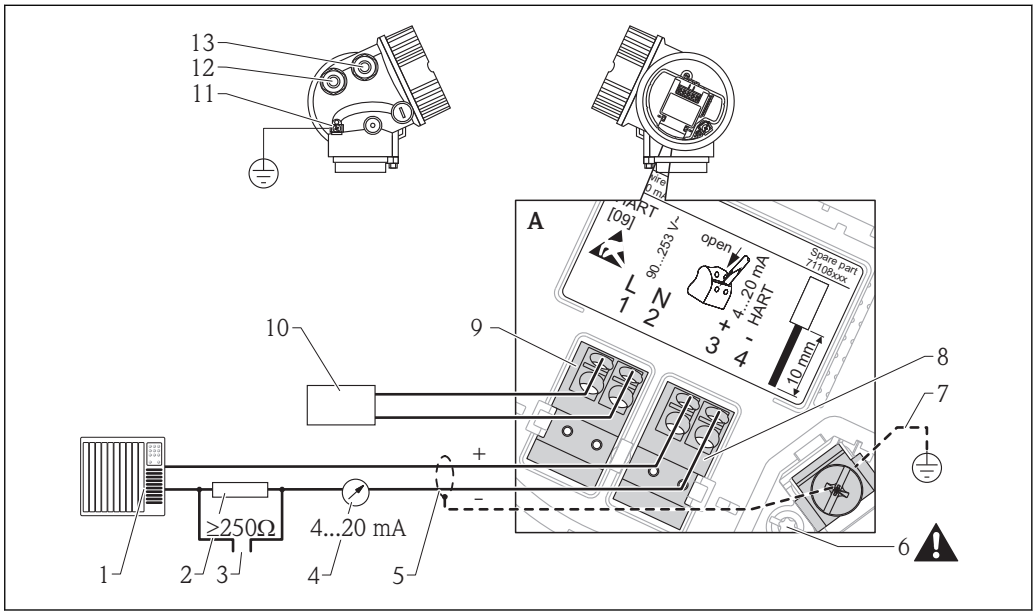

7 *Terminal assignment 4-wire; 4-20mA HART (90 to 253 VAC)*

1 *Evaluation unit, e.g. PLC*
2 *HART communication resistor (≥250 Ω): Observe maximum load*
3 *Connection for Commubox FXA195 or FieldXpert SFX350/SFX370 (via VIATOR Bluetooth modem)*
4 *Analog display device: Observe maximum load*
5 *Signal cable including screening (if required), observe cable specification*
6 *Protective connection; do not disconnect!*
7 *Protective earth, observe cable specification*
8 *4...20mA HART (active): Terminals 3 and 4*
9 *Supply voltage: Terminals 1 and 2*
10 *Supply voltage: Observe terminal voltage, observe cable specification*
11 *Terminal for potential equalization*
12 *Cable entry for signal line*
13 *Cable entry for power supply*

⚠ CAUTION

To ensure electrical safety:

- ▶ Do not disconnect the protective connection (6).
- ▶ Disconnect the supply voltage before disconnecting the protective earth (7).

Connect protective earth to the internal ground terminal (7) before connecting the supply voltage. If necessary, connect the potential matching line to the external ground terminal (11).

In order to ensure electromagnetic compatibility (EMC): Do not only ground the device via the protective earth conductor of the supply cable. Instead, the functional grounding must also be connected to the process connection (flange or threaded connection) or to the external ground terminal.

An easily accessible power switch must be installed in the proximity of the device. The power switch must be marked as a disconnector for the device (IEC/EN61010).

PROFIBUS PA / FOUNDATION Fieldbus

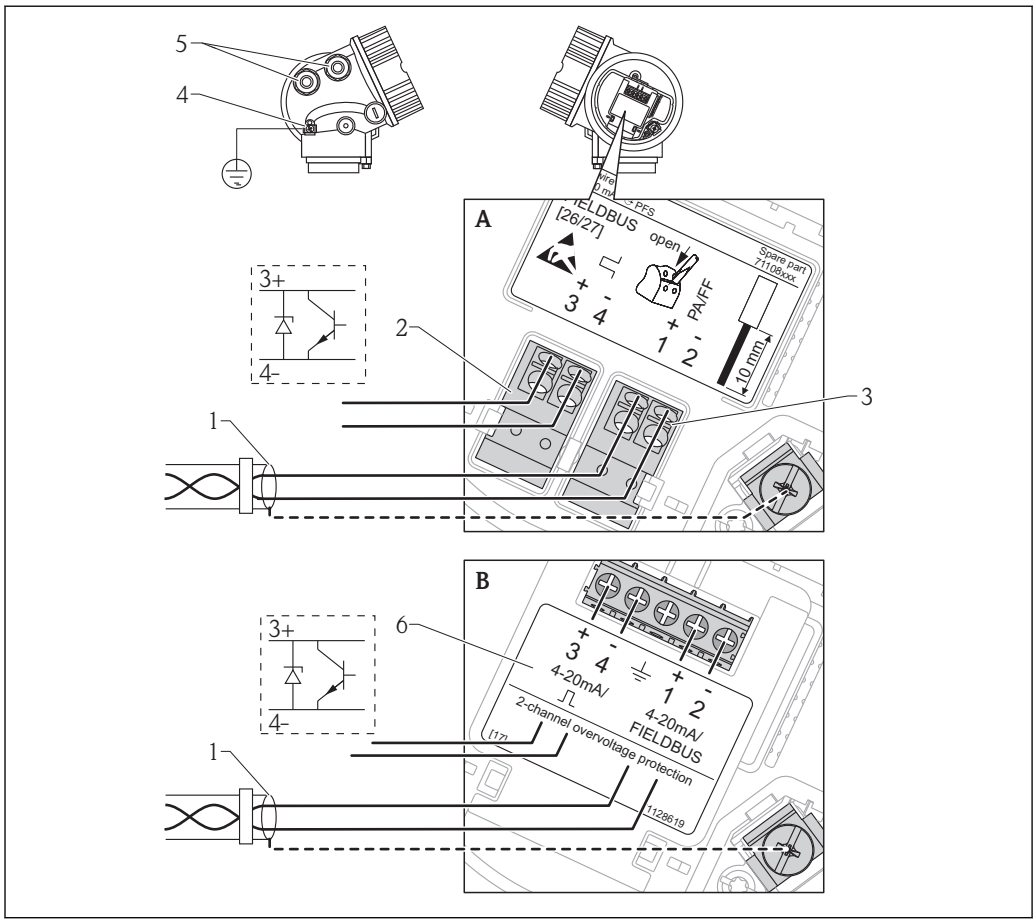

8 Terminal assignment PROFIBUS PA / FOUNDATION Fieldbus

A Without integrated overvoltage protection
B With integrated overvoltage protection
1 Cable screen: Observe cable specifications
2 Switch output (open collector): Terminals 3 and 4
3 PROFIBUS PA / FOUNDATION Fieldbus: Terminals 1 and 2
4 Terminal for potential equalization line
5 Cable entries
6 Overvoltage protection module

Connection examples for the switch output

For HART devices, the switch output is available as an option. See product structure, feature 20: "Power Supply, Output", option B: "2-wire; 4-20mA HART, switch output"

Devices with PROFIBUS PA and FOUNDATION Fieldbus always have a switch output.

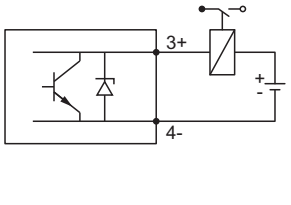

A0015909

9 Connection of a relay

Suitable relays (examples):
- Solid-state relay: Phoenix Contact OV-24DC/480AC/5 with mounting rail connector UMK-1 OM-R/AMS
- Electromechanical relay: Phoenix Contact PLC-RSC-12DC/21

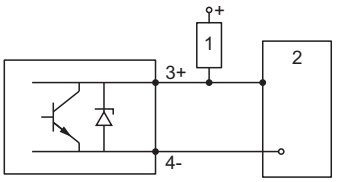

A0015910

10 Connection of a digital input

1 Pull-up resistor
2 Digital input

For optimum interference immunity we recommend to connect an external resistor (internal resistance of the relay or Pull-up resistor) of < 1 000 Ω.

Device plug connectors

For the versions with fieldbus plug connector (M12 or 7/8"), the signal line can be connected without opening the housing.

Pin assignment of the M12 plug connector

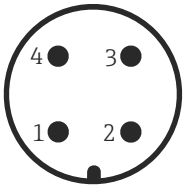

A0011175

Pin	Meaning
1	Signal +
2	not connected
3	Signal -
4	Ground

Pin assignment of the 7/8" plug connector

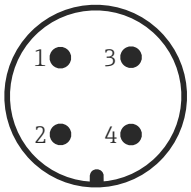

A0011176

Pin	Meaning
1	Signal -
2	Signal +
3	Not connected
4	Screen

Power supply

An external power supply is required.

Various supply units can be ordered from Endress+Hauser: see "Accessories" section (→ 95)

2-wire, 4-20mA HART, passive

"Power Supply, Output" [1]	"Approval" [2]	Terminal voltage U at the device	Maximum load R, depending on the supply voltage U_0 at the supply unit
A: 2-wire; 4-20mA HART	▪ Non-Ex ▪ Ex nA ▪ CSA GP	11.5 to 35 V [3]	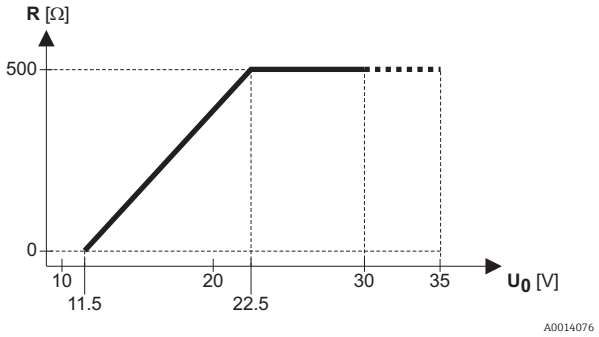
	Ex ic	11.5 to 32 V [3]	
	Ex ia / IS	11.5 to 30 V [3]	
	▪ Ex d / XP ▪ Ex ic(ia) ▪ Ex tD / DIP	13.5 to 30 V [4]	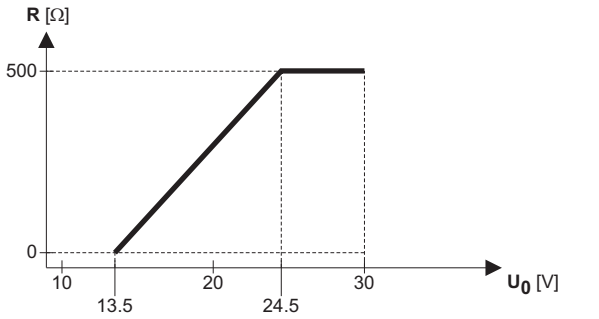

1) Feature 020 of the product structure
2) Feature 010 of the product structure
3) For ambient temperatures $T_a \leq$ -30 °C (-22 °F) a minimum voltage of 14 V is required for the sartup of the device at the MIN error current (3,6 mA). The startup current can be parametrized. If the device is operated with a fixed current I ≥ 4,5 mA (HART multidrop mode), a voltage of U ≥ 11,5 V is sufficient throughout the entire range of ambient temperatures.
4) For ambient temperatures $T_a \leq$ -20 °C (-4 °F) a minimum voltage of 16 V is required for the startup of the device at the MIN error current (3.6 mA).

"Power Supply, Output" [1]	"Approval" [2]	Terminal voltage U at the device	Maximum load R, depending on the supply voltage U_0 at the supply unit
B: 2-wire; 4-20 mA HART, switch output	▪ Non-Ex ▪ Ex nA ▪ Ex nA(ia) ▪ Ex ic ▪ Ex ic(ia) ▪ Ex d(ia) / XP ▪ Ex ta / DIP ▪ CSA GP	12 to 35 V [3]	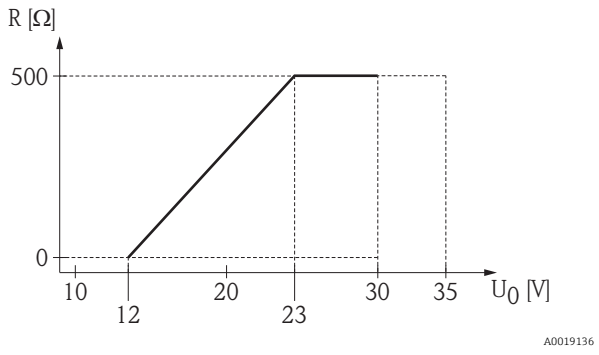
	▪ Ex ia / IS ▪ Ex ia + Ex d(ia) / IS + XP	12 to 30 V [3]	

1) Feature 020 of the product structure
2) Feature 010 of the product structure
3) For ambient temperatures $T_a \leq$ -30 °C (-22 °F) a minimum voltage of 14 V is required for the startup of the device at the MIN error current (3.6 mA).

"Power Supply, Output" [1]	"Approval" [2]	Terminal voltage U at the device	Maximum load R, depending on the supply voltage U_0 at the supply unit
C: 2-wire; 4-20mA HART, 4-20mA	alle	**Channel 1:** 13.5 to 30 V [3]	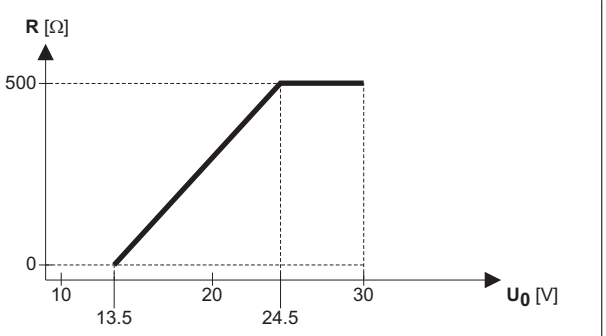
		Channel 2: 12 to 30 V	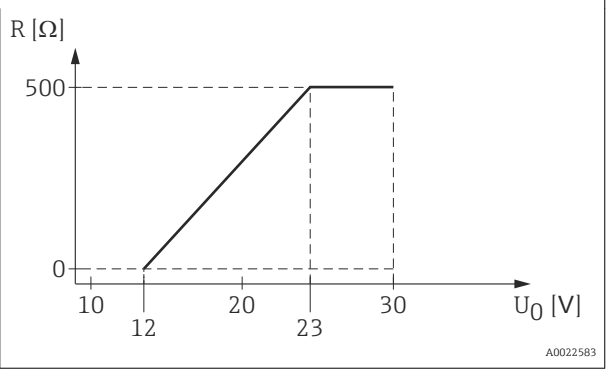

1) Feature 020 of the product structure
2) Feature 010 of the product structure
3) For ambient temperatures $T_a \leq$ -30 °C (-22 °F) a minimum voltage of 16 V is required for the startup of the device at the MIN error current (3.6 mA).

Polarity reversal protection	Yes
Admissible residual ripple at f = 0 to 100 Hz	U_{SS} < 1 V
Admissible residual ripple at f = 100 to 10000 Hz	U_{SS} < 10 mV

4-wire, 4-20mA HART, active

"Power supply; Output" [1]	Terminal voltage	Maximum load R_{max}
K: 4-wire 90-253VAC; 4-20mA HART	90 to 253 V_{AC} (50 to 60 Hz), overvoltage category II	500 Ω
L: 4-wire 10,4-48VDC; 4-20mA HART	10.4 to 48 V_{DC}	

1) Feature 020 of the product structure

PROFIBUS PA, FOUNDATION Fieldbus

"Power supply; Output" [1]	"Approval" [2]	Terminal voltage
E: 2-wire; FOUNDATION Fieldbus, switch output **G:** 2-wire; PROFIBUS PA, switch output	▪ Non-Ex ▪ Ex nA ▪ Ex nA(ia) ▪ Ex ic ▪ Ex ic(ia) ▪ Ex d(ia) / XP ▪ Ex ta / DIP ▪ CSA GP	9 to 32 V [3]
	▪ Ex ia / IS ▪ Ex ia + Ex d(ia) / IS + XP	9 to 30 V

1) Feature 020 of the product structure
2) Feature 010 of the product structure
3) Input voltages up to 35 V will not spoil the device.

Polarity sensitive	No
FISCO/FNICO compliant according to IEC 60079-27	Yes

Power consumption

"Power supply; Output" [1]	Power consumption
A: 2-wire; 4-20mA HART	< 0.9 W
B: 2-wire; 4-20mA HART, switch output	< 0.9 W
C: 2-wire; 4-20mA HART, 4-20mA	< 2 x 0.7 W
K: 4-wire 90-253VAC; 4-20mA HART	6 VA
L: 4-wire 10,4-48VDC; 4-20mA HART	1.3 W

1) Feature 020 of the product structure

Current consumption

HART

Nominal current	3.6 to 22 mA, the start-up current for multidrop mode can be parametrized (is set to 3.6 mA on delivery)
Breakdown signal (NAMUR NE43)	adjustable: 3.59 to 22.5 mA

PROFIBUS PA

Nominal current	14 mA
Error current FDE (Fault Disconnection Electronic)	0 mA

FOUNDATION Fieldbus

Device basic current	15 mA
Error current FDE (Fault Disconnection Electronic)	0 mA

FISCO

U_i	17.5 V
I_i	550 mA
P_i	5.5 W
C_i	5 nF
L_i	10 µH

Power supply failure

- Configuration is retained in the HistoROM (EEPROM).
- Error messages (incl. value of operated hours counter) are stored.

Potential equalization

No special measures for potential equalization are required.

If the device is designed for hazardous areas, observe the information in the documentation "Safety Instructions" (XA, ZD).

Terminals

- **Without integrated overvoltage protection**
  Plug-in spring terminals for wire cross-sections 0.5 to 2.5 mm² (20 to 14 AWG)
- **With integrated overvoltage protection**
  Screw terminals for wire cross-sections 0.2 to 2.5 mm² (24 to 14 AWG)

Cable entries

Connection of power supply and signal line

To be selected in feature 050 "Electrical connection"

- Gland M20; Material dependent on the approval:
  - For Non-Ex, ATEX, IECEx, NEPSI Ex ia/ic:
    Plastics M20x1.5 for cable Φ5 to 10 mm (0.2 to 0.39 in)
  - For Dust-Ex, FM IS, CSA IS, CSA GP, Ex nA:
    Metal M20x1.5 for cable Φ7 to 10 mm (0.28 to 0.39 in) [2)]
  - For Ex d:
    No gland available
- Thread
  - ½" NPT
  - G ½"
  - M20 × 1.5
- Plug M12 / Plug 7/8"
  Only available for Non-Ex, Ex ic, Ex ia

Connection of remote display FHX50

Dependent on feature 030: "Display, Operation":

- "Prepared for display FHX50 + M12 connection":
  M12 socket
- "Prepared for display FHX50 + custom connection":
  Thread M16

2) The material of the gland is dependent on the housing type; GT18 (stainless steel housing): 316L (1.4404); GT19 (plastic housing) and GT20 (aluminum housing): nickel-coated brass (CuZn).

Cable specification

- Minimum cross-section: dependent on terminals (→ 🖹 32)
- For ambient temperature $T_U \geq 60$ °C (140 °F): use cable for temperature T_U +20 K.

HART

- A normal device cable suffices if only the analog signal is used.
- A shielded cable is recommended if using the HART protocol. Observe grounding concept of the plant.
- For 4-wire devices: Standard device cable is sufficient for the power line.

PROFIBUS

Use a twisted, screened two-wire cable, preferably cable type A.

For further information on the cable specifications, see Operating Instructions BA00034S "Guidelines for planning and commissioning PROFIBUS DP/PA", PNO Guideline 2.092 "PROFIBUS PA User and Installation Guideline" and IEC61158-2 (MBP).

FOUNDATION Fieldbus

Endress+Hauser recommends using twisted, shielded two-wire cables.

For further information on the cable specifications, see Operating Instructions BA00013S "FOUNDATION Fieldbus Overview", FOUNDATION Fieldbus Guideline and IEC 61158-2 (MBP).

Overvoltage protection

If the measuring device is used for level measurement in flammable liquids which requires the use of overvoltage protection according to DIN EN 60079-14, standard for test procedures 60060-1 (10 kA, pulse 8/20 µs), overvoltage protection has to be ensured by an integrated or external overvoltage protection module.

Integrated overvoltage protection

An integrated overvoltage protection module is available for 2-wire HART as well as PROFIBUS PA and FOUNDATION Fieldbus devices.

Product structure: Feature 610 "Accessory mounted", option NA "Overvoltage protection".

Technical data	
Resistance per channel	2 * 0.5 Ω max
Threshold DC voltage	400 to 700 V
Threshold impulse voltage	< 800 V
Capacitance at 1 MHz	< 1.5 pF
Nominal arrest impulse voltage (8/20 µs)	10 kA

External overvoltage protection

HAW562 or HAW569 from Endress+Hauser are suited as external overvoltage protection.

For detailed information please refer to the following documents:
- HAW562: TI01012K
- HAW569: TI01013K

Performance characteristics

Reference operating conditions

- Temperature = +24 °C (+75 °F)±5 °C (±9 °F)
- Pressure = 960 mbar abs. (14 psia)±100 mbar (±1.45 psi)
- Humidity = 60 %±15 %
- Reflection factor ≥ 0,8 (metal plate for rod and rope probe with min. 1 m (40 in) diameter)
- Flange for rod or rope probe ≥300 mm (12 in) diameter
- Distance to obstacles ≥1 m (40 in)

Maximum measured error

Typical data under reference operating conditions: DIN EN 61298-2, percentage values in relation to the span.

Output:	digital	analog [1]
Sum of non-linearity, nonrepeatability and hysteresis	▪ Measuring distance up to 15 m (49 ft): ±2 mm (0.08 in) ▪ Measuring distance >15 m (49 ft): ±10 mm (0.39 in)	±0.02 %
Offset / Zero	±4 mm (0.16 in)	±0.03 %

1) Add error of the analogous value to the digital value.

If the reference conditions are not met, the offset/zero point arising from the mounting situation may be up to ±12 mm (0.47 in) for rope and rod probes. This additional offset/zero point can be compensated for by entering a correction (parameter "level correction") during commissioning.

Differing from this, the following measuring error is present in the vicinity of the lower probe end:

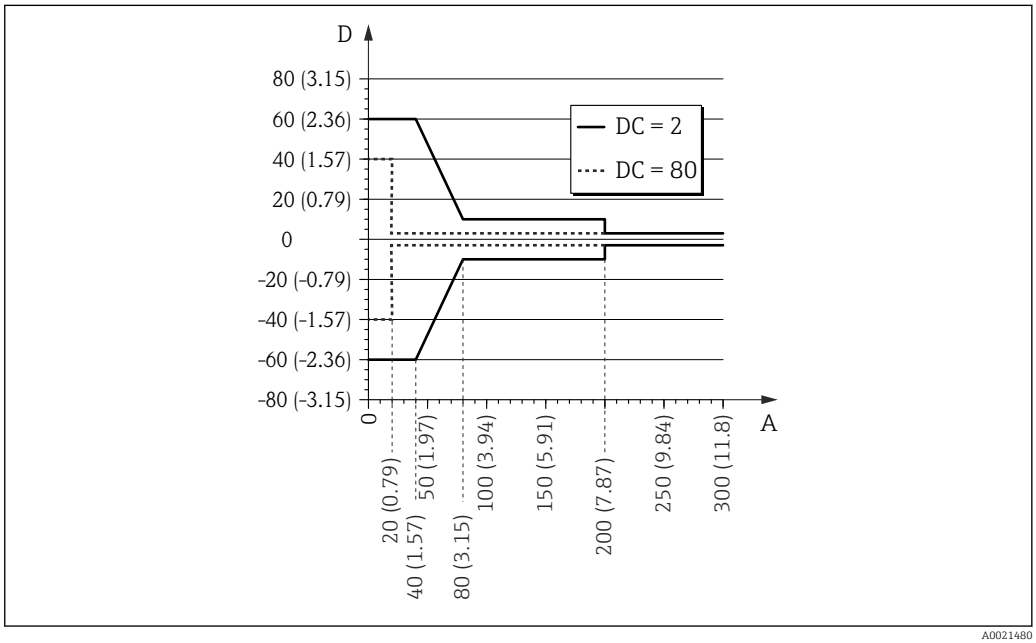

11 Measuring error at the end-of-probe for rod and coax probes

A Distance from probe end [mm(in)]
D Measuring error: Sum of non-linearity, non-repeatability and hysteresis

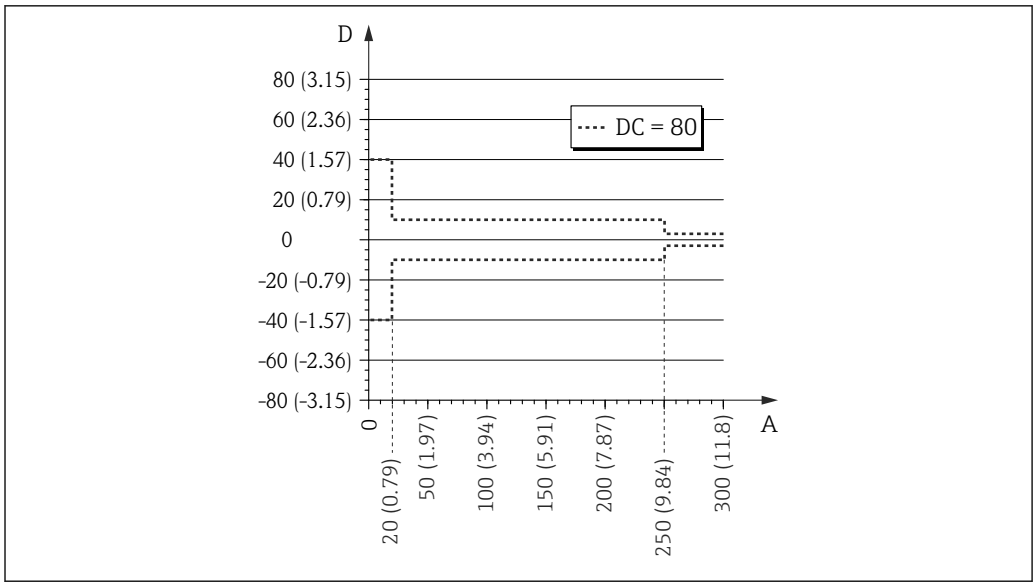

12 *Measuring error at the end-of-probe for rope probes*

A Distance from probe end
D Measuring error: Sum of non-linearity, non-repeatability and hysteresis

If for rope probes the DC value is less than 7, then measurement is not possible in the area of the straining weight (0 to 250 mm from end of probe; lower blocking distance).

In the area of the upper probe end, the measuring error is as follows (rod/rope only):

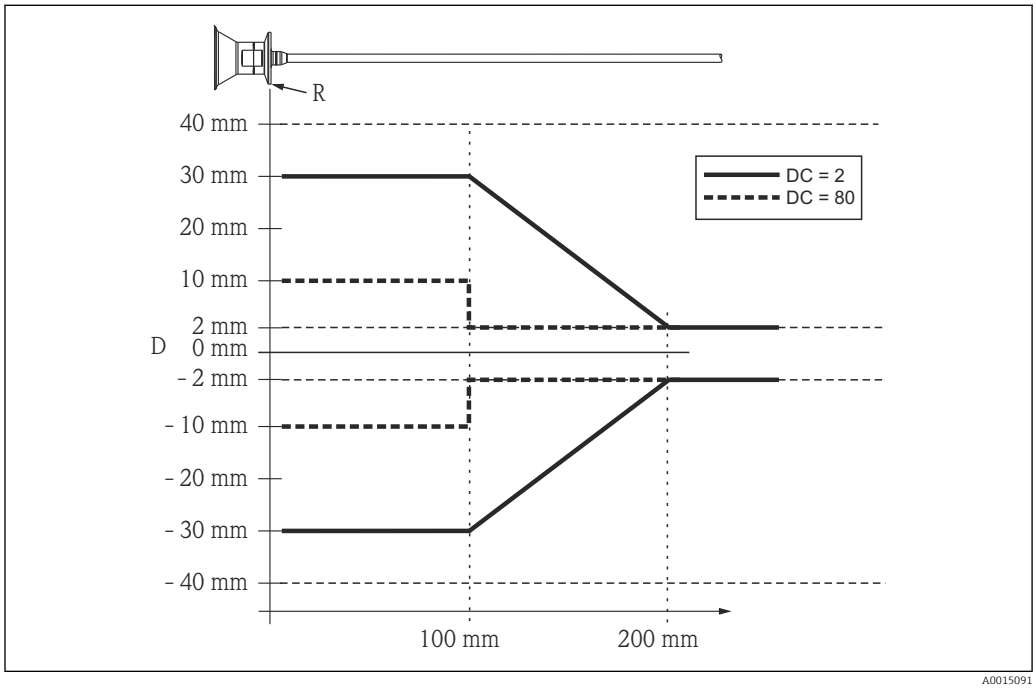

13 *Measuring error at the upper end of the probe*

D Sum of non-linearity, non-repeatability and hysteresis
R Reference point of measurement
DC Dielectric constant

Resolution

- digital: 1 mm
- analog: 1 µA

Reaction time

The reaction time can be parametrized. The following step response times (as per DIN EN 61298-2) [3] are valid if the damping is switched off:

Level measurement		
Probe length	**Sampling rate**	**Step response time**
<10 m (33 ft)	3.6 measurements/second	< 0.8 s
< 40 m (131 ft)	≥ 2.7 measurements/second	< 1 s

Influence of ambient temperature

The measurements are carried out in accordance with EN 61298-3

- digital (HART, PROFIBUS PA, FOUNDATION Fieldbus): average T_K = 0.6 mm/10 K
  For devices with remote sensor [4] there is an additional offset of ±0.3 mm/10K (±0.01 in/10K) per 1 m (3.3 ft) of the remote cable.
- analog (current output):
  - zero point (4 mA): average T_K = 0.02 %/10 K
  - span (20 mA): average T_K = 0.05 %/10 K

3) According to DIN EN 61209-2 the response time is the time which passes after a sudden change of the input signal until the output signal for the first time assumes 90% of the steady-state value.
4) Product structure: Feature 600, options MB, MC or MD)

Mounting

Mounting requirements

Suitable mounting position

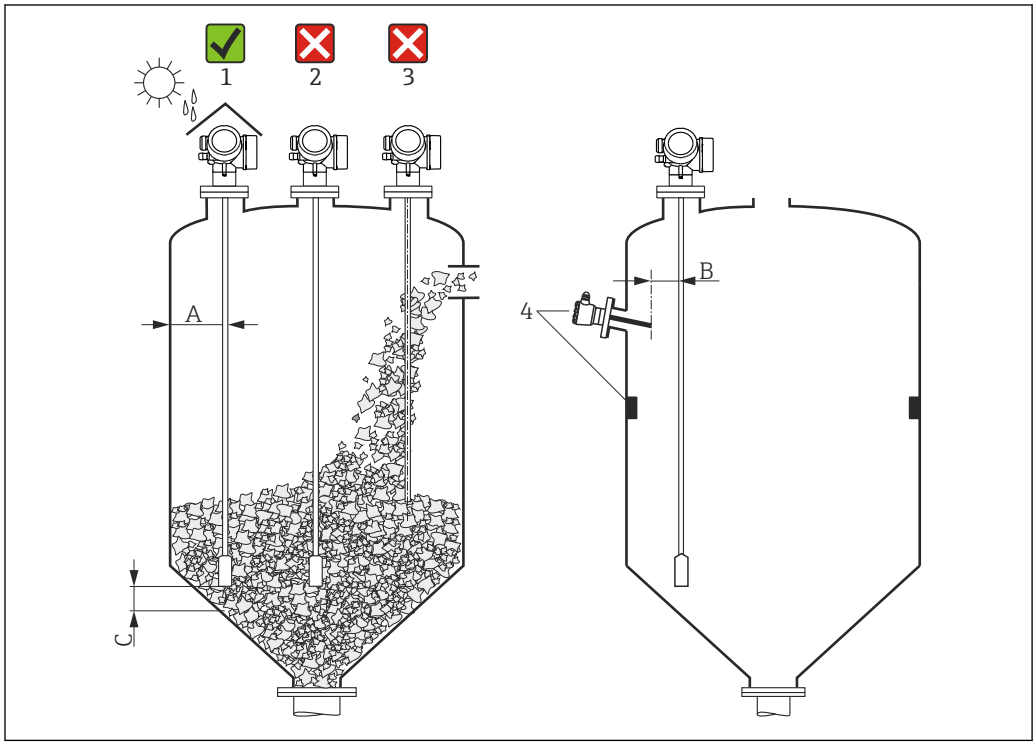

14 *Mounting requirements for Levelflex*

Mounting distances

- Distance (A) between wall and rod or rope probe:
  - for smooth metallic walls: > 50 mm (2")
  - for plastic walls: > 300 mm (12") mm to metallic parts outside the vessel
  - for concrete walls: > 500 mm (20") , otherwise the available measuring range may be reduced.
- Distance (B) between rod or rope probe and internal fittings in the vessel: > 300 mm (12")
- Distance (C) from end of probe to bottom of the vessel:
  - Rope probe: > 150 mm (6 in)
  - Rod probe: > 10 mm (0.4 in)

Additional conditions

- When mounting in the open, a weather protection cover (1) may be installed to protect the device against extreme weather conditions.
- In metallic vessels: Preferably do not mount the probe in the center of the vessel (2), as this would lead to increased interference echoes.
  If a central mounting position can not be avoided, it is crucial to perform an interference echo suppresion(mapping) after the commissioning of the device.
- Do not mount the probe in the filling curtain (3).
- Avoid buckling the rope probe during installation or operation (e.g. through product movement against silo wall) by selecting a suitable mounting location.
- Check the probe regularly for defects.

With suspended rope probes (probe end not fixed at the bottom) the distance between the probe rope and internal fittings in the tank must not fall below 300 mm (12") during the entire process. A sporadic contact between the probe weight and the cone of the vessel, however, does not influence the measurement as long as the dielectric constant of the medium is at least DC = 1.8.

When mounting the electronics housing into a recess (e.g. in a concrete ceiling), observe a minimum distance of 100 mm (4 inch) between the cover of the terminal compartment / electronics compartment and the wall. Otherwise the connection compartment / electronics compartment is not accessible after installation.

Applications with restricted mounting space

Mounting with remote sensor

The device version with a remote sensor is suited for applications with restricted mounting space. In this case the electronics housing is mounted at a separate position from which it is easier accessible.

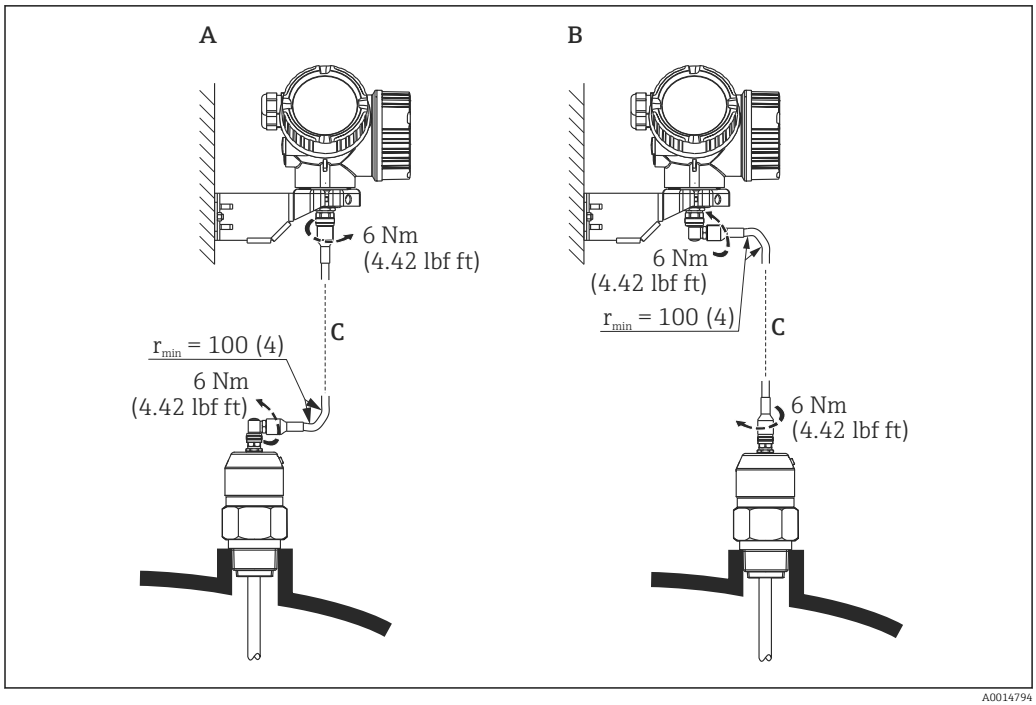

A Angled plug at the probe
B Angled plug at the electronics housing
C Length of the remote cable as ordered

- Product structure, feature 600 "Probe Design":
  - Option MB "Sensor remote, 3m/9ft cable"
  - Option MC "Sensor remote, 6m/18ft cable"
  - Option MB "Sensor remote, 9m/27ft cable"
- The remote cable is supplied with these device versions
  Minimum bending radius: 100 mm (4 inch)
- A mounting bracket for the electronics housing is supplied with these device versions. Mounting options:
  - Wall mounting
  - Pipe mounting; diameter: 42 to 60 mm (1-1/4 to 2 inch)
- The connection cable has got one straight and one angled plug (90°). Depending on the local conditions the angled plug can be connected at the probe or at the electronics housing.

Probe, electronics and connection cable are adjusted to match each other. They are marked by a common serial number. Only components with the same serial number shall be connected to each other.

Notes on the mechanical load of the probe

Tensile load limit of rope probes

Sensor	Feature 060	Probe	Tensile load limit [kN]	Max. rupture load [kN] [1]
FMP56	LA, LB	Rope 4mm (1/6") 316	12	20
	NB, NE	Rope 6mm (1/4") PA>Steel	12	20
FMP57	LA, LB	Rope 4mm (1/6") 316	12	20
	LC, LD	Rope 6mm (1/4") 316	30	42
	NB, NE	Rope 6mm (1/4") PA>Steel	12	20
	NC, NF	Rope 8mm (1/3") PA>Steel	30	42

1) The ceiling of the silo must be designed to withstand this load.

Tensile load

Bulk solids exert tensile forces on rope probes whose height increases with:

- the length of the probe, i.e. max. cover
- the bulk density of the product,
- the silo diameter and
- the diameter of the probe rope

Since the tensile forces are also heavily dependent on the viscosity of the product, a higher safety factor is necessary for highly viscous products and if there is a risk of cornice buildup. In critical cases it is better to use a 6 mm rope instead of a 4 mm one.

The same forces also act on the silo cover. On a fixed rope, the tensile forces are definitely greater, but this can not be calculated. Observe the tensile strength of the probes.

Options for reducing the tensile forces:
- Shorten the probe.
- If the maximum tensile load is exceeded, check whether it would be possible to use a non-contact Ultrasonic or Level-Radar device.

The following diagrams show typical loads for frequently occurring bulk solids as reference values. The calculation is performed for the following conditions:

- Calculation according to DIN 1055, Part 6 for the cylindrical part of the silo.
- Suspended probe (probe end not fixed at the bottom)
- Free-flowing bulk solid, i.e. mass flow. A calculation for core flow is not possible. In the event of collapsing cornices, considerably higher loads can occur.
- The specification for tensile forces contains the safety factor 2 (in addition to the safety factors already taken into account by DIN 1055), which compensates for the normal fluctuation range in pourable bulk solids.

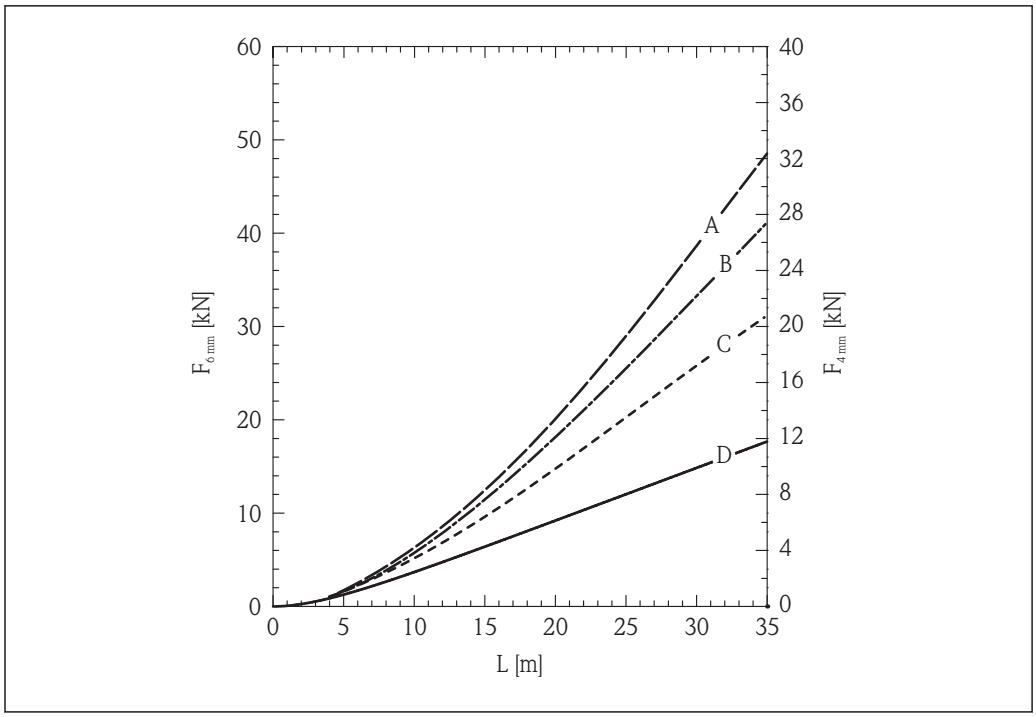

15 Silica sand in silo with smooth metallic walls; tensile load as a function of level L for rope diameters 6mm (0,24 in) and 4mm (0,16 in)

A Silo diameter 12 m (40 ft)
B Silo diameter 9 m (30 ft)
C Silo diameter 6 m (20 ft)
D Silo diameter 3 m (10 ft)

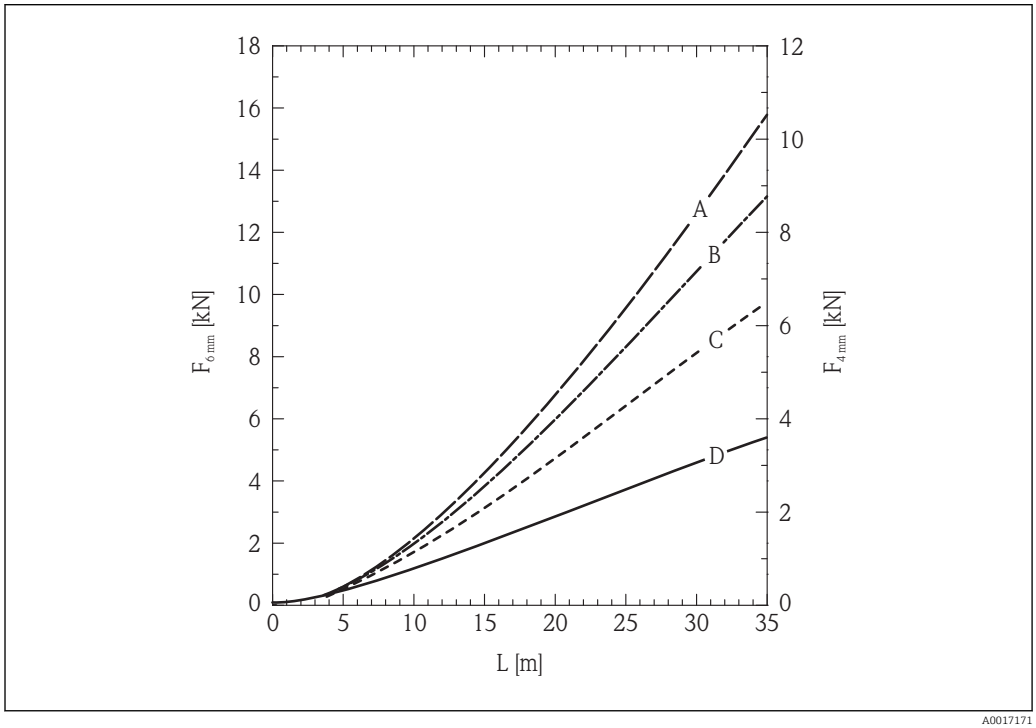

16 Polyethylene pellets in silo with smooth metallic walls; tensile load as a function of level L for rope diameters 6mm (0,24 in) and 4mm (0,16 in)

A Silo diameter 12 m (40 ft)
B Silo diameter 9 m (30 ft)
C Silo diameter 6 m (20 ft)
D Silo diameter 3 m (10 ft)

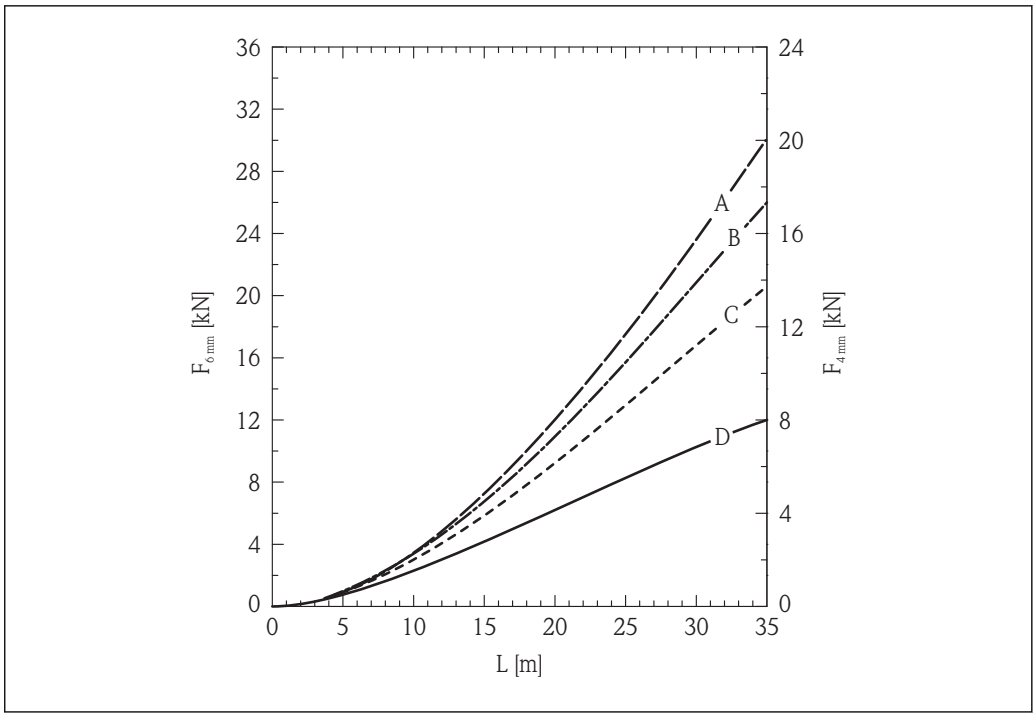

17 *Wheat in silo with smooth metallic walls; tensile load as a function of level L for rope diameters 6mm (0,24 in) and 4mm (0,16 in)*

A Silo diameter 12 m (40 ft)
B Silo diameter 9 m (30 ft)
C Silo diameter 6 m (20 ft)
D Silo diameter 3 m (10 ft)

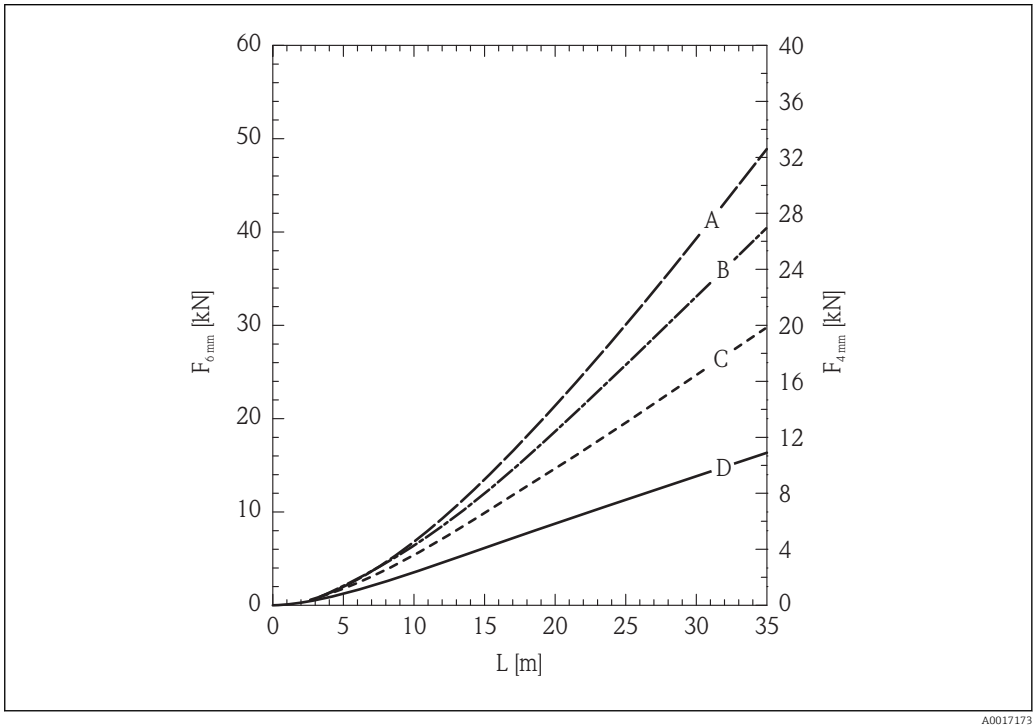

18 *Cement in silo with smooth metallic walls; tensile load as a function of level L for rope diameters 6mm (0,24 in) and 4mm (0,16 in)*

A Tank diameter 12 m (40 ft)
B Tank diameter 9 m (30 ft)
C Tank diameter 6 m (20 ft)
D Tank diameter 3 m (10 ft)

Bending strength of rod probes

Sensor	Feature 060	Probe	Bending strength [Nm]
FMP57	AE, AF	Rod 16mm (0.63") 316L	30

Notes on the process connection

Probes are mounted to the process connection with threaded connections or flanges. If during this installation there is the danger that the probe end moves so much that it touches the tank floor or cone at times, the probe must, if necessary, be shortened and fixed down (→ 49).

Threaded connection

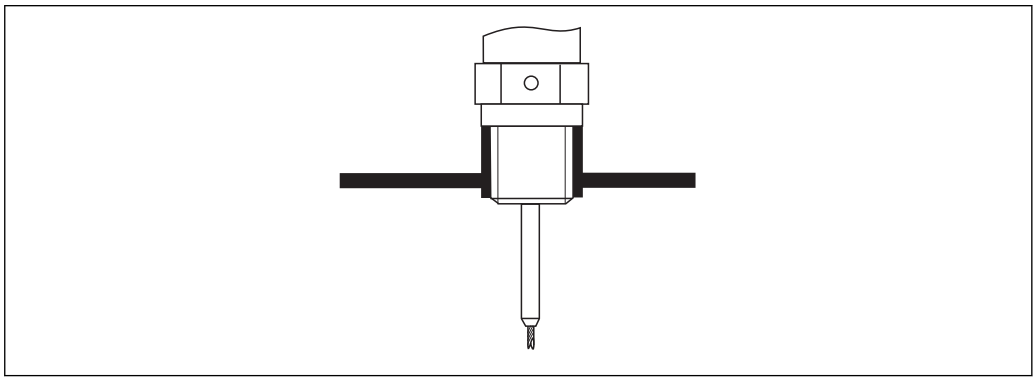

A0015121

19 *Mounting with threaded connection; flush with the container ceiling*

Seal

The thread as well as the type of seal comply to DIN 3852 Part 1, screwed plug form A.

They can be sealed with the following types of sealing rings:

- Thread G3/4": According to DIN 7603 with the dimensions 27 x 32 mm
- Thread G1-1/2": According to DIN 7603 with the dimensions 48 x 55 mm

Please use a sealing ring according to this standard in the form A, C or D and of a material that is resistant to the application.

For the length of the screwed plug refer to the dimensional drawing:
- FMP56: (→ 62)
- FMP57: (→ 63)

Nozzle mounting

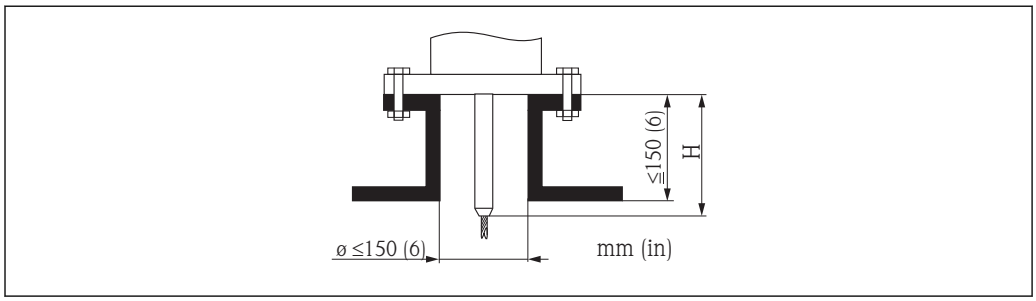

A0015122

Length H of the rigid part of the rope probe

Probe	H
FMP56, Φ rope 4 mm (0.16 in)	94 mm (3.7 in)
FMP57, Φ rope 4 mm (0.16 in)	120 mm (4.7 in)
FMP57, Φ rope 6 mm (0.24 in)	135 mm (5.3 in)

- Permissible nozzle diameter: ≤150 mm (6 in).
  For larger diameters the near range measuring capability may be reduced.
  For nozzles ≥ DN300: (→ 48).
- Permissible nozzle height [5]: ≤150 mm (6 in).
  For a larger height the near range measuring capability may be reduced.
  Larger nozzle heights may be possible in special cases (see section "Rod extension/centering HMP40 for FMP57").

With thermally insulated vessels the nozzle should also be insulated in order to prevent condensate formation.

5) Larger nozzle heights on request

Rod extension/centering HMP40 for FMP57

For FMP57 with rope probes the rod extension/centering HMP 40 is available as an accessory (→ 🖹 90). It has to be used if otherwise the probe rope comes into contact with the lower edge of the nozzle.

This accessory consists of the extension rod corresponding to the nozzle height, on which a centering disk is also mounted if the nozzles are narrow or when working in bulk solids. This component is delivered separately from the device. Please order the probe length correspondingly shorter.

Centering disks with small diameters (DN40 and DN50) may only be used if there is no significant build-up in the nozzle above the disk. The nozzle must not become clogged by the product.

Installation in nozzles ≥ DN300

If installation in ≥ 300mm/12" nozzles is unavoidable, installation must be carried out in accordance with the following sketch.

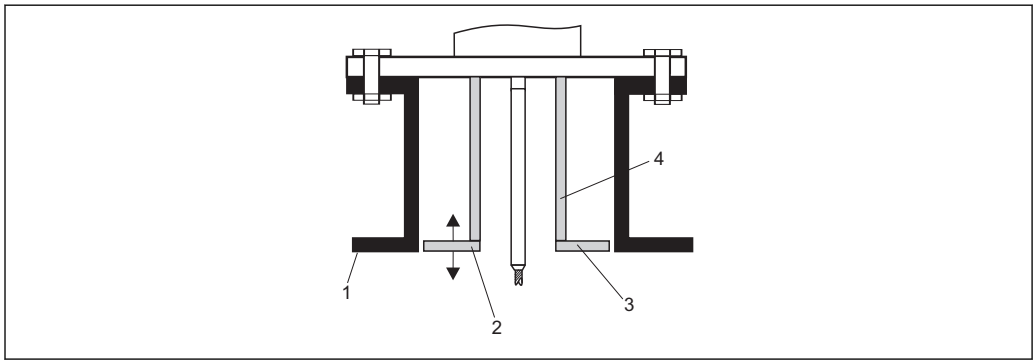

A0014199

1 Lower edge of the nozzle
2 Approx. flush with the lower edge of the nozzle (± 50 mm/2")
3 Plate
4 Pipe Φ 150 to 180 mm (6 to 7 inch)

Nozzle diameter	Plate diameter
300 mm (12")	280 mm (11")
≥ 400 mm (16")	≥ 350 mm (14")

Securing the probe

Securing rope probes

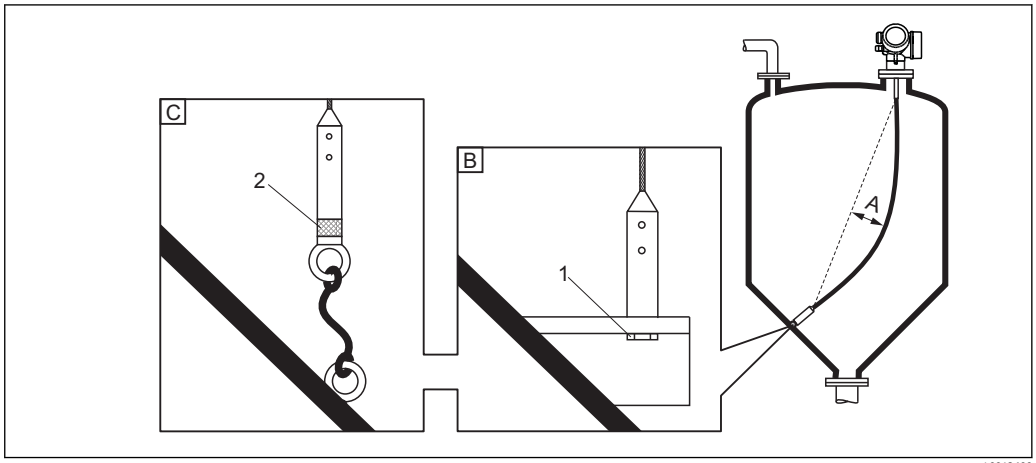

A Sag of the rope: ≥ 1 cm per 1m of the probe length (0.12 inch per 1 ft of the probe length)
B Reliably grounded end of probe
C Reliably isolated end of probe
1: Mounting and contact with a bolt
2 Mounting kit isolated

- The end of the probe needs to be secured under the following conditions:
  - if otherwise the probe sporadically comes into contact with the wall of the vessel, the outlet cone, internal fittings or other parts of the installation.
  - if otherwise the probe sporadically gets close to a concrete wall (minimum distance 0.5 m / 20 inch).
- The end of probe can be secured at its internal thread
  - rope 4 mm (1/6"), 316: M 14
  - rope 6 mm (1/4"), 316: M 20
  - rope 6mm (1/4"), PA>steel: M14
  - rope 8mm (1/3"), PA>steel: M20
- Preferably use the 6 mm (1/4") rope probe due to the higher tensile strength when fixing a rope probe.
- The fixing must be either reliably grounded or reliably insulated. If it is not possible to mount the probe weight with a reliably insulated connection, it can be secured using an isolated eyelet, which is available as an accessory.
- In order to prevent an extremely high tensile load (e.g. due to thermal expansion) and the risk of rope crack, the rope has to be slack. Make the rope longer than the required measuring range such that there is a sag in the middle of the rope that is ≥ 1cm/(1 m rope length) |0.12 inch/(1 ft rope length)|.
  Tensile load limit of rope probes: (→ 🖹 41)

Securing rod probes

- For Ex-approvals: For probe lengths ≥3 m (10 ft) a support is required.
- In general, rod probes must be supported if there is a horizontal flow (e.g. from an agitator) or in the case of strong vibrations.
- Rod probes may only be supported at the end of the probe.

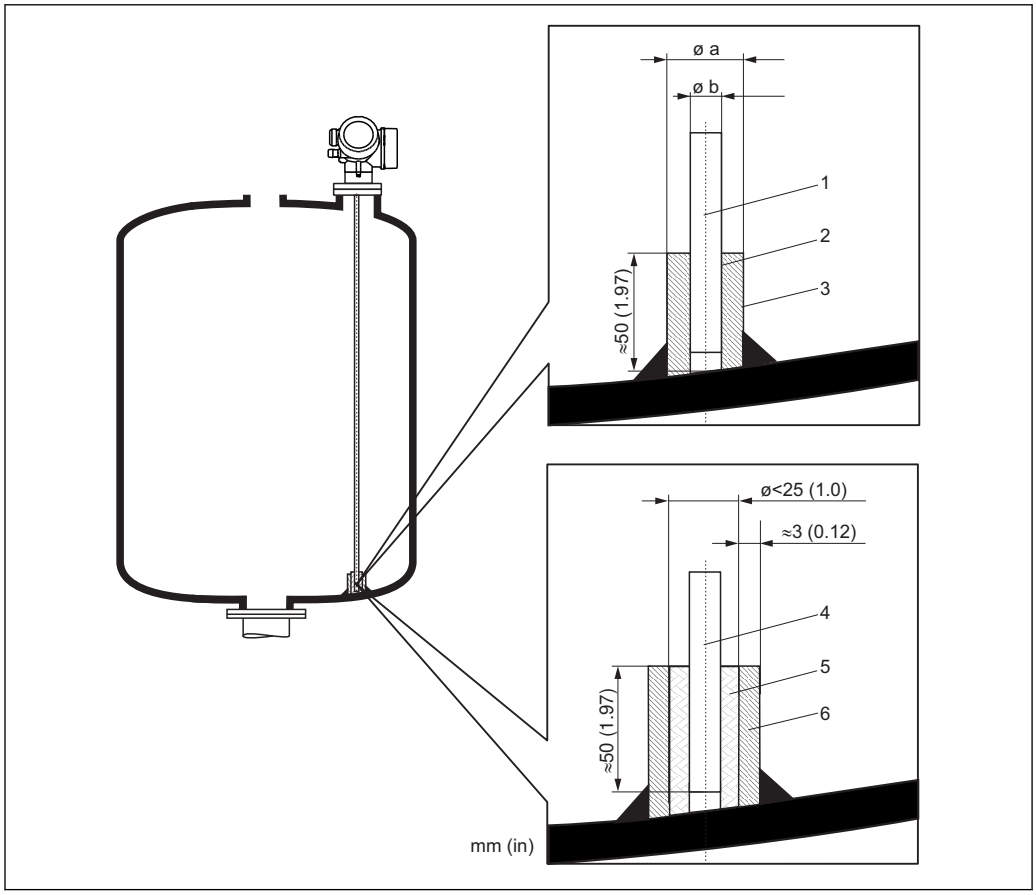

1 *Probe rod, uncoated*
2 *Sleeve bored tight to ensure electrical contact between the rod and sleeve!*
3 *Short metal pipe, e.g. welded in place*
4 *Probe rod, coated*
5 *Plastic sleeve, e.g. PTFE, PEEK or PPS*
6 *Short metal pipe, e.g. welded in place*

NOTICE

Poor grounding of the end of probe may cause measuring errors.

▶ Apply a narrow sleeve which has good electrical contact to the probe.

NOTICE

Welding may damage the main electronics module.

▶ Before welding: Ground the probe and dismount electronics.

Special mounting conditions

Concrete silos

Installation, for example, into a thick concrete ceiling should be made flush with the lower edge. Alternatively, the probe can also be installed into a pipe that must not protrude over the lower edge of the silo ceiling. The pipe should be kept at a minimum length. Installation suggestions see diagram.

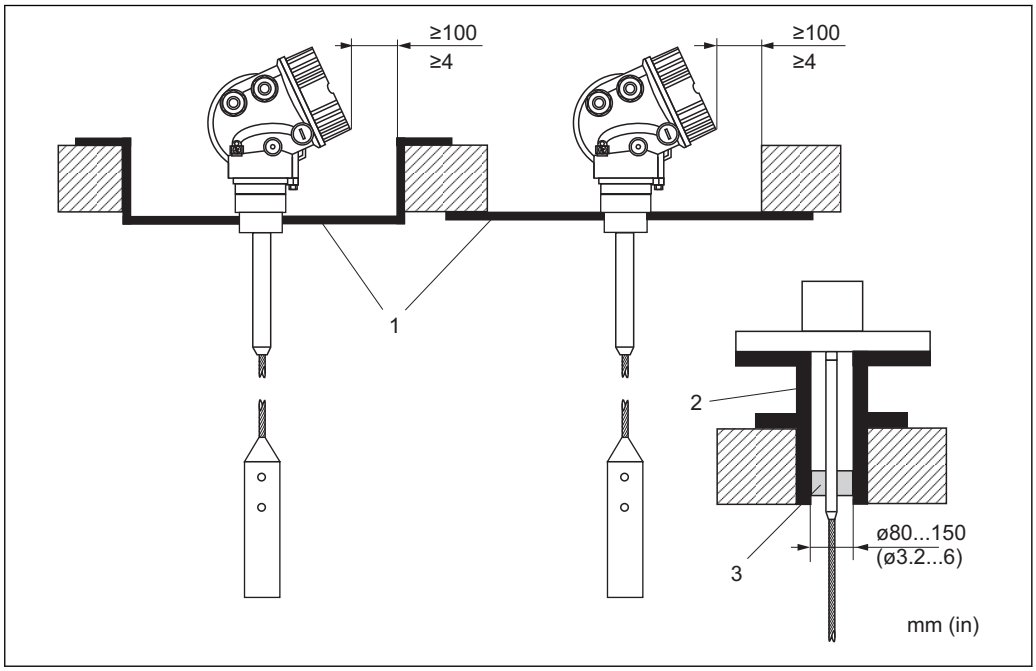

A0014138

1 Metal sheet
2 Metal tube
3 Extension rod / Centering HMP40 (see "Accessories")

Note for installations with rod extension/center washer (accessories): Strong dust generation can lead to build-up behind the center washer. This can cause an interference signal. For other installation possibilities please contact Endress+Hauser.

Installation from the side

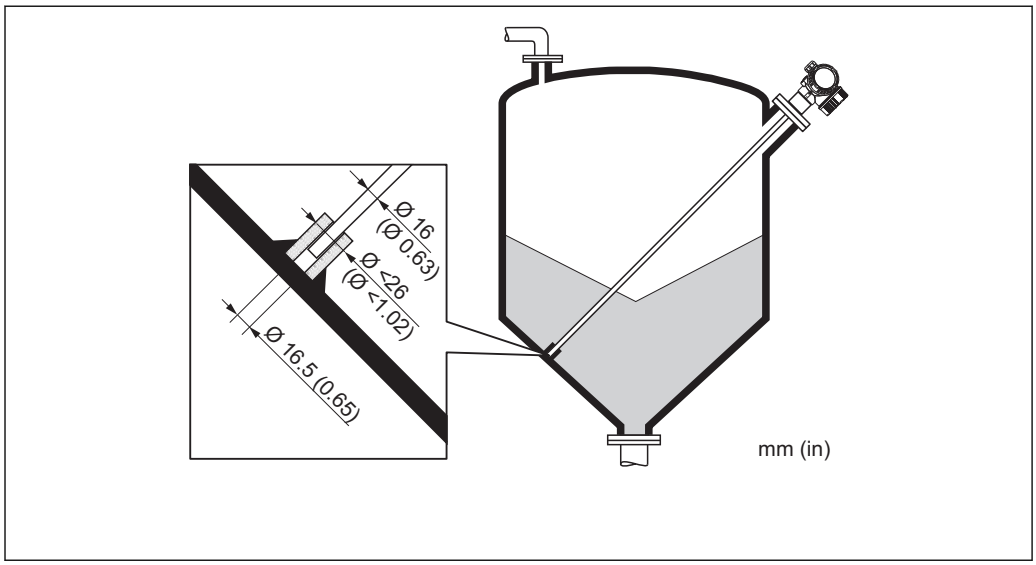

A0014140

- If installation from above is not possible, the Levelflex can also be mounted from the side.
- In this case, always fix the rope probe (→ 🖹 49) .
- Support rod probe if the lateral loadbearing capacity is exceeded (→ 🖹 44). Only fix rod probes at the probe end (→ 🖹 49).

Non-metallic vessels

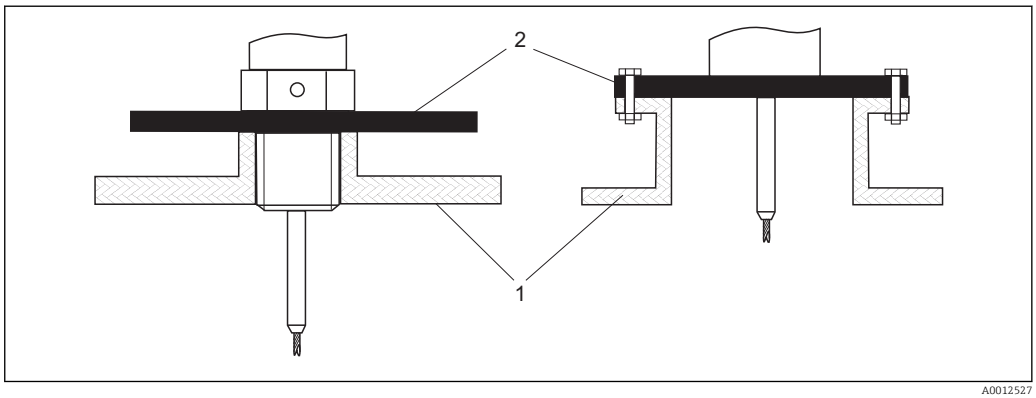

A0012527

1 Non-metallic vessel
2 Metal sheet or metal flange

To measure, Levelflex with a rod probe needs a metallic surface at the process connection. Therefore:

- Select an instrument version with metal flange (minimum size DN50/2").
- Or: mount a metal sheet with a diameter of at least 200 mm (8") to the probe at the process connection. Its orientation must be perpendicular to the probe.

Vessels with heat insulation

If process temperatures are high, the device must be included in normal tank insulation to prevent the electronics heating up as a result of heat radiation or convection. The insulation may not exceed beyond the points labeled "MAX" in the drawings.

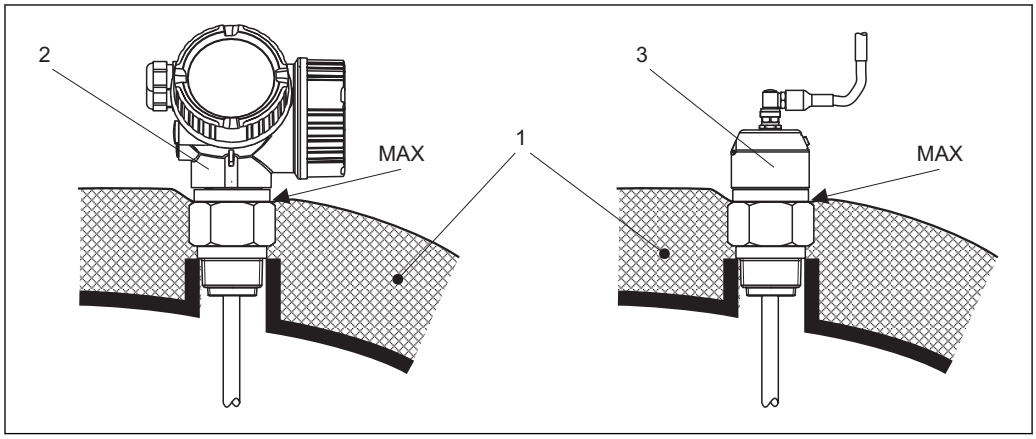

20 *Process connection with thread - FMP56, FMP57*

1 *Tank insulation*
2 *Compact device*
3 *Sensor remote (feature 600)*

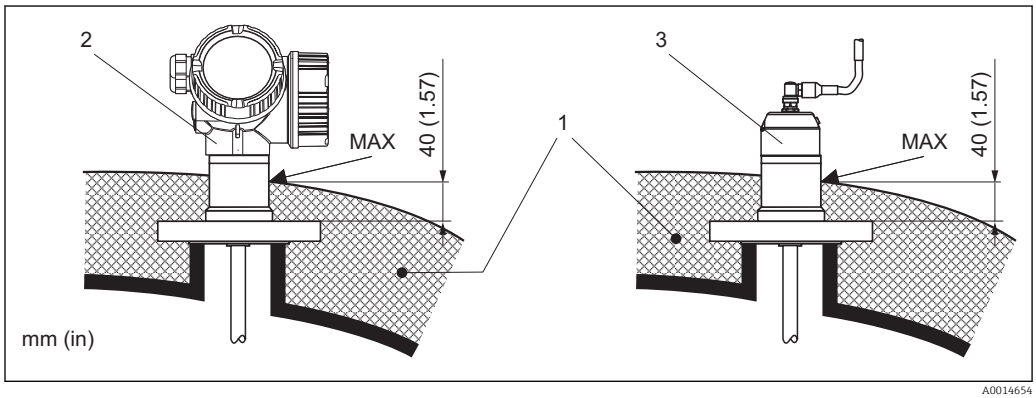

21 *Process connection with flange - FMP57*

1 *Tank insulation*
2 *Compact device*
3 *Sensor remote (feature 600)*

Operating conditions: Environment

Ambient temperature range

Measuring device	–40 to +80 °C (–40 to +176 °F)
Local display	–20 to +70 °C (–4 to +158 °F), the readability of the display may be impaired at temperatures outside the temperature range.
Connection cable (for "Probe Design" = "Sensor remote")	max. 100 °C (212 °F)
Remote display FHX50	–40 to 80 °C (–40 to 176 °F)

When operating the device in the open with strong sunlight:
- Mount the device in a shady position.
- Avoid direct sunlight, especially in warmer regions.
- Use a weather protection cover (see accessories).

Ambient temperature limits

The following diagrams take into account only function requirements. There may be further restrictions for certified device versions. Please refere to the separate Safety Instructions (→ 97).

With a temperature (T_p) at the process connection the admissible ambient temperature (T_a) is reduced according to the following diagram (temperature derating):

Temperature derating for FMP56 with threaded connection G¾ or NPT¾

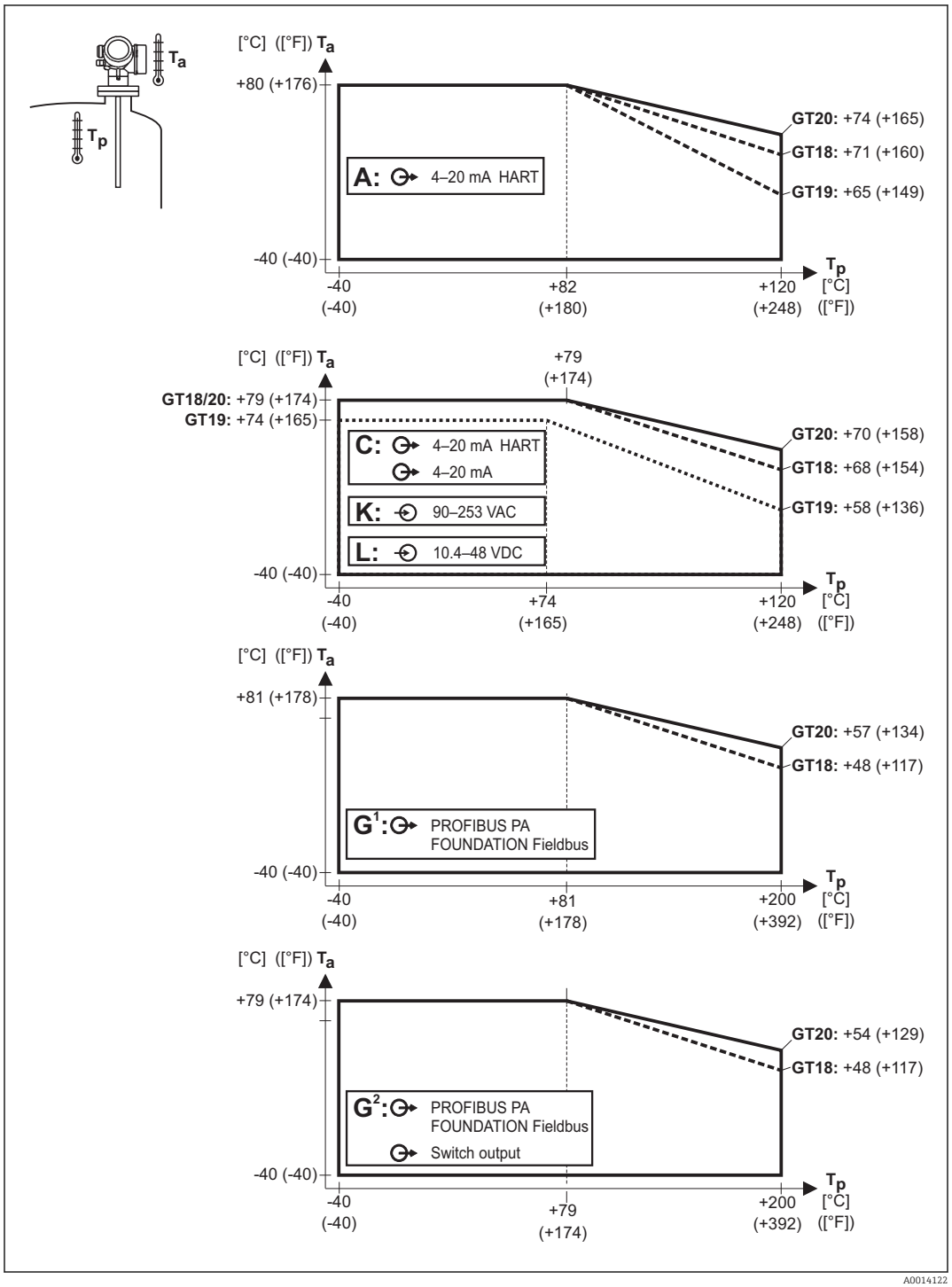

GT18 = stainless steel housing
GT19 = plastic housing
GT20 = aluminum housing

A = 1 current output
C = 2 current outputs
G¹, G² = PROFIBUS PA [1)]
K, L = 4-wire

T_a = ambient temperature
T_p = temperature at the process connection

1) For PROFIBUS PA and FOUNDATION Fieldbus the temperature derating depends on the usage of the switch output. (G¹: switch output not connected; G2: switch output connected).

Temperature derating for FMP57

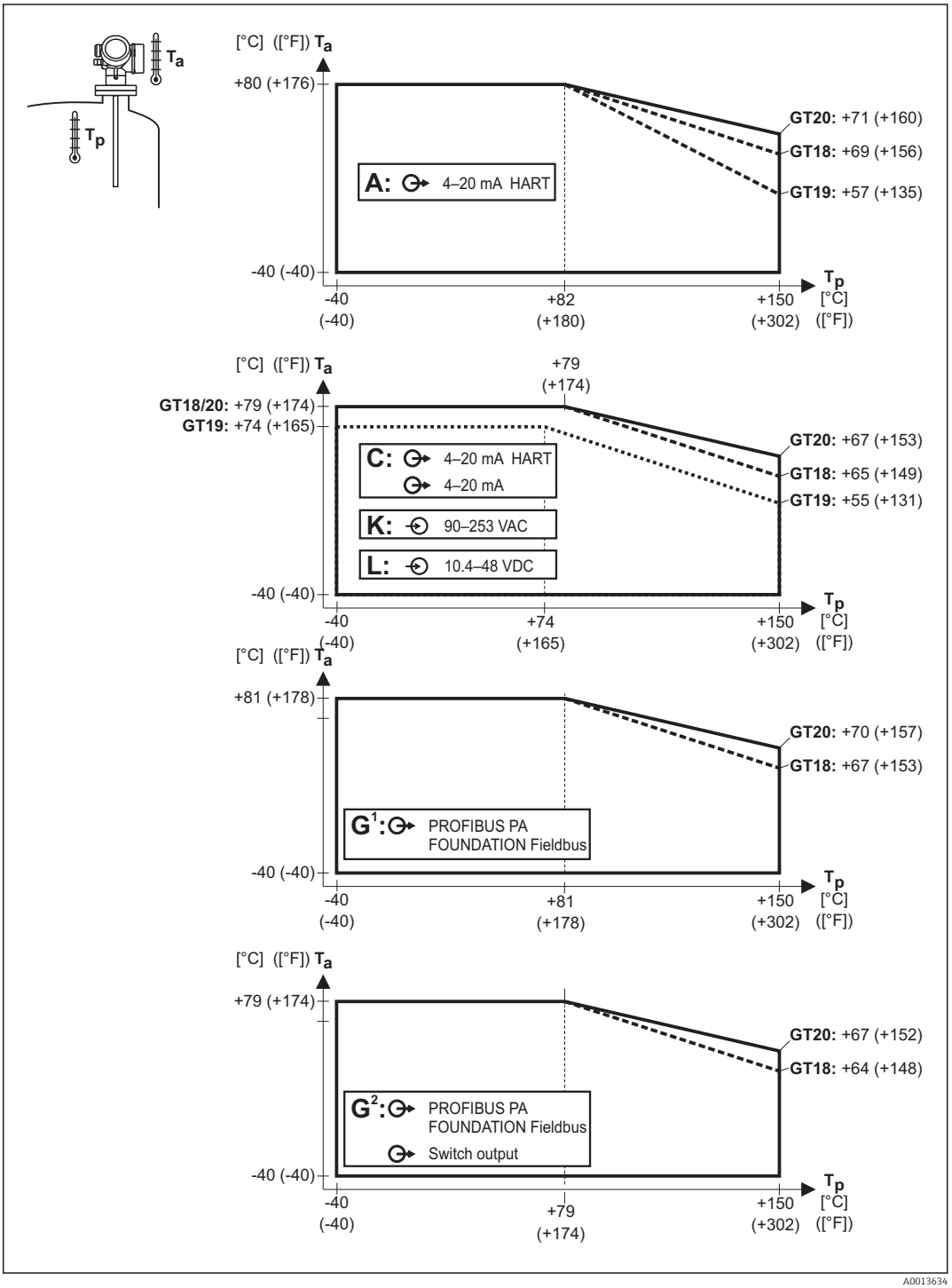

GT18 = stainless steel housing
GT19 = plastic housing
GT20 = aluminum housing

A = 1 current output
C = 2 current outputs
G1, G2 = PROFIBUS PA 1)
K, L = 4-wire

T_a = ambient temperature
T_p = temperature at the process connection

1) For PROFIBUS PA and FOUNDATION Fieldbus the temperature derating depends on the usage of the switch output. (G1: switch output not connected; G2: switch output connected).

Storage temperature	−40 to +80 °C (−40 to +176 °F)
Climate class	DIN EN 60068-2-38 (test Z/AD)
Altitude according to IEC61010-1 Ed.3	Up to 2 000 m (6 600 ft) above MSL. Can be expanded to 3 000 m (9 800 ft) above MSL by application of an overvoltage protection, e.g. HAW562 or HAW569.
Degree of protection	▪ With closed housing tested according to: – IP68, NEMA6P (24 h at 1.83 m under water surface) [6] – For plastic housing with transparent cover (display module): IP68 (24 h at 1.00 m under water surface) [7] – IP66, NEMA4X ▪ With open housing: IP20, NEMA1 ▪ Display module: IP22, NEMA2 Degree of protection IP68 NEMA6P applies for M12 PROFIBUS PA plugs only when the PROFIBUS cable is plugged in and is also rated IP68 NEMA6P.
Vibration resistance	DIN EN 60068-2-64 / IEC 68-2-64: 20 to 2 000 Hz, 1 $(m/s^2)^2/Hz$
Cleaning the probe	Depending on the application, contamination or buildup can accumulate on the probe. A thin, even layer only influences measurement slightly. Thick layers can dampen the signal and then reduce the measuring range. Severe, uneven buildup, adhesion e.g. through crystallization, can lead to incorrect measurement. In this case, we recommend that you use a non-contact measuring principle, or check the probe regularly for soiling.
Electromagnetic compatibility (EMC)	Electromagnetic compatibility to all relevant requirements of the EN 61326- series and NAMUR recommendation EMC (NE21). For details see declaration of conformity. [8]. If only the analogue signal is used, unshielded interconnection lines are sufficient for the installation. In case of using the digital signal (HART/ PA/ FF) use shielded interconnection lines. Use a shielded cable when working with a digital communications signal. Max. fluctuations during EMC- tests: < 0.5 % of the span. When installing the probes in metal and concrete tanks and when using a coax probe: ▪ Interference emission to EN 61326 - x series, electrical equipment Class B. ▪ Interference immunity to EN 61326 - x series, requirements for industrial areas and NAMUR Recommendation NE 21 (EMC) The measured value can be affected by strong electromagnetic fields when installing rod and rope probes without a shielding/metallic wall, e.g. in plastic and wooden silos. ▪ Interference emission to EN 61326 - x series, electrical equipment Class A. ▪ Interference immunity: the measured value can be affected by strong electromagnetic fields.

6) also valid for the "Sensor remote" version
7) This restriction is valid if the following options of the product structure have been selected at the same time: 030("Display, Operation") = C("SD02") or E("SD03"); 040("Housing") = A("GT19").
8) Can be downloaded from www.endress.com.

Process

Process temperature range

The maximum permitted temperature at the process connection is determined by the O-ring version ordered:

Gerät	O-Ring-Werkstoff	Prozesstempertaur [1]
FMP56	FKM (Viton GLT)	−30 to +120 °C (−22 to +248 °F)
	EPDM (70C4 pW FKN)	−40 to +120 °C (−40 to +248 °F)
FMP57	FKM (Viton GLT)	−30 to +150 °C (−22 to +302 °F)
	EPDM (E7502 or E7515)	−40 to +120 °C (−40 to +248 °F)

1) with PA coated rope probes max. 100 °C (+212 °F)

With uncoated probes, the medium temperature may be higher, under the condition that the maximum process temperature specified in the table above is not exceeded at the process connection.

However, when using rope probes, the stability of the probe rope is reduced by structural changes at temperatures above 350 °C (662 °F).

Process pressure range

Device	Process pressure
FMP56, FMP57	−1 to 16 bar (−14.5 to 232 psi)

This range may be reduced by the selected process connection. The pressure rating (PN) specified on the flanges refers to a reference temperature of 20 °C, for ASME flanges 100 °F. Pay attention to pressure-temperature dependencies.

Please refer to the following standards for the pressure values permitted for higher temperatures:
- EN 1092-1: 2001 Tab. 18
  With regard to their temperature stability properties, the materials 1.4435 and 1.4404 are grouped under 13E0 in EN 1092-1 Tab. 18. The chemical composition of the two materials can be identical.
- ASME B 16.5a - 1998 Tab. 2-2.2 F316
- ASME B 16.5a - 1998 Tab. 2.3.8 N10276
- JIS B 2220

Dielectric constant (DC)

Rod and rope probe: DC (ε_r) ≥ 1.6

Expansion of the rope probes through tension and temperature

4 mm rope:
- Elongation through tension: at max. permitted tensile load (12 KN): 11 mm / m rope length
- Elongation through temperature increase from 30 °C (86 °F) to 150 °C (302 °F): 2 mm / m rope length

6 mm rope:
- Elongation through tension: at max. permitted tensile load (30 KN): 13 mm / m rope length
- Elongation through temperature increase from 30 °C (86 °F) to 150 °C (302 °F): 2 mm / m rope length

Mechanical construction

Dimensions

Dimensions of the electronics housing

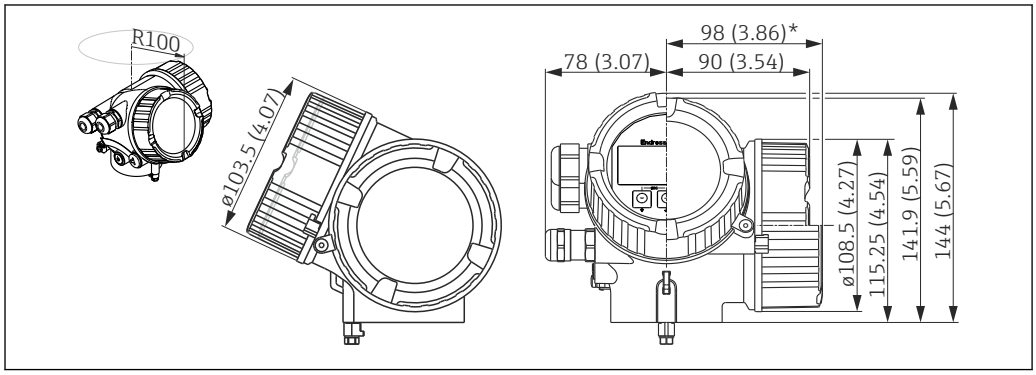

22 *Housing GT18 (316L); Dimensions in mm (in)*

**for devices with integrated overvoltage protection.*

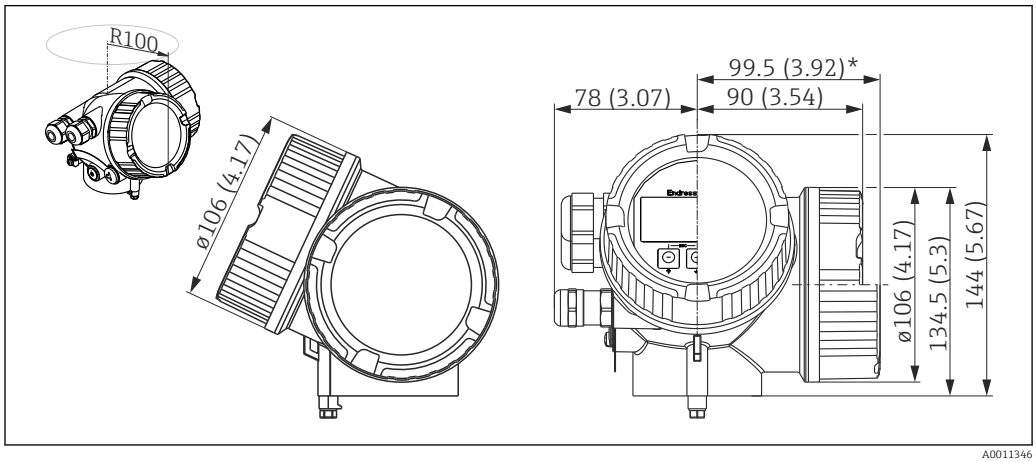

23 *Housing GT19 (Plastics PBT); Dimensions in mm (in)*

**for devices with integrated overvoltage protection.*

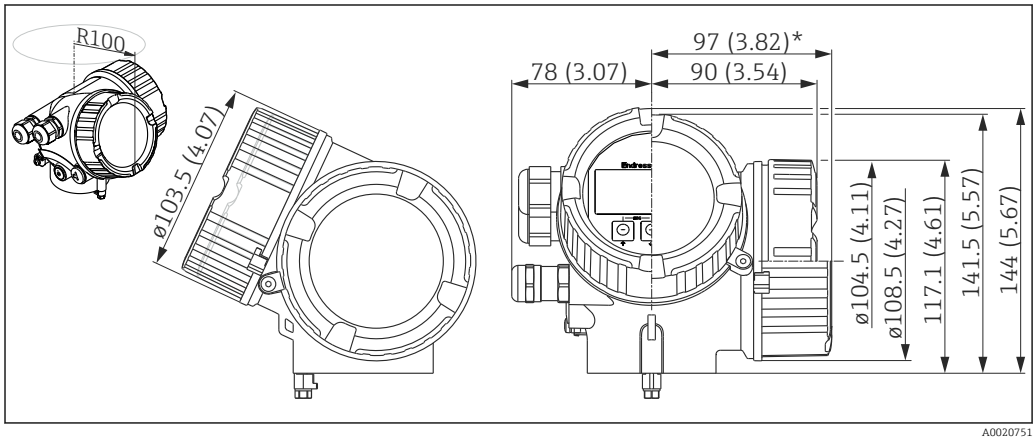

24 *Housing GT20 (Alu coated); Dimensions in mm (in)*

**for devices with integrated overvoltage protection.*

Dimensions of the mounting bracket

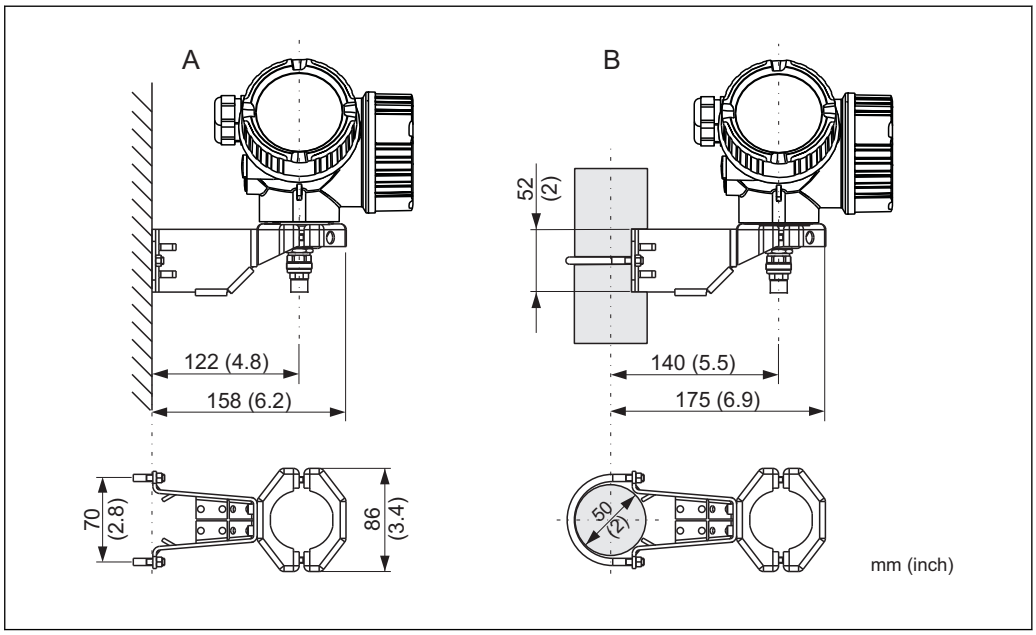

25 Mounting bracket for the electronics housing

A Wall mounting
B Pipe mounting

For the "Sensor remote" device version (see feature 060 of the product structure), the mounting bracket is part of the delivery. If required, it can also be ordered as an accessory (order code 71102216).

FMP56: Dimensions of process connection and probe

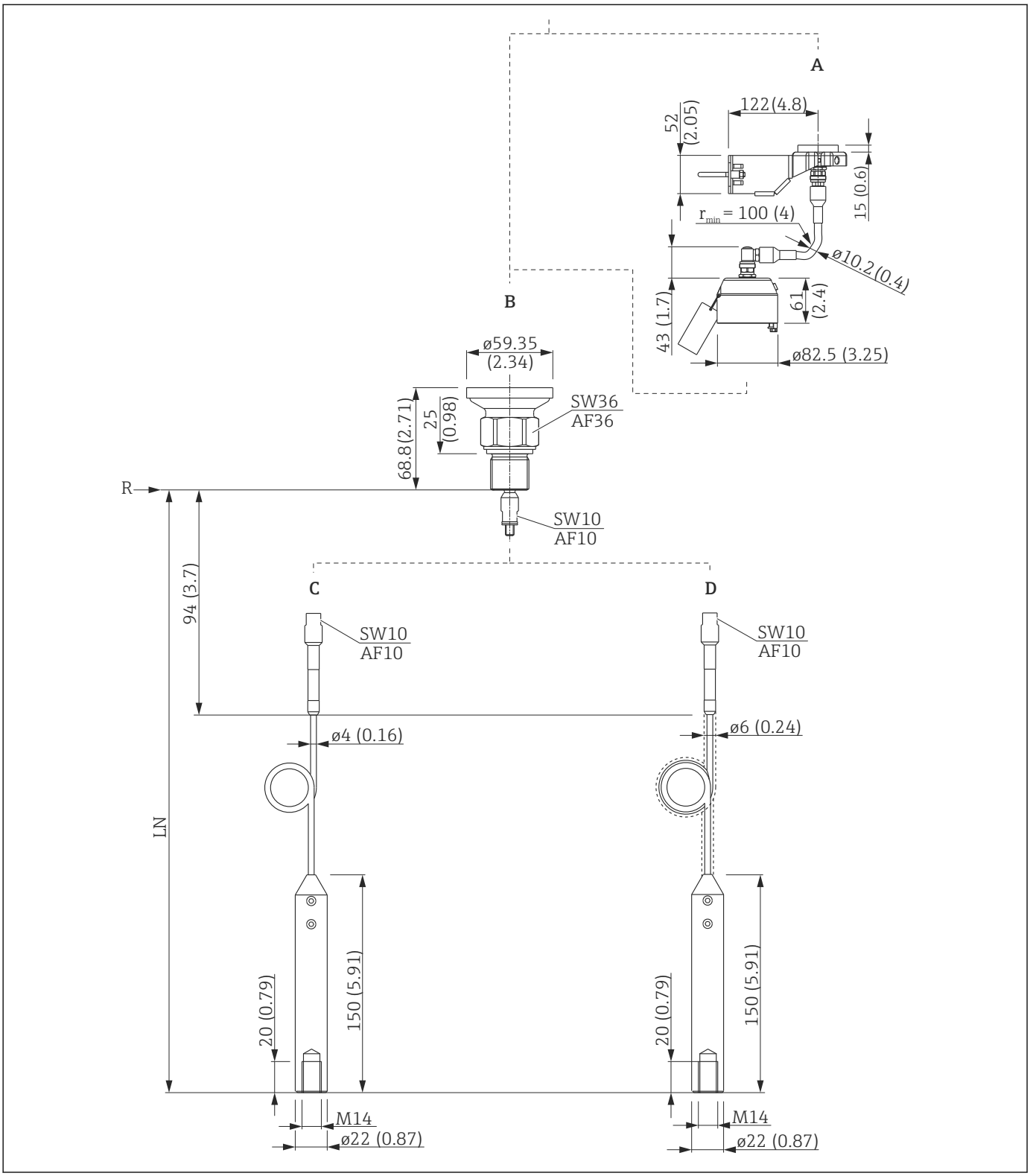

26 *FMP56: Process connection / probe. Unit of measurement mm (in)*

A Mounting bracket for probe design "Sensor remote" Feature 600)
B Thread ISO228 G3/4 or ANSI MNPT3/4 (Feature 100)
C Rope probe 4mm or 1/6" (Feature 060)
D Rope probe 6mm or 1/4", PA>Steel (Feature 060)
LN Length of probe
R Reference point of the measurement

FMP57: Dimensions of process connection and probe

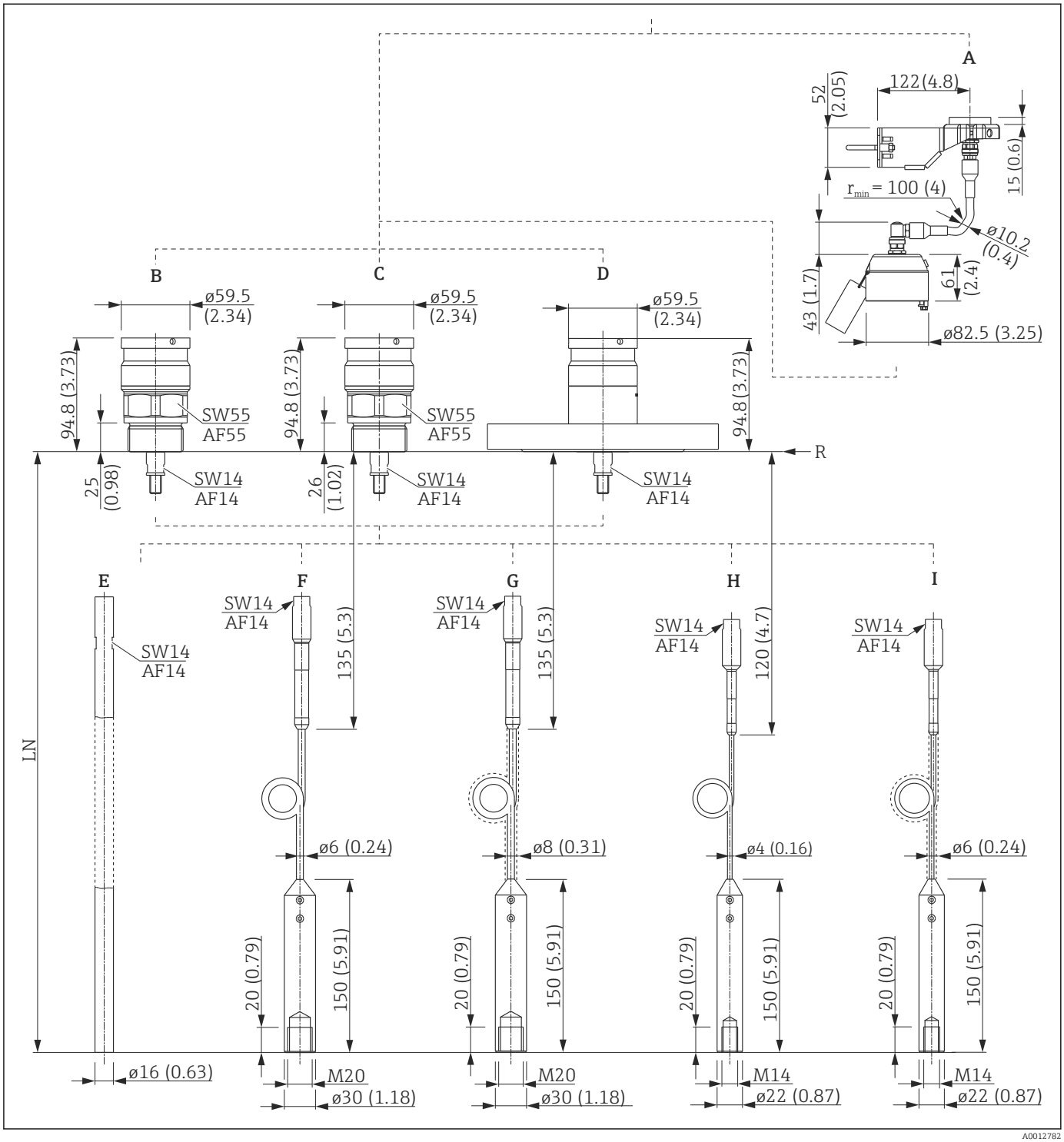

27 *FMP57: Process connection / probe. Unit of measurement mm (in)*

- *A Mounting bracket for probe design "Sensor remote" (Feature 600)*
- *B Thread ISO228 G1-1/2 (Feature 100)*
- *C Thread ANSI MNPT1-1/2 (Feature 100)*
- *D Flange ANSI B16.5, EN1092-1, JIS B2220 (Feature 100)*
- *E Rod probe 16mm (Feature 060)*
- *F Rope probe 6mm or 1/4" (Feature 060)*
- *G Rope probe 8mm or 1/3", PA>Steel (Feature 060)*
- *H Rope probe 4mm or 1/6" (Feature 060)*
- *I Rope probe 6mm or 1/4", PA>Steel (Feature 060)*
- *LN Length of probe*
- *R Reference point of the measurement*

Tolerance of probe length

Rod probes				
Over [m (ft)]	–	1 (3,3)	3 (9,8)	6 (20)
Up to [m (ft)]	1 (3,3)	3 (9,8)	6 (20)	–
Admissible tolerance [mm (in)]	-5 (-0,2)	-10 (-0,39)	-20 (-0,79)	-30 (-1,18)

Rope probes				
Over [m (ft)]	–	1 (3,3)	3 (9,8)	6 (20)
Up to [m (ft)]	1 (3,3)	3 (9,8)	6 (20)	–
Admissible tolerance [mm (in)]	-10 (-0,39)	-20 (-0,79)	-30 (-1,18)	-40 (-1,57)

Shortening probes

If necessary, probes can be shortened. When doing so, the following must be observed:

Shortening rod probes

Rod probes must be shortened if the distance to the container floor or outlet cone is less than 10 mm (0.4 in). The rods of a rod probe are shortened by sawing at the bottom end.

Rod probes of FMP52 can **not** be shortened as they are coated.

Shortening rope probes

Rope probes must be shortened if the distance to the container floor or outlet cone is less than 150 mm (6 in).

Weight

Housing

Part	Weight
Housing GT18 - stainless steel	approx. 4.5 kg
Housing GT19 - plastic	approx. 1.2 kg
Housing GT20 - aluminium	approx. 1.9 kg

FMP56

Part	Weight	Part	Weight
Sensor	approx. 0.8 kg	Rope probe 4 mm	approx. 0.1 kg/m probe length
		Rope probe 6 mm	approx. 0.2 kg/m probe length

FMP57

Part	Weight	Part	Weight
Sensor	approx. 1.4 kg + weight of flange	Rope probe 6 mm	approx. 0.2 kg/m probe length
Rope probe 4 mm	approx. 0.1 kg/m probe length	Rod probe 16 mm	approx. 1.6 kg/m probe length

Materials: GT18 housing

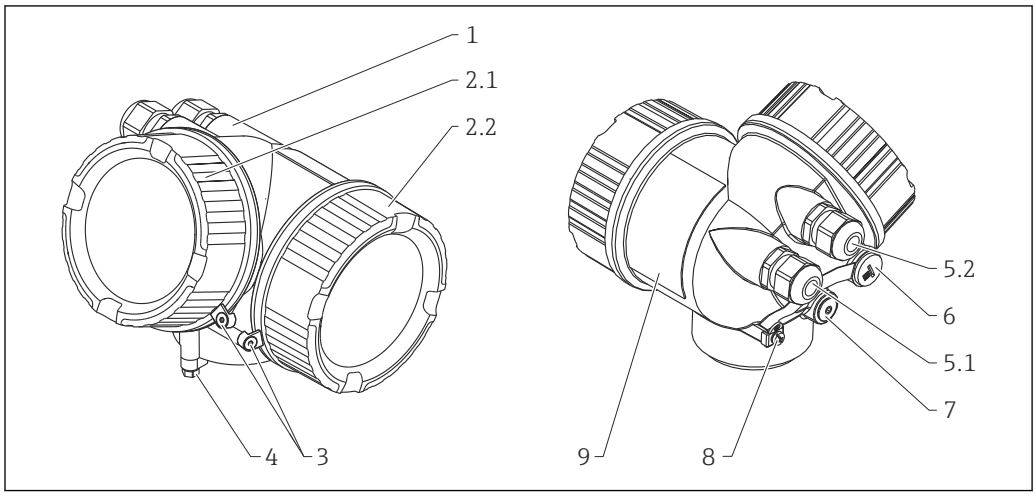

A0013788

No.	Part	Material
1	Housing	316L (CF-3M, 1.4404)
2.1	Cover of the electronics compartment	▪ Cover: 316L (CF-3M, 1.4404) ▪ Window: glass ▪ Cover seal: EPDM ▪ Thread-coating: Heat-curing lubricant varnish
2.2	Cover of the terminal compartment	▪ Cover: 316L (CF-3M, 1.4404) ▪ Cover seal: EPDM ▪ Thread-coating: Heat-curing lubricant varnish
3	Cover lock	▪ Screw: A4 ▪ Clamp: 316L (1.4404)
4	Lock at the housing neck	▪ Screw: A4-70 ▪ Clamp: 316L (1.4404)
5.1	Dummy plug, cable gland, adapter or plug (depending on the device version)	▪ Dummy plug, depending on the device version: – PE – PBT-GF ▪ Cable gland: 316L (1.4404) or nickel-plated brass ▪ Adapter: 316L (1.4404/1.4435) ▪ Seal: EPDM ▪ M12 plug: Nickel-plated brass [1)] ▪ 7/8" plug: 316 (1.4401) [2)]
5.2	Dummy plug, cable gland or adapter (depending on the device version)	▪ Dummy plug: 316L (1.4404) ▪ Cable gland: 316L (1.4404) or nickel-plated brass ▪ Adapter: 316L (1.4404/1.4435) ▪ Seal: EPDM
6	Dummy plug or M12 socket (depending on the device version)	▪ Dummy plug: 316L (1.4404) ▪ M12 socket: 316L (1.4404)
7	Pressure relief stopper	316L (1.4404)
8	Ground terminal	▪ Screw: A4 ▪ Spring washer: A4 ▪ Clamp: 316L (1.4404) ▪ Holder: 316L (1.4404)
9	Nameplate	▪ Plate: 316L (1.4404) ▪ Groove pin: A4 (1.4571)

1) For the version with M12 plug the sealing material is Viton.
2) For the version with 7/8" plug, the sealing material is NBR.

Materials: GT19 housing

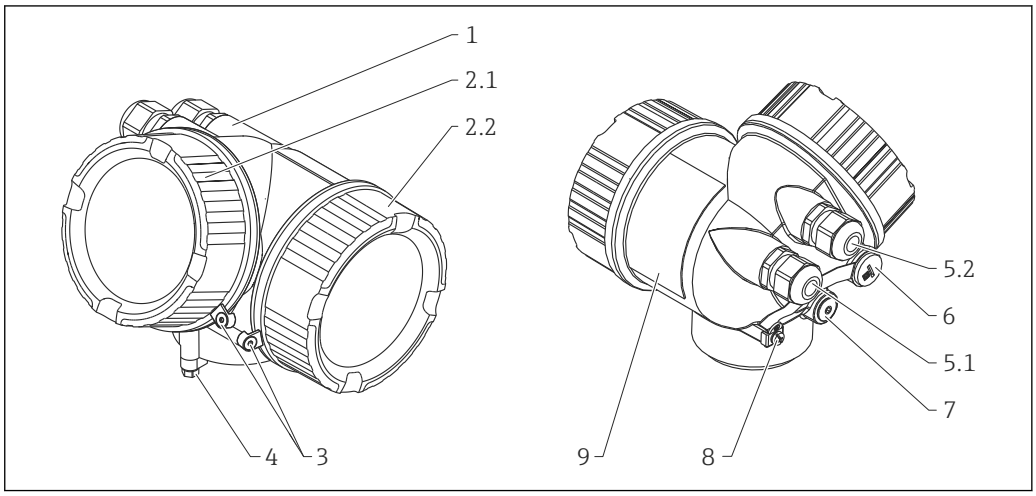

A0013788

No.	Part	Material
1	Housing	PBT
2.1	Cover of the electronics compartment	▪ Cover, depending on the device version: – PA (see-through cover) – PBT (non-transparent cover) ▪ Cover seal: EPDM ▪ Thread-coating: Heat-curing lubricant varnish
2.2	Cover of the terminal compartment	▪ Cover: PBT ▪ Cover seal: EPDM ▪ Thread-coating: Heat-curing lubricant varnish
4	Lock at the housing neck	▪ Screw: A4-70 ▪ Clamp: 316L (1.4404)
5.1	Dummy plug, cable gland, adapter or plug (depending on the device version)	▪ Dummy plug, depending on the device version: – PE – PBT-GF ▪ Cable gland, depending on the device version: – Nickel-plated brass (CuZn) – PA ▪ Adapter: 316L (1.4404/1.4435) ▪ Seal: EPDM ▪ M12 plug: Nickel-plated brass [1)] ▪ 7/8" plug: 316 (1.4401) [2)]
5.2	Dummy plug, cable gland or adapter (depending on the device version)	▪ Dummy plug, depending on the device version: – PE – PBT-GF – Nickel-plated steel ▪ Cable gland, depending on the device version: – Nickel-plated brass (CuZn) – PA ▪ Adapter: 316L (1.4404/1.4435) ▪ Seal: EPDM
6	Dummy plug or M12 socket (depending on the device version)	▪ Dummy plug: Nickel-plated brass (CuZn) ▪ M12 socket: Nickel-plated GD-Zn
7	Pressure relief stopper	Nickel-plated brass (CuZn)
8	Ground terminal	▪ Screw: A2 ▪ Spring washer: A4 ▪ Clamp: 304 (1.4301) ▪ Holder: 304 (1.4301)
9	Nameplate	Sticker

1) For the version with M12 plug the sealing material is Viton.
2) For the version with 7/8" plug, the sealing material is NBR.

Materials: GT20 housing

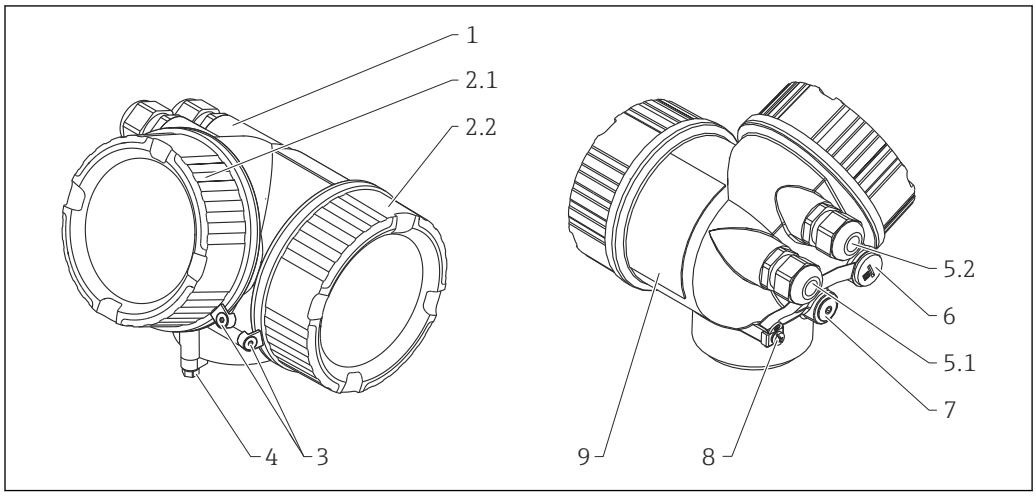

A0013788

Nr.	Part	Material
1	Housing	▪ Housing: AlSi10Mg(<0,1% Cu) ▪ Coating: Polyester
2.1	Cover of the electronics compartment	▪ Cover: AlSi10Mg(<0,1% Cu) ▪ Window: Glass ▪ Cover seal: EPDM ▪ Thread-coating: Heat-curing lubricant varnish
2.2	Cover of the terminal compartment	▪ Cover: AlSi10Mg(<0,1% Cu) ▪ Cover seal: EPDM ▪ Thread-coating: Heat-curing lubricant varnish
3	Cover lock	▪ Screw: A4 ▪ Clamp: 316L (1.4404)
4	Lock at the housing neck	▪ Screw: A4-70 ▪ Clamp: 316L (1.4404)
5.1	Dummy plug, cable gland, adapter or plug (depending on the device version)	▪ Dummy plug, depending on the device version: – PE – PBT-GF ▪ Cable gland, depending on the device version: – Nickel-plated brass (CuZn) – PA ▪ Adapter: 316L (1.4404/1.4435) ▪ Seal: EPDM ▪ M12 plug: Nickel-plated brass [1)] ▪ 7/8" plug: 316 (1.4401) [2)]
5.2	Dummy plug, cable gland or adapter (depending on the device version)	▪ Dummy plug, depending on the device version: – PE – PBT-GF – Nickel-plated steel ▪ Cable gland, depending on the device version: – Nickel-plated brass (CuZn) – PA ▪ Adapter: 316L (1.4404/1.4435) ▪ Seal: EPDM
6	Dummy plug or M12 socket (depending on the device version)	▪ Dummy plug : Nickel-plated brass (CuZn) ▪ M12 socket: Nickel-plated GD-Zn
7	Pressure relief stopper	Nickel-plated brass (CuZn)

Nr.	Part	Material
8	Ground terminal	▪ Screw: A2 ▪ Spring washer: A2 ▪ Clamp: 304 (1.4301) ▪ Holder: 304 (1.4301)
9	Nameplate	Sticker

1) For the version with M12 plug the sealing material is Viton.
2) For the version with 7/8" plug, the sealing material is NBR.

Materials: Process connection

Endress+Hauser supplies DIN/EN flanges made of stainless steel according to AISI 316L (DIN/EN material number 1.4404 or 1.4435). With regard to their temperature stability properties, the materials 1.4404 and 1.4435 are grouped under 13E0 in EN 1092-1 Tab. 18. The chemical composition of the two materials can be identical.

Levelflex FMP56. FMP57				
Threaded connection		Flange	No.	Material
G¾, NPT¾	*G1½, NPT1½*			
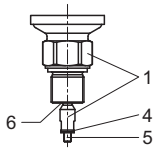 A0013890	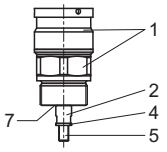 A0013888	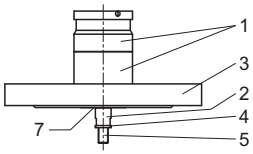 A0013889	1	304 (1.4301)
			2	316L (1.4404)
			3	ASME: 316/316L EN: 316L (1.4404) JIS: 316L (1.4435)
			4	Nordlock washer: 1.4547
			5	1.4462, Duplex CR22
			6	PPS-GF40
			7	PEEK GF30

Levelflex FMP56, FMP57						
Rod probe	**Rope probe**				**No.**	**Material**
Φ 16 mm (2/3")	*Φ 6 mm (1/4")*	*Φ 8 mm (1/3") coated*	*Φ 4 mm (1/6")*	*Φ 6 mm (1/4") coated*		
 A0013891	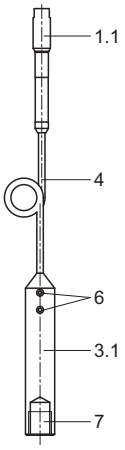 A0013892	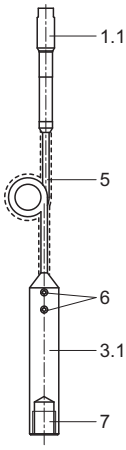 A0013893	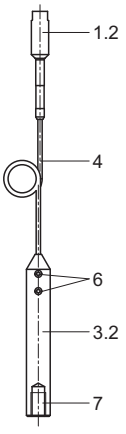 A0013894	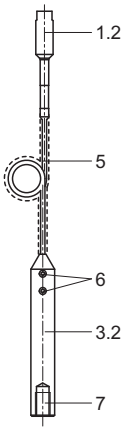 A0013895	1.1	304 (1.4301)
					1.2	316L (1.4404)
					2	316L (1.4404)
					3.1	304 (1.4301)
					3.2	316L (1.4404)
					4	316 (1.4401)
					5	Rope: galvanized steel
						Coating 1 mm (0.04 in): PA 12 (Vestamid L 1940)
					6	Set screw: A4-70
					7	Screw for tightening: A2-70

Materials: Mounting bracket

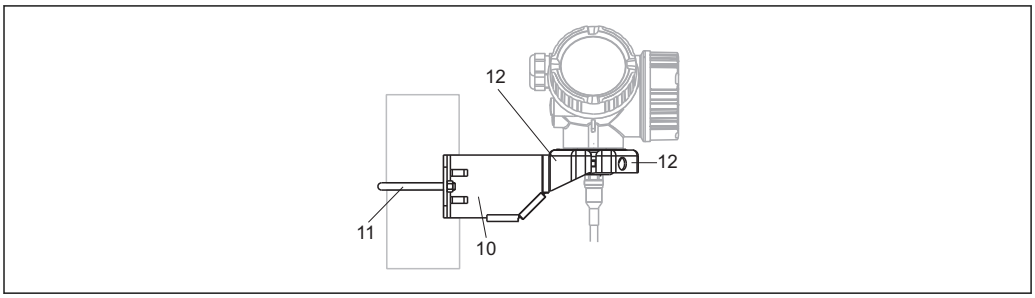

A0015143

Mounting bracket for version "Sensor remote"		
No.	**Component**	**Material**
10	Bracket	316L (1.4404)
11	Bracket	316Ti (1.4571)
	Screw/nuts	A4-70
	Distance sleeves	316Ti (1.4571) or 316L (1.4404)
12	Half-shells	316L (1.4404)

Materials: Adapter and cable for remote display

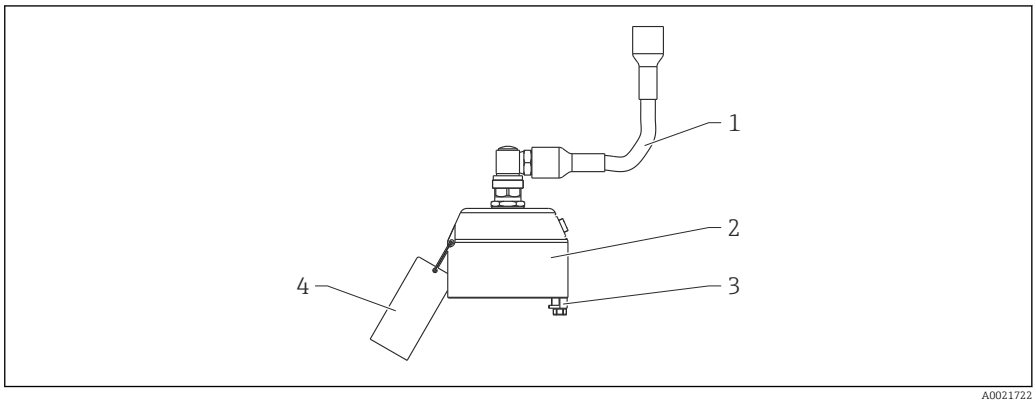

A0021722

Adapter and cable for version "Sensor remote"		
Nr.	**Component**	**Material**
1	Cable	FRNC
2	Sensor adapter	304 (1.4301)
3	Clamp	316L (1.4404)
	Screw	A4-70
4	Loop	316 (1.4401)
	Crimp sleeve	Aluminum
	Nameplate	304 (1.4301)

Materials: Weather protection cover

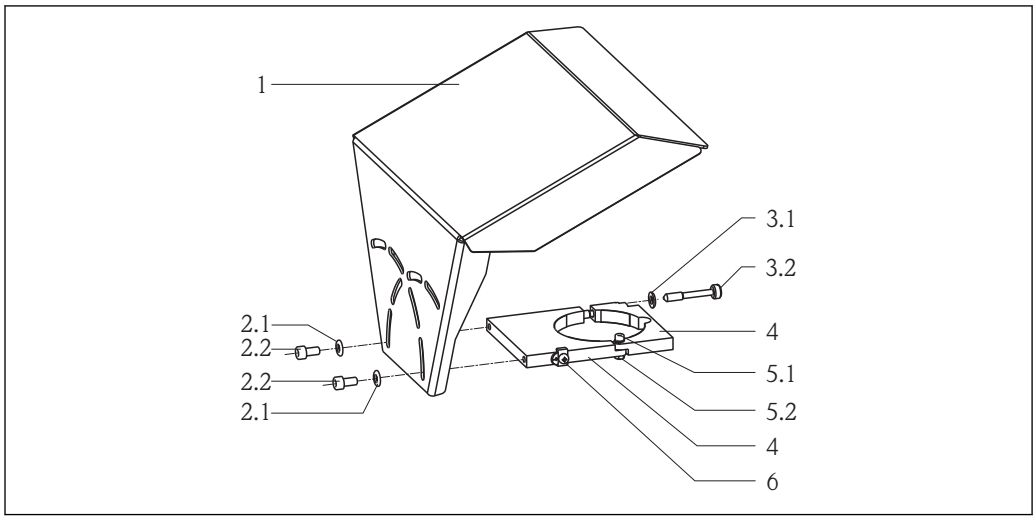

A0015473

Weather protection cover			
Nr.	**Part: material**	**Nr.**	**Part: material**
1	Protection cover: 304 (1.4301)	4	Bracket: 304 (1.4301)
2.1	Washer: A2	5.1	Cheese head screw: A2-70
2.2	Cheese head screw: A4-70	5.2	Nut: A2
3.1	Washer: A2	6	Ground terminal ▪ Screw: A4 ▪ Spring washer: A4 ▪ Clamp: 316L (1.4404) ▪ Holder: 316L (1.4404)
3.2	Tightening screw: 304 (1.4301)		

Operability

Operating concept

Operator-oriented menu structure for user-specific tasks
- Commissioning
- Operation
- Diagnostics
- Expert level

Operatring languages
- English (contained in every device)
- One additional language as ordered (feature 500 of the product structure)

Quick and safe commissioning
- Guided menus ("Make-it-run" wizards) for applications
- Menu guidance with brief explanations of the individual parameter functions

Reliable operation
- Standardized operation at the device and in the operating tools
- Data storage device (HistoROM) for process and measuring device data with event logbook available at all times - even if electronics modules are replaced

Efficient diagnostics increase measurement reliability
- Remedy information is integrated in plain text
- Diverse simulation options and line recorder functions

Local operation

Order code for "Display; Operation", option **C** "SD02"	Order code for "Display; Operation", option **E** "SD03"
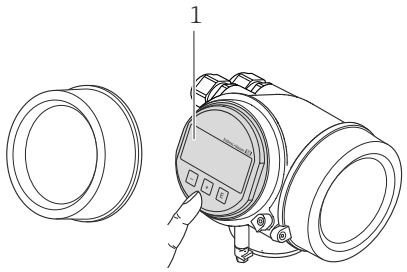	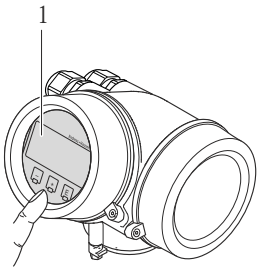
1 Operation with pushbuttons	*1 Operation with touch control*

Display elements
- 4-line display
- In the case of order code for "Display; Operation", option **E**: white background lighting; switches to red in event of device errors
- Format for displaying measured variables and status variables can be individually configured
- Permitted ambient temperature for the display: −20 to +70 °C (−4 to +158 °F)
  The readability of the display may be impaired at temperatures outside the temperature range.

Operating elements
- In the case of order code "Display; Operation", Option **C**: local operation with 3 push buttons (⊕, ⊖, Ⓔ)
- In the case of order code for "Display; Operation", option **E**: external operation via touch control; 3 optical keys: ⊕, ⊖, Ⓔ
- Operating elements also accessible in various hazardous areas

Additional functionality
- Data backup function
  The device configuration can be saved in the display module.
- Data comparison function
  The device configuration saved in the display module can be compared to the current device configuration.
- Data transfer function
  The transmitter configuration can be transmitted to another device using the display module.

Operation with remote display and operating module FHX50

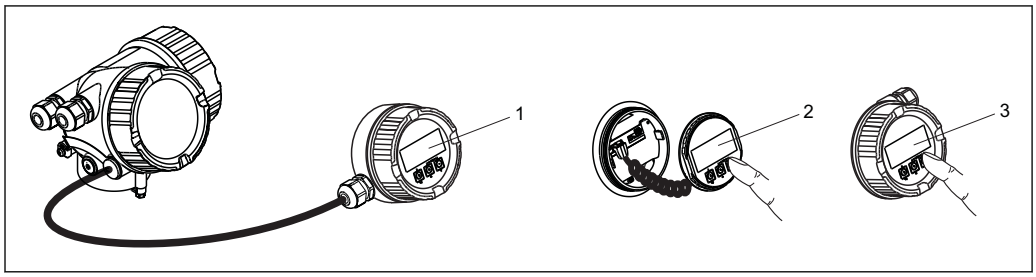

28 FHX50 operating options

1 Housing of the remote display and operating module FHX50
2 Display and operating module SD02, push buttons; cover must be removed
3 Display and operating module SD03, optical keys; can be operated through the glass of the cover

Remote operation

Via HART protocol

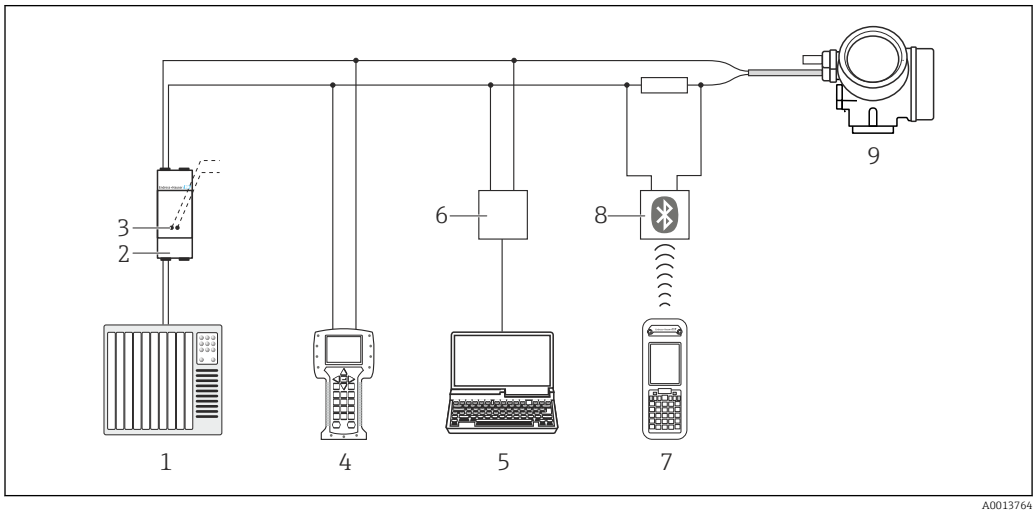

29 Options for remote operation via HART protocol

1 PLC (programmable logic controller)
2 Transmitter power supply unit, e.g. RN221N (with communication resistor)
3 Connection for Commubox FXA191, FXA195 and Field Communicator 375, 475
4 Field Communicator 475
5 Computer with operating tool (e.g. FieldCare, AMS Device Manager, SIMATIC PDM)
6 Commubox FXA191 (RS232) or FXA195 (USB)
7 Field Xpert SFX350/SFX370
8 VIATOR Bluetooth modem with connecting cable
9 Transmitter

Via PROFIBUS PA protocol

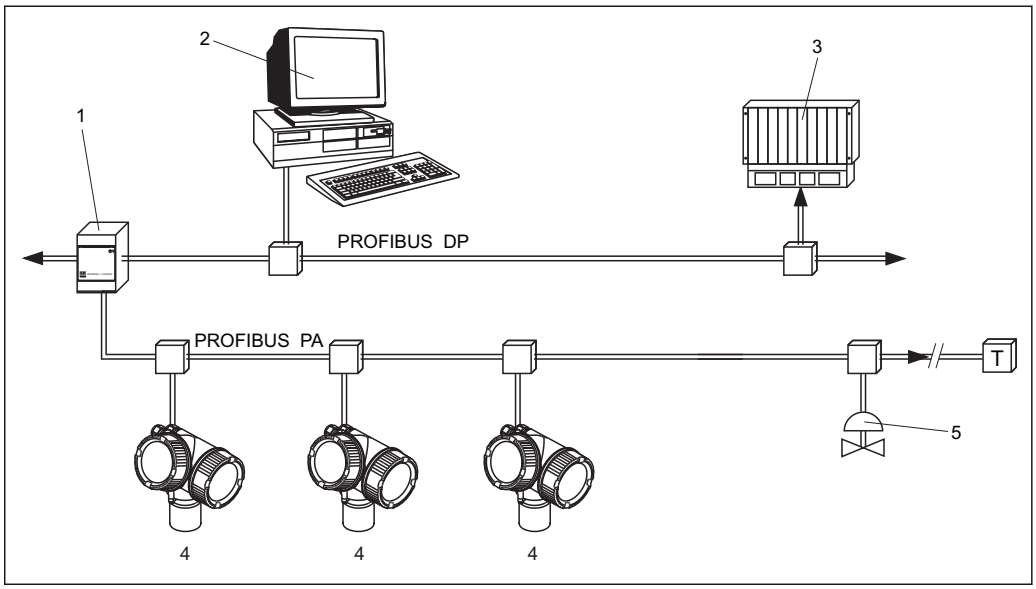

1 Segment coupler
2 Computer with Profiboard/Proficard and operating tool (e.g. FieldCare)
3 PLC (Progrommable Logic Controller)
4 Transmitter
5 Additional functions (valves etc.)

Via FOUNDATION Fieldbus

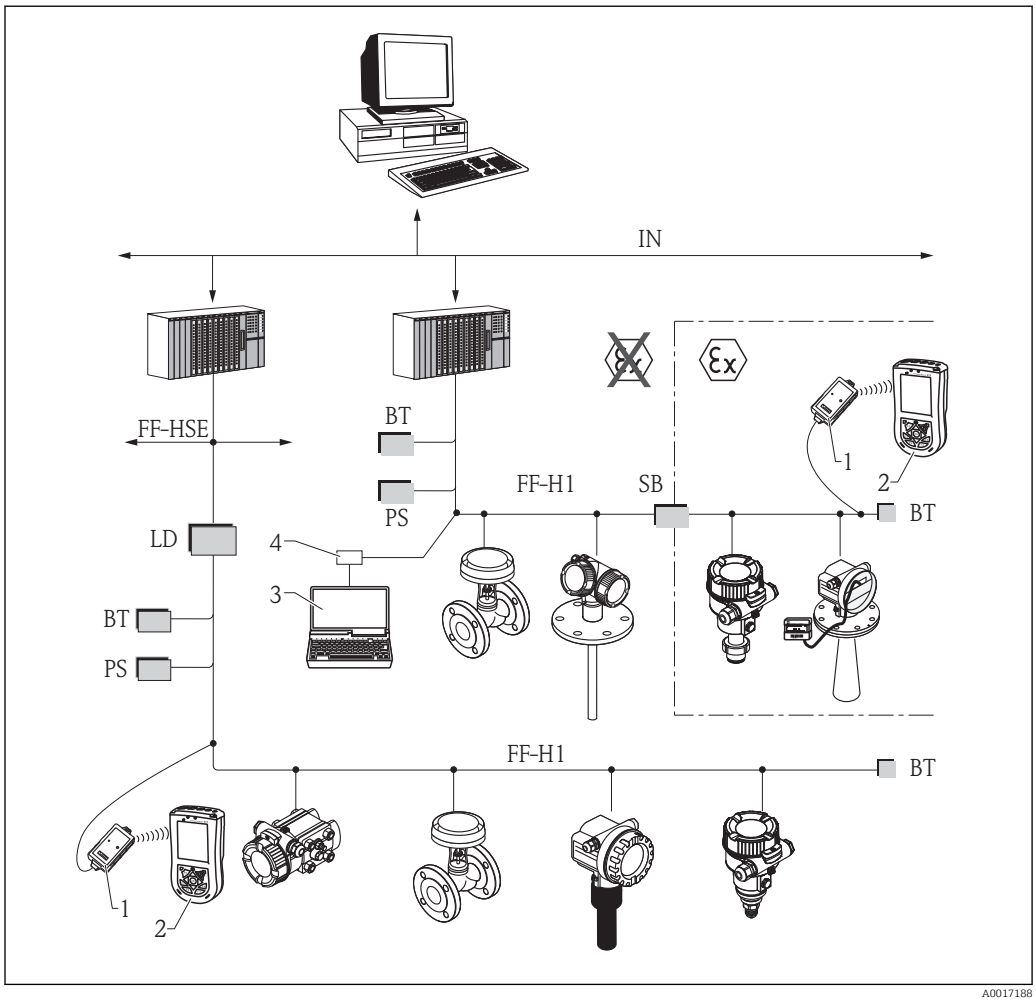

30 FOUNDATION Fieldbus system architecture with associated components

1 FFblue Bluetooth modem
2 Field Xpert SFX350/SFX370
3 FieldCare
4 NI-FF interface card

IN	Industrial network
FF-HSE	High Speed Ethernet
FF-H1	FOUNDATION Fieldbus-H1
LD	Linking Device FF-HSE/FF-H1
PS	Bus Power Supply
SB	Safety Barrier
BT	Bus Terminator

Via service interface (CDI)

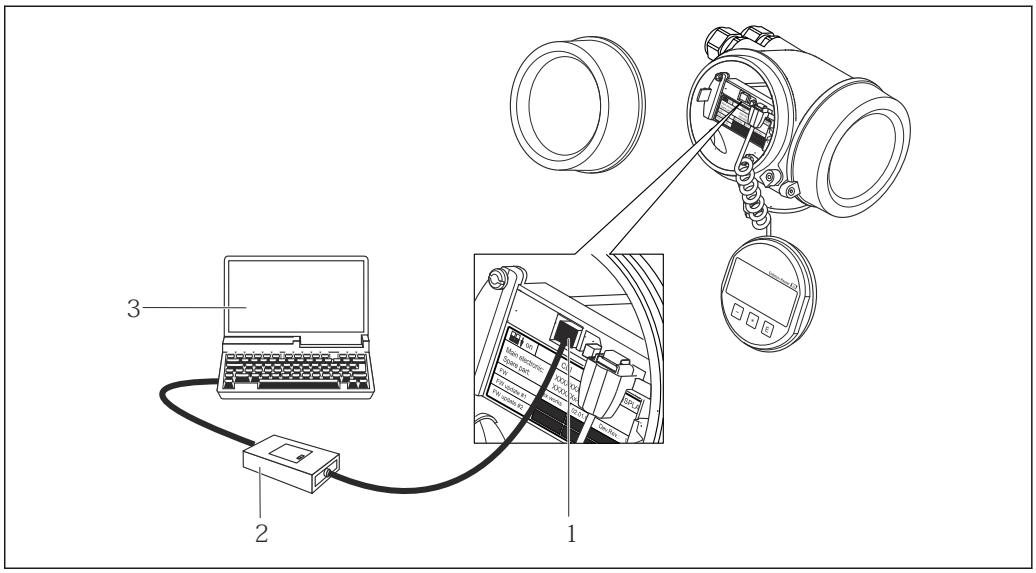

1 Service interface (CDI) of the measuring device (= Endress+Hauser Common Data Interface)
2 Commubox FXA291
3 Computer with "FieldCare" operating tool

System integration via Fieldgate

Vendor Managed Inventory

By using Fieldgates to interrogate tank or silo levels remotely, suppliers of raw materials can provide their regular customers with information about the current supplies at any time and, for example, account for them in their own production planning. For their part, the Fieldgates monitor the configured level limits and, if required, automatically activate the next supply. The spectrum of options here ranges from a simple purchasing requisition via e-mail through to fully automatic order administration by coupling XML data into the planning systems on both sides.

Remote maintenance of measuring equipment

Fieldgates not only transfer the current measured values, they also alert the responsible standby personnel, if required, via e-mail or SMS. In the event of an alarm or also when performing routine checks, service technicians can diagnose and configure connected HART devices remotely. All that is required for this is the corresponding HART operating tool (e.g. FieldCare, ...) for the connected device. Fieldgate passes on the information transparently, so that all options for the respective operating software are available remotely. Some on-site service operations can be avoided by using remote diagnosis and remote configuration and all others can at least be better planned and prepared.

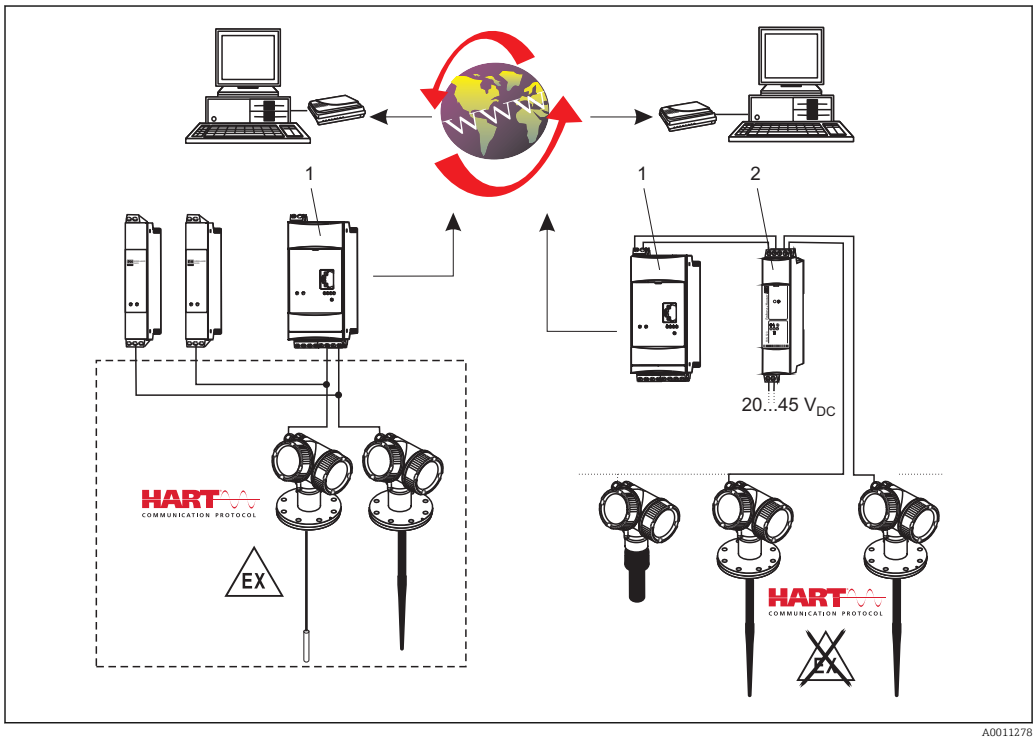

A0011278

31 The complete measuring system consists of devices and:

1 Fieldgate FXA520
2 Multidrop Connector FXN520

The number of instruments which can be connected in mutidrop mode can be calculated by the "FieldNetCalc" program. A description of this program can be found in Technical Information TI 400F (Multidrop Conncector FXN520). The program is available form your Endress+Hauser sales organisation or in the internet at: www.de.endress.com/Download (text search = "Fieldnetcalc").

Certificates and approvals

CE mark

The measuring system meets the legal requirements of the applicable EC guidelines. These are listed in the corresponding EC Declaration of Conformity together with the standards applied.

Endress+Hauser confirms successful testing of the device by affixing to it the CE mark.

C-Tick symbol

The measuring system meets the EMC requirements of the "Australian Communications and Media Authority (ACMA)".

Ex approval

The devices are certified for use in hazardous areas and the relevant safety instructions are provided in the separate "Safety Instructions" (XA) document. Reference is made to this document on the nameplate.

The separate documentation "Safety Instructions" (XA) containing all the relevant explosion protection data is available from your Endress+Hauser Sales Center. Correlation of documentations to the device (→ 🖹 97).

Dual seal according to ANSI/ISA 12.27.01

The devices have been designed according to ANSI/ISA 12.27.01 as dual seal devices, allowing the user to waive the use and save the cost of installing external secondary process seals in the conduit as required by the process sealing sections of ANSI/NFPA 70 (NEC) and CSA 22.1 (CEC). These instruments comply with the North-American installation practice and provide a very safe and cost-saving installation for pressurized applications with hazardous fluids.

Further information can be found in the Safety Instructions (XA) of the relevant devices.

Functional Safety

Used for level monitoring (MIN, MAX, range) up to SIL 3 (homogeneous redundancy), independently assessed by TÜV Rhineland as per IEC 61508. Other information see documentation SD00326F: "Functional Safety Manual".

ASME B31.1 and B31.3

- The dimensions, materials of construction, pressure / temperature ratings and identification markings of the device comply with the requirements of AMSE B31.1 and ASME B31.3
- Declaration of conformity: see product structure, feature 580, option KV.

Marine certificate

- GL (Germanischer Lloyd)
- ABS (American Bureau of Shipping)
- LR (Lloyd's Register)
- DNV (Det Norske Veritas)
- BV (Bureau Veritas)

Only in connection with HART or PROFIBUS PA.

Telecommunications

Complies with part 15 of the FCC rules for an unintentional radiator. All probes meet the requirements for a Class A digital device.

In addition, all probes in metallic tanks as well as the coax probe meet the requirements for a Class B digital device.

CRN-Zulassung

Some device versions have a CRN approval. Devices are CRN approved if the folowing two conditions are met:

- The device has a CSA approval (Product structure: Feature 010 "Approval")
- The device has a CRN approved process connection according to the following table.

Feature 010 of the product structure	Approval
AEJ	1-1/2" 150lbs RF, 316/316L flange ANSI B16.5
AFJ	2" 150lbs RF, 316/316L flange ANSI B16.5
AGJ	3" 150lbs RF, 316/316L flange ANSI B16.5
AHJ	4" 150lbs RF, 316/316L flange ANSI B16.5
AJJ	6" 150lbs RF, 316/316L flange ANSI B16.5
AKJ	8" 150lbs RF, 316/316L flange ANSI B16.5

Feature 010 of the product structure	Approval
GGE	Thread ISO228 G1-1/2, 304
RGE	Thread ANSI MNPT1-1/2, 304

- Process connections without CRN approval are not included in this table.
- Refer to the product structure to see which process connections are available for a specific device type.
- CRN approved devices are marked with the registration number 0F14480.5 on the nameplate.

Track record

FMP5x is the upgrade model of the corresponding FMP4x series.

Other standards and guidelines

- EN 60529
  Degrees of protection by housing (IP code)
- EN 61010-1
  Protection Measures for Electrical Equipment for Measurement, Control, Regulation and Laboratory Procedures.
- IEC/EN 61326
  "Emission in accordance with Class A requirements". Electromagnetic compatibility (EMC requirements)
- NAMUR NE 21
  Electromagnetic compatibility (EMC) of industrial process and laboratory control equipment.
- NAMUR NE 43
  Standardization of the signal level for the breakdown information of digital transmitters with analog output signal.
- NAMUR NE 53
  Software of field devices and signal-processing devices with digital electronics
- NAMUR NE 107
  Status classification as per NE107
- NAMUR NE 131
  Requirements for field devices for standard applications
- IEC61508
  Functional safety of electrical/electronic/programmable electronic safety-related systems

Ordering information

Ordering information

Detailed ordering information is available from the following sources:
- In the Product Configurator on the Endress+Hauser website: www.endress.com → Select country → Instruments → Select device → Product page function: Configure this product
- From your Endress+Hauser Sales Center: www.endress.com/worldwide

Product Configurator - the tool for individual product configuration
- Up-to-the-minute configuration data
- Depending on the device: Direct input of measuring point-specific information such as measuring range or operating language
- Automatic verification of exclusion criteria
- Automatic creation of the order code and its breakdown in PDF or Excel output format
- Ability to order directly in the Endress+Hauser Online Shop

3-point linearity protocol (in preparation)

The following notes must be taken into account if option F3 ("3 point linearity protocol") has been selected in feature 550 ("Calibration").

Depending on the probe the 3 points of the linearity protocol are defined as follows:

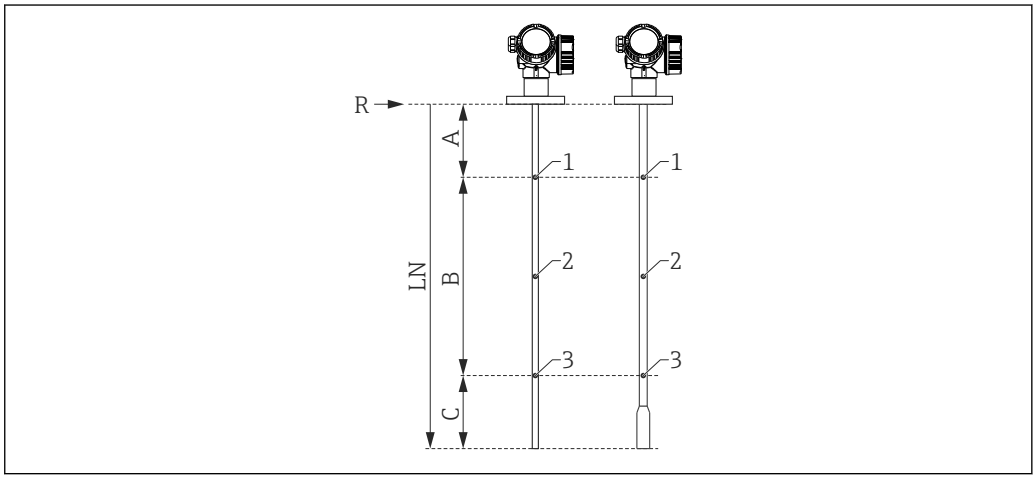

A Distance from reference point R to first measuring point
B Measuring range
C Distance from end of probe to third measuring point
LN Length of probe
R Reference point of the measurement
1 First measuring point
2 Second measuring point (centrally between first and third measuring point)
3 Third measuring point

	Rod probe	**Rope probe** **LN ≤ 6 m (20 ft)**	**Rope probe** **LN > 6 m (20 ft)**
Position of 1st measuring point	A = 350 mm (13.8 in)	A = 350 mm (13.8 in)	A = 350 mm (13.8 in)
Position of 2nd measuring point	centrally between 1st and 3rd measuring point	centrally between 1st and 3rd measuring point	centrally between 1st and 3rd measuring point
Position of 3rd measuring point	C = 250 mm (9.84 in)	C = 500 mm (19.7 in)	A+B = 5 500 mm (217 in)
Minimum measuring range	B ≥ 400 mm (15.7 in)	B ≥ 400 mm (15.7 in)	B ≥ 400 mm (15.7 in)
Minimum length of probe	LN ≥ 1 000 mm (39.4 in)	LN ≥ 1 250 mm (49.2 in)	LN ≥ 1 250 mm (49.2 in)

The position of the measuring points may vary by ±1 cm (±0.04 in).

The linearity check is performed with the complete device and under reference conditions.

5-point linearity protocol

The following notes must be taken into account if option F4 ("5 point linearity protocol") has been selected in feature 550 ("Calibration").

The five points of the linearity protocol are evenly distributetd across the measuring range (0% to 100%). In order to define the measuring range, **Empty calibration** (E) and **Full calibration** (F) have to be specified [9].

The following restrictions have to be taken into account when defining E and F:

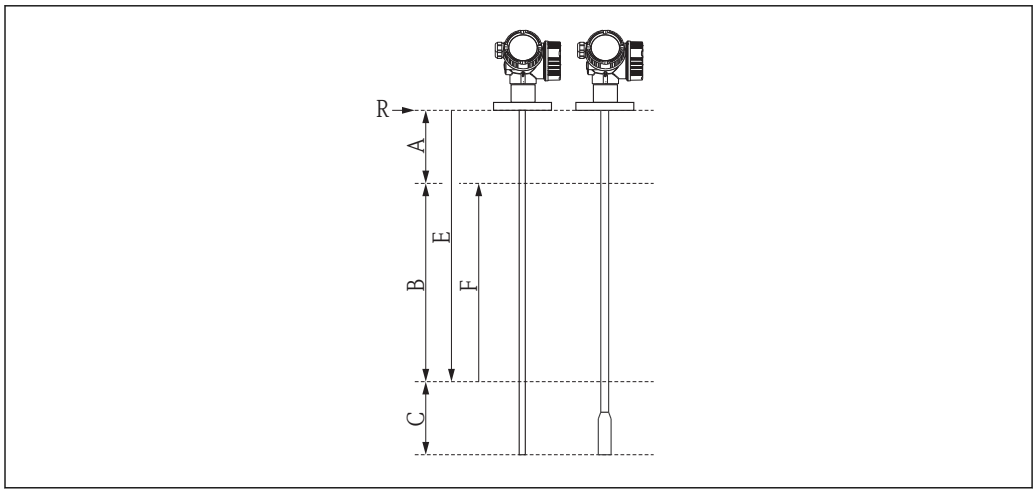

A0014673

Sensor	Minimum distance between reference point (R) and 100% level	Minimum measuring range
FMP56 FMP57	A ≥ 250 mm (10 in)	B ≥ 400 mm (16 in)

Type of probe	Minimum distance from end of probe to 0% level	Maximum value for "empty calibration"
Rod	C ≥ 100 mm (4 in)	E ≤ 3.9 m (12.8 ft)
Rope, FMP56	C ≥ 1 000 mm (40 in)	E ≤ 11 m (36 ft)
Rope, FMP57	C ≥ 1 000 mm (40 in)	E ≤ 23 m (75 ft)

The linearity check is performed with the complete device and under reference conditions.

The selected values of **Empty calibration** and **Full calibration** are only used to record the linearity protocol and are reset to their probe specific default values thereafter. If values different from the default are required, they must be ordered as a customized parametrization (→ 🖹 87).

9) If E and F are not specified, probe dependent default values will be used instead.

Customized parametrization

If the option IJ "Customized parametrization HART", IK "Customized parametrization PA" or IL "Customized parametrization FF" has been selected in feature 570 "Service", customer specific presettings can be selected for the following parameters:

Parameter	Communication	Selection list / range of values
Setup → Distance unit	▪ HART ▪ PA ▪ FF	▪ in ▪ mm
Setup → Empty calibration	▪ HART ▪ PA ▪ FF	0 to 45 m (0 to 147 ft) [1]
Setup → Full calibration	▪ HART ▪ PA ▪ FF	0 to 45 m (0 to 147 ft) [1]
Setup → Adv. Setup → Current output 1/2 → Damping	HART	0 to 999.9 s
Setup → Adv. Setup → Current output 1/2 → Failure mode	HART	▪ Min ▪ Max ▪ Last valid value
Setup → Adv. Setup → Current output 1/2 → Burst mode	HART	▪ Off ▪ On

1) For FMP56: max. 12 m (36 ft)

Accessories

Device-specific accessories

Weather protection cover

Accessory	Description
Weather protection cover	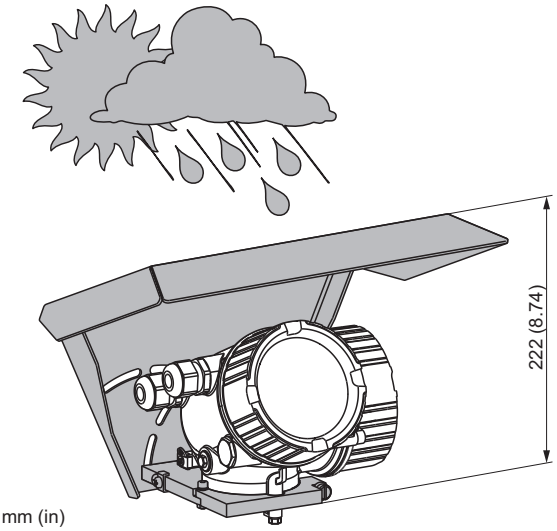 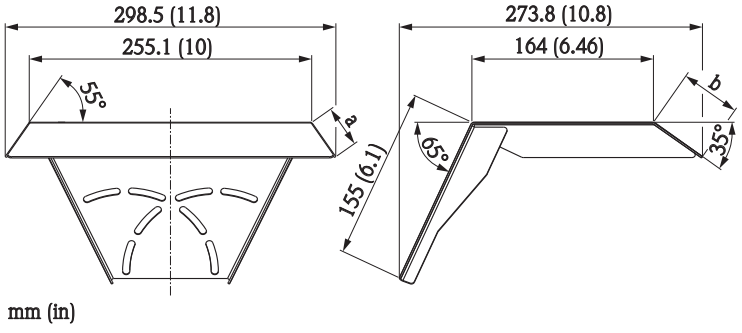 *a* *37.8 mm (1.49 in)* *b* *54 mm (2.13 in)* The weather protection cover can be ordered together with the device (product structure, feature 620 "Accessory Enclosed", option PB "Weather Protection Cover"). Alternatively, it can be separately ordered as an accessory; order code 71132889.

Mounting bracket for the electronics housing

Accessory	Description
Mounting bracket for the electronics housing	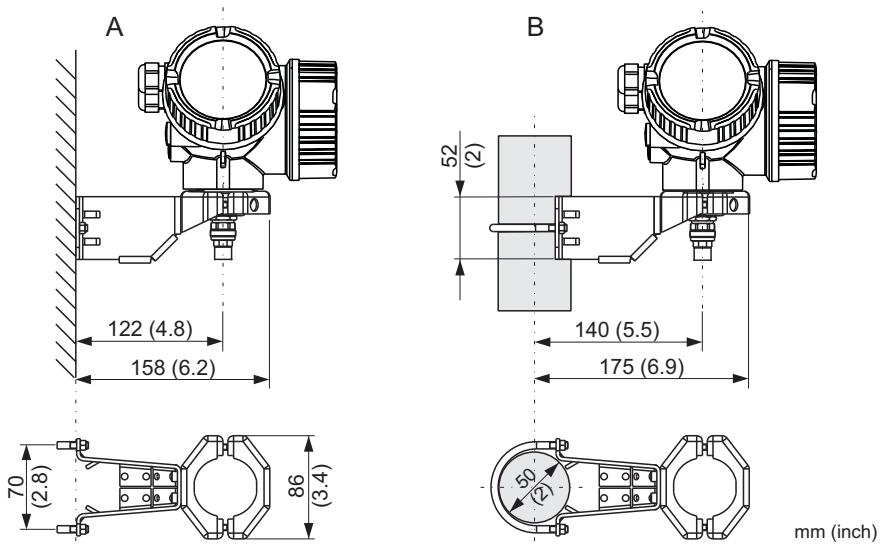 *A* *Wall mounting* *B* *Pipe mounting* For the "Sensor remote" device version (see feature 060 of the product structure), the mounting bracket is part of the delivery. If required, it can also be ordered as an accessory (order code 71102216).

Extension rod / centering HMP40

Accessory	Description
Extension rod / centering HMP40 ▪ can be used for: FMP57 ▪ Admissible temperature at lower nozzle edge: – without center washer: no limitation – with center washer: -40 to 150 °C (-40 to 302 °F) ▪ Additional information: SD01002F	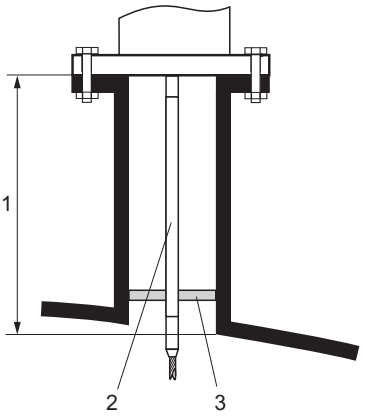 A0013597 *1 Nozzle height* *2 Extension rod* *3 Center washer*

010	**Approval:**
A	A: Non-hazardous area
M	M: FM DIP Cl.II Div.1 Gr.E-G N.I., zone 21,22
P	P: CSA DIP Cl.II Div.1 Gr.G + coal dust N.I.
S	S: FM Cl.I, II, III Div.1 Gr.A-G N.I., zone 0,1,2,20,21,22
U	U: CSA Cl.I, II, III Div.1 Gr.A-G N.I., zone 0,1,2
1	1: ATEX II 1G
2	2: ATEX II 1D
020	**Extension rod; nozzle height:**
1	115mm; 150-250mm / 6-10"
2	215mm; 250-350mm / 10-14"
3	315mm; 350-450mm / 14-18"
4	415mm; 450-550mm / 18-22"
9	Special version, TSP-no. to be spec.
030	**Center washer:**
A	Not selected
B	DN40 / 1-1/2", inside-d. = 40-45mm, PPS
C	DN50 / 2", inside-d. = 50-57mm, PPS
D	DN80 / 3", inside-d. = 80-85mm, PPS
E	DN80 / 3", inside-d. = 76-78mm, PPS
G	DN100 / 4", inside-d. = 100-110mm, PPS
H	DN150 / 6", inside-d. = 152-164mm, PPS
J	DN200 / 8", inside-d. = 210-215mm, PPS
K	DN250 / 10", inside-d. = 253-269mm, PPS
Y	Special version, TSP-no. to be spec.

Mounting kit, isolated

Accessory	Description
Mounting kit, isolated can be used for ▪ FMP50 ▪ FMP51 ▪ FMP54 ▪ FMP56 ▪ FMP57	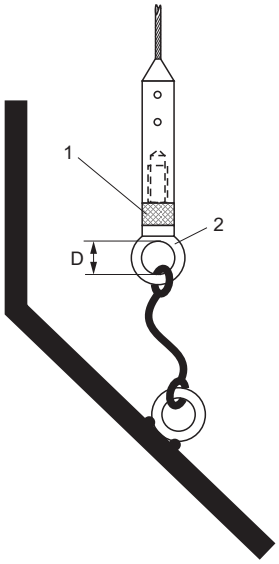 A0013586 *32 Scope of supply of the mounting kit:* *1 Insulating sleeve* *2 Eye-bolt* For reliably insulated fixing of the probe. Maximum process temperature: 150 °C (300 °F) For rope probes 4 mm (⅙ in) or 6 mm (1/4 in) with PA>steel: ▪ Eye-bolt M8 DIN 580 ▪ Diameter D = 20 mm (0.8 in) ▪ Order-No.: 52014249 For rope probes 6 mm (¼ in) or 8 mm (1/3 in) with PA>steel: ▪ Eye-bolt M10 DIN 580 ▪ Diameter D = 25 mm (1 in) ▪ Order-No.: 52014250 Due to the risk of electrostatic charge, the insulating sleeve is not suitable for use in hazardous areas. In these cases the fixing must be reliably grounded. The mounting kit can also be ordered directly with the device (see the Levelflex product structure, feature 620 "Accessory Enclosed", option PG "Mounting kit, isolated, rope").

Remote display FHX50

Accessory	Description
Remote display FHX50	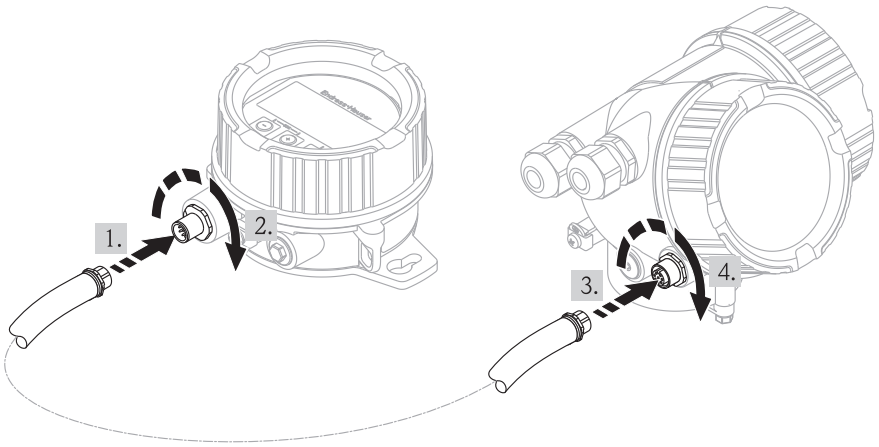 A0019128 ▪ Material: – Plastics PBT – 316L ▪ Ingress protection: IP68 / NEMA 6P and IP66 / NEMA 4x ▪ Suitable for the display modules: – SD02 (push buttons) – SD03 (touch control) ▪ Connection cable: – Cable with M12 plug; supplied with the FHX50; up to 30 m (98 ft) – Customer supplied standard cable; up to 60 m (196 ft) ▪ Ambient temperature: −40 to 80 °C (−40 to 176 °F) ▪ If the remote display is to be used, the Levelflex must be ordered in the version "Prepared for display FHX50" (feature 030, option L or M). For the FHX50, on the other hand, the option A: "Prepared for display FHX50" has to be selected in feature 050: "Option Measurement Device". ▪ If a Levelflex has not been ordered in the version "Prepared for display FHX50", but is nevertheless to be equipped with an FHX50, it is essential to select the option B: "Not prepared for display FHX50" in feature 050: "Option Measurement Device" of the FHX50. In this case, a retrofit kit, needed to prepare the Levelflex for the remote display, is supplied together with the FHX50. For transmitters with approval, application of the FHX50 may be restricted. A device may only be retrofitted with the FHX50 if option L or M ("Prepared for FHX50") is quoted under *Basic specifications*, position 4 "Display, operation" in the associated Safety Instructions (XA). In addition to this, observe the Safety Instructions (XA) of the FHX50. Do not retrofit transmitters with: ▪ approval for use in areas with combustible dusts (Dust-Ex approval) ▪ type of protection Ex nA For details refer to the document SD01007F.

Overvoltage protection

Accessory	Description
Overvoltage protection for 2-wire-devices OVP10 (1 channel) OVP20 (2 channel)	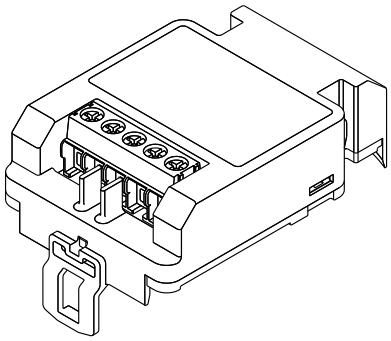 A0021734 **Technical data** ▪ Resistance per channel: 2 * 0.5 Ω_{max} ▪ Threshold DC voltage: 400 to 700 V ▪ Threshold impulse voltage: < 800 V ▪ Capacitance at 1 MHz: < 1.5 pF ▪ Nominal arrest impulse voltage (8/20 µs): 10 kA ▪ Suited for wire cross-sections: 0.2 to 2.5 mm² (24 to 14 AWG) **Ordering with device** The overvoltage protection module is preferably ordered with the device. See product structure, feature 610 "Accessory mounted", option NA "Overvoltage protection". Separate ordering of the module is only necessary if a device is to retrofitted with the overvoltage protection. **Order code for retrofitting** ▪ For 1-channel devices (feature 020, option A) OVP10: 71128617 ▪ For 2-channel devices (feature 020, option B, C, E or G) OVP20 : 71128619 **Hosuing lid for retrofitting** In order to keep the necessary safety distances, the housing lid needs to be replaced if the device is retrofitted with the overvoltage protection. Depending on the housing type, the order code of the suitable lid is as follows: ▪ GT18 housing: Lid 71185516 ▪ GT19 housing: Lid 71185518 ▪ GT20 housing: Lid 71185516 **Restrictions for retrofitting** Depending on the approval of the transmitter the usage of the OVP module may be restricted. A device may only be retrofitted with an OVP module if the option *NA* (overvoltage protection) is quoted unter *Optional Specifications* in the Safety Instructions (XA) pertaining to the device. For details refer to SD01090F.

Communication-specific accessories

Accessory	Description
Commubox FXA195 HART	For intrinsically safe HART communication with FieldCare via the USB interface. For details refer to Technical Information TI00404F

Accessory	Description
Commubox FXA291	Connects Endress+Hauser field devices with CDI interface (= Endress+Hauser Common Data Interface) to the USB interface of a computer. For details refer to Technical Information TI00405C

Accessory	Description
HART Loop Converter HMX50	Evaluates the dynamic HART variables and converts them to analog current signals or limit values. For details refer to Technical Information TI00429F and Operating Instructions BA00371F

Accessory	Description
WirelessHART Adapter SWA70	Connects field devices to a WirelessHART network. The WirelessHART adapter can be mounted directly at a HART device and is easly integrated into an existing HART network. It ensures safe data transmission and can be operated in parallel with other wireless networks. For details refer to Operating Instructions BA00061S

Accessory	Description
Fieldgate FXA320	Gateway for remote monitoring of connected 4-20mA measuring devices via web browser. For details refer to Technical Information TI00025S and Operating Instructions BA00053S

Accessory	Description
Fieldgate FXA520	Gateway for remote diagnosis and parametrization of connected HART measuring devices via web browser. For details refer to Technical Information TI00025S and Operating Instructions BA00051S

Accessory	Description
Field Xpert SFX350	Field Xpert SFX350 is a mobile computer for commissioning and maintenance. It enables efficient device configuration and diagnostics for HART and FOUNDATION fieldbus devices in the **non-Ex area**. For details, see Operating Instructions BA01202S

Accessory	Description
Field Xpert SFX370	Field Xpert SFX370 is a mobile computer for commissioning and maintenance. It enables efficient device configuration and diagnostics for HART and FOUNDATION fieldbus devices in the **non-Ex area** and the **Ex area**. For details, see Operating Instructions BA01202S

Service-specific accessories

Accessory	Description
FieldCare	Endress+Hauser's FDT-based Plant Asset Management tool. Helps to configure and maintain all field devices of your plant. By supplying status information it also supports the diagnosis of the devices. For details refer to Operating Instructions BA00027S and BA00059S.

System components

Accessory	Description
Graphic Data Manager Memograph M	The graphic data manager Memograph M provides information on all the relevant process variables. Measured values are recorded correctly, limit values are monitored and measuring points analyzed. The data are stored in the 256 MB internal memory and also on an SD card or USB stick. For details refer to Technical Information TI00133R and Operating Instructions BA00247R
RN221N	Active barrier with power supply for safe separation of 4 to 20 mA current circuits. Provides bi-directional HART transmission. For details refer to Technical Information TI00073R and Operating Instructions BA00202R
RNS221	Transmitter supply for 2-wire sensors or transmitters exclusively for non-Ex areas. Provides bi-directional communication using the HART communication sockets. For details refer to Technical Information TI00081R and Operating Instructions KA00110R

Documentation

For an overview of the scope of the associated Technical Documentation, refer to the following:
- The *W@M Device Viewer* : Enter the serial number from the nameplate (www.endress.com/deviceviewer)
- The *Endress+Hauser Operations App*: Enter the serial number from the nameplate or scan the 2-D matrix code (QR code) on the nameplate.

Standard documentation

Levelflex FMP56, FMP57

Correlation of documentations to the device:

Device	Power supply, output	Communication	Document type	Document code
FMP56, FMP57	A, B, C, K, L	HART	Technical Information	TI01004F
			Operating Instructions	BA01004F
			Brief Operating Instructions	KA01061F
			Description of Device Parameters	GP01000F
	G	PROFIBUS PA	Technical Information	TI01004F
			Operating Instructions	BA01009F
			Brief Operating Instructions	KA01073F
			Description of Device Parameters	GP01001F
	E	FOUNDATION Fieldbus	Technical Information	TI01004F
			Operating Instructions	BA01055F
			Brief Operating Instructions	KA01110F
			Description of Device Parameters	GP01015F

Supplementary documentation

Device	Document type	Document code
Fieldgate FXA520	Technical Information	TI369F
Tank Side Monitor NRF590	Technical Information	TI402F
	Operating Instructions	BA256F
	Description of Device Parameters	BA257F

Description	Document type	Document code
Continuous level measurement in liquids and bulk solids Selection and engineering guide for the process industry	Competence brochure	CP00023F

Safety documentation

Safety Instructions (XA)

Depending on the approval, the following Safety Instructions (XA) are supplied with the device. They are an integral part of the Operating Instructions.

Feature 010	Approval	Available for	Feature 020: "Power Supply; Output"				
			A [1]	B [2]	C [3]	E [4]/G [5]	K [6]/L [7]
BA	ATEX II 1G Ex ia IIC T6 Ga	▪ FMP56 ▪ FMP57	XA00496F	XA01125F	XA01126F	XA00516F	-
BB	ATEX II 1/2G Ex ia IIC T6 Ga/Gb	▪ FMP56 ▪ FMP57	XA00496F	XA01125F	XA01126F	XA00516F	-
BE	ATEX II 1D Ex t IIIC Da	▪ FMP56 ▪ FMP57	XA00501F	XA00501F	XA00501F	XA00521F	XA00501F
BF	ATEX II 1/2D Ex t IIIC Da/Db	▪ FMP56 ▪ FMP57	XA00501F	XA00501F	XA00501F	XA00521F	XA00501F
BG	ATEX II 3G Ex nA IIC T6 Gc	▪ FMP56 ▪ FMP57	XA00498F	XA01130F	XA01131F	XA00518F	XA01132F
BH	ATEX II 3G Ex ic IIC T6 Gc	▪ FMP56 ▪ FMP57	XA00498F	XA01130F	XA01131F	XA00518F	XA01132F
BL	ATEX II 1/3G Ex nA[ia] IIC T6 Ga/Gc	▪ FMP56 ▪ FMP57	XA00497F	XA01127F	XA01128F	XA00517F	XA01129F
B2	ATEX II 1/2G Ex ia IIC T6 Ga/Gb, 1/2D Ex ia IIIC Da/Db	▪ FMP56 ▪ FMP57	XA00502F	XA00502F	XA00502F	XA00522F	-
B3	ATEX II 1/2G Ex d[ia] IIC T6 Ga/Gb, 1/2 D Ex t IIIC Da/Db	▪ FMP56 ▪ FMP57	XA00503F	XA00503F	XA00503F	XA00523F	XA01136F
CD	CSA C/US DIP Cl.II,III Div.1 Gr.E-G	▪ FMP56 ▪ FMP57	XA00529F	XA00529F	XA00529F	XA00570F	XA00529F
C2	CSA C/US IS Cl.I,II,III Div.1 Gr.A-G, NI Cl.1 Div.2, Ex ia	▪ FMP56 ▪ FMP57	XA00530F	XA00530F	XA00530F	XA00571F	XA00530F
C3	CSA C/US XP Cl.I,II,III Div.1 Gr.A-G, NI Cl.1 Div.2, Ex d	▪ FMP56 ▪ FMP57	XA00529F	XA00529F	XA00529F	XA00570F	XA00529F
FB	FM IS Cl.I,II,III Div.1 Gr.A-G, AEx ia, NI Cl.1 Div.2	▪ FMP56 ▪ FMP57	XA00531F	XA00531F	XA00531F	XA00573F	XA00531F
FD	FM XP Cl.I,II,III Div.1 Gr.A-G, AEx d, NI Cl.1 Div.2	▪ FMP56 ▪ FMP57	XA00532F	XA00532F	XA00532F	XA00572F	XA00532F
FE	FM DIP Cl.II,III Div.1 Gr.E-G	▪ FMP56 ▪ FMP57	XA00532F	XA00532F	XA00532F	XA00572F	XA00532F
IA	IEC Ex ia IIC T6 Ga	▪ FMP56 ▪ FMP57	XA00496F	XA01125F	XA01126F	XA00516F	-
IB	IEC Ex ia IIC T6 Ga/Gb	▪ FMP56 ▪ FMP57	XA00496F	XA01125F	XA01126F	XA00516F	-
IE	IEC Ex t IIIC Da	▪ FMP56 ▪ FMP57	XA00501F	XA00501F	XA00501F	XA00521F	XA00501F
IF	IEC Ex t IIIC Da/Db	▪ FMP56 ▪ FMP57	XA00501F	XA00501F	XA00501F	XA00521F	XA00501F
IG	IEC Ex nA IIC T6 Gc	▪ FMP56 ▪ FMP57	XA00498F	XA01130F	XA01131F	XA00518F	XA01132F
IH	IEC Ex ic IIC T6 Gc	▪ FMP56 ▪ FMP57	XA00498F	XA01130F	XA01131F	XA00518F	XA01132F
IL	IEC Ex nA[ia] IIC T6 Ga/Gc	▪ FMP56 ▪ FMP57	XA00497F	XA01127F	XA01128F	XA00517F	XA01129F
I2	IEC Ex ia IIC T6 Ga/Gb, Ex ia IIIC Da/Db	▪ FMP56 ▪ FMP57	XA00502F	XA00502F	XA00502F	XA00522F	-
I3	IEC Ex d [ia] IIC T6 Ga/Gb, Ex t IIIC Da/Db	▪ FMP56 ▪ FMP57	XA00503F	XA00503F	XA00503F	XA00523F	XA01136F

Feature 010	Approval	Available for	Feature 020: "Power Supply; Output"				
			A [1]	B [2]	C [3]	E [4]/G [5]	K [6]/L [7]
KA	KC Ex ia IIC T6 Ga	▪ FMP56 ▪ FMP57	XA01169F	-	XA01169F	-	-
KB	KC Ex ia IIC T6 Ga/Gb	▪ FMP56 ▪ FMP57	XA01169F	-	XA01169F	-	-
MA	INMETRO Ex ia IIC T6 Ga	▪ FMP56 ▪ FMP57	XA01038F	XA01038F	XA01038F	-	XA01038F
ME	INMETRO Ex t IIIC Da	▪ FMP56 ▪ FMP57	XA01043F	XA01043F	XA01043F	-	XA01043F
MH	INMETRO Ex ic IIC T6 Gc	▪ FMP56 ▪ FMP57	XA01040F	XA01040F	XA01040F	-	XA01040F
NA	NEPSI Ex ia IIC T6 Ga	▪ FMP56 ▪ FMP57	XA00634F	XA00634F	XA00634F	XA00640F	XA00634F
NB	NEPSI Ex ia IIC T6 Ga/Gb	▪ FMP56 ▪ FMP57	XA00634F	XA00634F	XA00634F	XA00640F	XA00634F
NF	NEPSI DIP A20/21 T85...90oC IP66	▪ FMP56 ▪ FMP57	XA00637F	XA00637F	XA00637F	XA00643F	XA00637F
NG	NEPSI Ex nA II T6 Gc	▪ FMP56 ▪ FMP57	XA00635F	XA00635F	XA00635F	XA00641F	XA00635F
NH	NEPSI Ex ic IIC T6 Gc	▪ FMP56 ▪ FMP57	XA00635F	XA00635F	XA00635F	XA00641F	XA00635F
N2	NEPSI Ex ia IIC T6 Ga/Gb, Ex iaD 20/21 T85...90°C	▪ FMP56 ▪ FMP57	XA00638F	XA00638F	XA00638F	XA00644F	XA00638F
N3	NEPSI Ex d[ia] IIC T6 Ga/Gb, DIP A20/21 T85...90°C IP66	▪ FMP56 ▪ FMP57	XA00639F	XA00639F	XA00639F	XA00645F	XA00639F
8A	FM/CSA IS+XP Cl.I,II,III Div.1 Gr.A-G	▪ FMP56 ▪ FMP57	XA00531F XA00532F	XA00531F XA00532F	XA00531F XA00532F	XA00572F XA00573F	XA00531F XA00532F

1) A: 2-wire; 4-20mA HART
2) B: 2-wire; 4-20mA HART, switch output
3) C: 2-wire; 4-20mA HART, 4-20mA
4) E: 2-wire; FOUNDATION Fieldbus, switch output
5) G: 2-wire; PROFIBUS PA, switch output
6) K: 4-wire 90-253VAC; 4-20mA HART
7) L: 4-wire 10,4-48VDC; 4-20mA HART

For certified devices the relevant Safety Instructions (XA) are indicated on the nameplate.

Ex-marking in case of connected FHX50 remote display

If the device is prepared for the remote display FHX50 (product structure: feature 030: Display, Operation", option L or M), the Ex marking of some certificates changes according to the following table [10]:

Feature 010 ("Approval")	Feature 030 ("Display, Operation")	Ex-marking
BE	L or M	ATEX II 1D Ex ta [ia] IIIC T_{500} xx°C Da
BF	L or M	ATEX II 1/2 D Ex ta [ia Db] IIIC Txx°C Da/Db
BG	L or M	ATEX II 3G Ex nA [ia Ga] IIC T6 Gc
BH	L or M	ATEX II 3G Ex ic [ia Ga] IIC T6 Gc
B3	L or M	ATEX II 1/2G Ex d [ia] IIC T6 Ga/Gb, ATEX II 1/2D Ex ta [ia Db] IIIC Txx°C Da/Db
IE	L or M	IECEx Ex ta [ia] IIIC T500 xx°C Da
IF	L or M	IECEx ta [ia Db] IIIC Txx°C Da/Db
IG	L or M	IECEx Ex nA [ia Ga] IIC T6 Gc
IH	L or M	IECEx Ex ic [ia Ga] IIC T6 Gc
I3	L or M	IECEx Ex d [ia] IIC T6 Ga/Gb, IECEx Ex ta [ia Db] IIIC Txx°C Da/Db

10) The marking of certificates not mentioned in this table are not affected by the FHX50.

Registered trademarks

HART®
Registered trademark of the HART Communication Foundation, Austin, USA

PROFIBUS®
Registered trademark of the PROFIBUS User Organization, Karlsruhe, Germany

FOUNDATION™ Fieldbus
Registered trademark of the Fieldbus Foundation, Austin, Texas, USA

KALREZ®, VITON®
Registered trademark of DuPont Performance Elastomers L.L.C., Wilmington, USA

TEFLON®
Registered trademark of E.I. DuPont de Nemours & Co., Wilmington, USA

TRI CLAMP®
Registered trademark of Alfa Laval Inc., Kenosha, USA

Patents

This product may be protected by at least one of the following patents.

Further patents are pending.

US Patents	EP Patents
5.827.985	---
5.884.231	---
5.973.637	---
6.087.978	955 527
6.140.940	---
6.481.276	---
6.512.358	1 301 914
6.559.657	1 020 735
6.640.628	---
6.691.570	---
6.847.214	---
7.441.454	---
7.477.059	---
---	1 389 337
7.965.087	---



www.addresses.endress.com

Endress+Hauser

People for Process Automation