KA01061F/00/EN/15.13
71226747

Brief Operating Instructions
Levelflex FMP56, FMP57 HART

Guided Level Radar

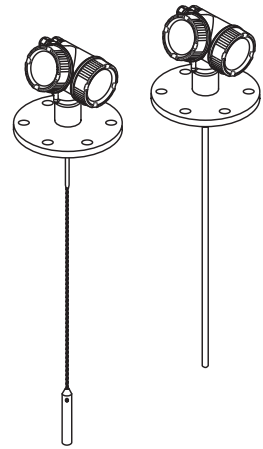

These Instructions are Brief Operating Instructions; they are not a substitute for the Operating Instructions pertaining to the device.

Detailed information about the device can be found in the Operating Instructions and the other documentation:
Available for all device versions via:
– Internet: www.endress.com/deviceviewer
– Smart phone/tablet: *Endress+Hauser Operations App*

Description of the procedure (→ 12)

Endress+Hauser
People for Process Automation

Table of contents

1 Important document information ... 3
1.1 Symbols ... 3

2 Basic safety instructions ... 6
2.1 Requirements for the personnel ... 6
2.2 Designated use ... 6
2.3 Workplace safety ... 7
2.4 Operational safety ... 7
2.5 Product safety ... 7

3 Product description ... 8
3.1 Design ... 8

4 Incoming acceptance and product identification ... 10
4.1 Incoming acceptance ... 10
4.2 Product identification ... 11
4.3 Device documentation ... 12

5 Storage, Transport ... 13
5.1 Storage conditions ... 13
5.2 Transport product to the measuring point ... 13

6 Mounting ... 14
6.1 Mounting requirements ... 14
6.2 Mounting the device ... 24
6.3 Post-installation check ... 35

7 Electrical connection ... 36
7.1 Connection conditions ... 36
7.2 Connecting the device ... 54
7.3 Post-connection check ... 57

8 Commissioning (via operating menu) ... 58
8.1 Display and operating module ... 58
8.2 Operating menu ... 61
8.3 Unlock the device ... 62
8.4 Setting the operating language ... 62
8.5 Configuration of a level measurement ... 63
8.6 User-specific applications ... 65

1 Important document information

1.1 Symbols

1.1.1 Safety symbols

Symbol	Meaning
 A0011189-EN	**DANGER!** This symbol alerts you to a dangerous situation. Failure to avoid this situation will result in serious or fatal injury.
 A0011190-EN	**WARNING!** This symbol alerts you to a dangerous situation. Failure to avoid this situation can result in serious or fatal injury.
 A0011191-EN	**CAUTION!** This symbol alerts you to a dangerous situation. Failure to avoid this situation can result in minor or medium injury.
 A0011192-EN	**NOTICE!** This symbol contains information on procedures and other facts which do not result in personal injury.

1.1.2 Electrical symbols

Symbol	Meaning
 A0011197	**Direct current** A terminal to which DC voltage is applied or through which direct current flows.
 A0011198	**Alternating current** A terminal to which alternating voltage is applied or through which alternating current flows.
 A0017381	**Direct current and alternating current** ▪ A terminal to which alternating voltage or DC voltage is applied. ▪ A terminal through which alternating current or direct current flows.
 A0011200	**Ground connection** A grounded terminal which, as far as the operator is concerned, is grounded via a grounding system.
 A0011199	**Protective ground connection** A terminal which must be connected to ground prior to establishing any other connections.
 A0011201	**Equipotential connection** A connection that has to be connected to the plant grounding system: This may be a potential equalization line or a star grounding system depending on national or company codes of practice.

1.1.3 Tool symbols

 A0011219	 A0011220	 A0013442	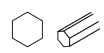 A0011221	 A0011222
Cross-head screwdriver	Flat blade screwdriver	Torx screwdriver	Allen key	Hexagon wrench

1.1.4 Symbols for certain types of information

Symbol	Meaning
 A0011182	**Allowed** Indicates procedures, processes or actions that are allowed.
 A0011183	**Preferred** Indicates procedures, processes or actions that are preferred.
 A0011184	**Forbidden** Indicates procedures, processes or actions that are forbidden.
 A0011193	**Tip** Indicates additional information.
 A0011194	**Reference to documentation** Refers to the corresponding device documentation.
 A0011195	**Reference to page** Refers to the corresponding page number.
 A0011196	**Reference to graphic** Refers to the corresponding graphic number and page number.
1., 2., 3. ...	**Series of steps**
✔	**Result of a sequence of actions**

1.1.5 Symbols in graphics

Symbol	Meaning
1, 2, 3 ...	Item numbers
1., 2., 3. ...	Series of steps
A, B, C, ...	Views
A-A, B-B, C-C, ...	Sections

Symbol	Meaning
 A0011187	**Hazardous area** Indicates a hazardous area.
 A0011188	**Safe area (non-hazardous area)** Indicates a non-hazardous location.

1.1.6 Symbols at the device

Symbol	Meaning
	**Safety instructions** Observe the safety instructions contained in the associated Operating Instructions.
	**Temperature resistance of the connection cables** Specifies the minimum value of the temperature resistance of the connection cables.

2 Basic safety instructions

2.1 Requirements for the personnel

The personnel must fulfill the following requirements for its tasks:
- Trained, qualified specialists must have a relevant qualification for this specific function and task
- Are authorized by the plant owner/operator
- Are familiar with federal/national regulations
- Before beginning work, the specialist staff must have read and understood the instructions in the Operating Instructions and supplementary documentation as well as in the certificates (depending on the application)
- Following instructions and basic conditions

2.2 Designated use

Application and measured materials
The measuring device described in these Operating Instructions is intended only for level measurement of bulk solids. Depending on the version ordered the device can also measure potentially explosive, flammable, poisonous and oxidizing materials.

Observing the limit values specified in the "Technical data" and listed in the Operating Instructions and supplementary documentation, the measuring device may be used for the following measurements only:
- Measured process variables: level
- Calculated process variables: Volume or mass in arbitrarily shaped vessels (calculated from the level by the linearization functionality)

To ensure that the measuring device remains in proper condition for the operation time:
- Use the measuring device only for measured materials against which the process-wetted materials are adequately resistant.
- Observe the limit values in "Technical data".

Incorrect use
The manufacturer is not liable for damage caused by improper or non-designated use.

Verification for borderline cases:
- For special measured materials and cleaning agents, Endress+Hauser is glad to provide assistance in verifying the corrosion resistance of wetted materials, but does not accept any warranty or liability.

Residual risk
The electronics housing and its built-in components such as display module, main electronics module and I/O electronics module may heat to 80 °C (176 °F) during operation through heat transfer from the process as well as power dissipation within the electronics. During operation the sensor may assume a temperature near the temperature of the measured material.

Danger of burns due to heated surfaces!
- For high process temperatures: Install protection against contact in order to prevent burns.

2.3 Workplace safety

For work on and with the device:
- ▶ Wear the required personal protective equipment according to federal/national regulations.

2.4 Operational safety

Risk of injury.
- ▶ Operate the device in proper technical condition and fail-safe condition only.
- ▶ The operator is responsible for interference-free operation of the device.

Conversions to the device

Unauthorized modifications to the device are not permitted and can lead to unforeseeable dangers.
- ▶ If, despite this, modifications are required, consult with the manufacturer.

Repair

To ensure continued operational safety and reliability,
- ▶ Carry out repairs on the device only if they are expressly permitted.
- ▶ Observe federal/national regulations pertaining to repair of an electrical device.
- ▶ Use original spare parts and accessories from the manufacturer only.

Hazardous area

To eliminate a danger for persons or for the facility when the device is used in the hazardous area (e.g. explosion protection, pressure vessel safety):
- ▶ Based on the nameplate, check whether the ordered device is permitted for the intended use in the hazardous area.
- ▶ Observe the specifications in the separate supplementary documentation that is an integral part of these Instructions.

2.5 Product safety

This measuring device is designed in accordance with good engineering practice to meet state-of-the-art safety requirements, has been tested, and left the factory in a condition in which they are safe to operate.

It meets general safety standards and legal requirements. It also complies with the EC directives listed in the device-specific EC Declaration of Conformity. Endress+Hauser confirms this by affixing the CE mark to the device.

3 Product description

3.1 Design

3.1.1 Levelflex FMP56/FMP57

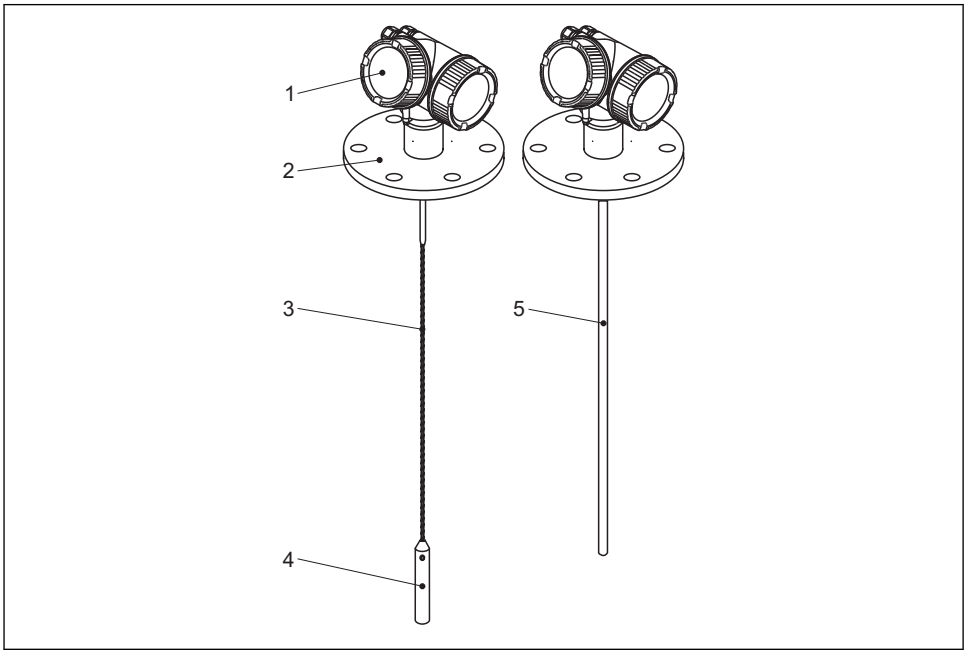

1 Design of the Levelflex

1 Electronics housing
2 Process connection (here as an example: flange)
3 Rope probe
4 End-of-probe weight
5 Rod probe

3.1.2 Electronics housing

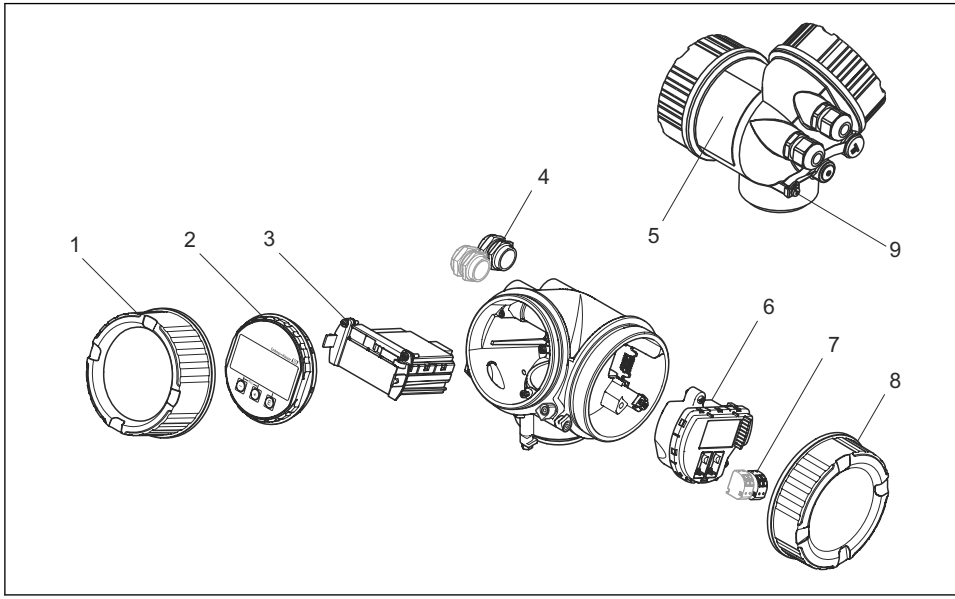

2 Design of the electronics housing

1 *Electronics compartment cover*
2 *Display module*
3 *Main electronics module*
4 *Cable glands (1 or 2, depending on instrument version)*
5 *Nameplate*
6 *I/O electronics module*
7 *Terminals (pluggable spring terminals)*
8 *Connection compartment cover*
9 *Grounding terminal*

4 Incoming acceptance and product identification

4.1 Incoming acceptance

A0015502

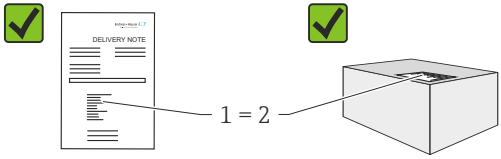

A0022480

Is the order code on the delivery note (1) identical to the order code on the product sticker (2)?

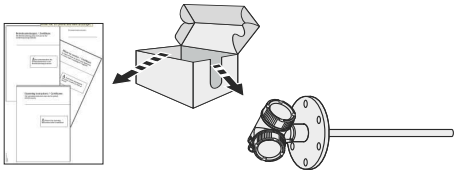

A0022486

A0015502

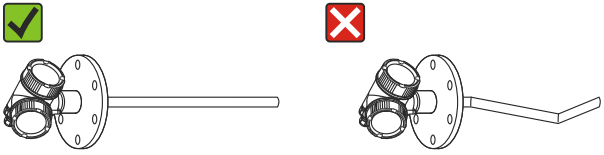

A0022489

Are the goods undamaged?

A0015502

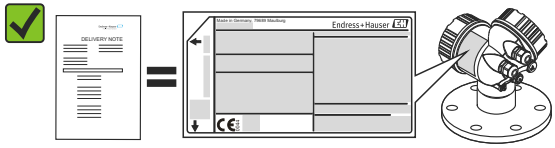

A0022491

Do the nameplate data match the ordering information on the delivery note?

A0015502

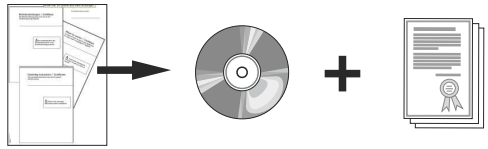

A0022494

Is the DVD (operating tool) present?
If required (see nameplate): Are the Safety Instructions (XA) present?

If one of the conditions does not comply, contact your Endress+Hauser distributor.

4.2 Product identification

The following options are available for identification of the measuring device:
- Nameplate specifications
- Order code with breakdown of the device features on the delivery note
- Enter serial numbers from nameplates in *W@M Device Viewer* (www.endress.com/deviceviewer): All information about the measuring device is displayed.
- Enter the serial number from the nameplates into the *Endress+Hauser Operations App* or scan the 2-D matrix code (QR code) on the nameplate with the *Endress+Hauser Operations App*: all the information for the measuring device is displayed.

4.2.1 Nameplate

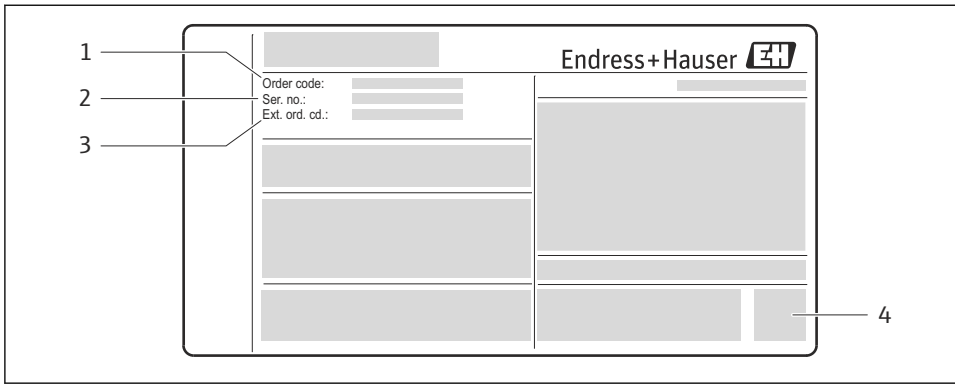

3 Example of a nameplate

1 Order code
2 Serial number (Ser. no.)
3 Extended order code (Ext. ord. cd.)
4 2-D matrix code (QR code)

For detailed information about interpreting the nameplate specifications, refer to the Operating Instructions for the device.

Only 33 digits of the extended order code can be indicated on the nameplate. If the extended order code exceeds 33 digits, the rest will not be shown. However, the complete extended order code can be viewed in the operating menu of the device in the **Extended order code 1 to 3** parameter.

4.3 Device documentation

All devices are supplied with Brief Operating Instructions. These Brief Operating Instructions are not a substitute for the Operating Instructions pertaining to the device!

Detailed information about the device can be found in the Operating Instructions and the other documentation:
Available for all device versions via:
– Internet: www.endress.com/deviceviewer
– Smart phone/tablet: *Endress+Hauser Operations App*

The information required to retrieve the documentation can be found on the nameplate of the device.

Technical documentation can also be downloaded from the Download Area of the Endress+Hauser web site: www.endress.com→ Download. However this technical documentation applies to a particular instrument family and is not assigned to a specific device.

4.3.1 W@M Device Viewer

1. Launch the W@M Device Viewer: www.endress.com/deviceviewer
2. Enter the serial number (Ser. no.) of the device: see nameplate.
   ↳ All the associated documentation is displayed.

4.3.2 Endress+Hauser Operations App

The *Endress+Hauser Operations App* is available both for android smart phones (Google Play Store) and for iPhones and iPads (App Store).

Via the serial number:

1. Launch the *Endress+Hauser Operations App*.
2. Enter the serial number (Ser. no.) of the device: see nameplate.
   ↳ All the associated documentation is displayed.

Via the 2-D matrix code (QR code):

1. Launch the *Endress+Hauser Operations App*.
2. Scan the 2-D matrix code (QR code) on the nameplate.
   ↳ All the associated documentation is displayed.

5 Storage, Transport

5.1 Storage conditions

- Permitted storage temperature: −40 to +80 °C (−40 to +176 °F)
- Use the original packaging.

5.2 Transport product to the measuring point

⚠ WARNING

Housing or probe may be damaged or break away.

Risk of injury!

- ▶ Transport the measuring device to the measuring point in its original packaging or at the process connection.
- ▶ Do not fasten lifting devices (hoisting slings, lifting eyes etc.) at the housing or the probe but at the process connection. Take into account the mass center of the device in order to avoid unintended tilting.
- ▶ Comply with the safety instructions, transport conditions for devices over 18kg (39.6lbs).

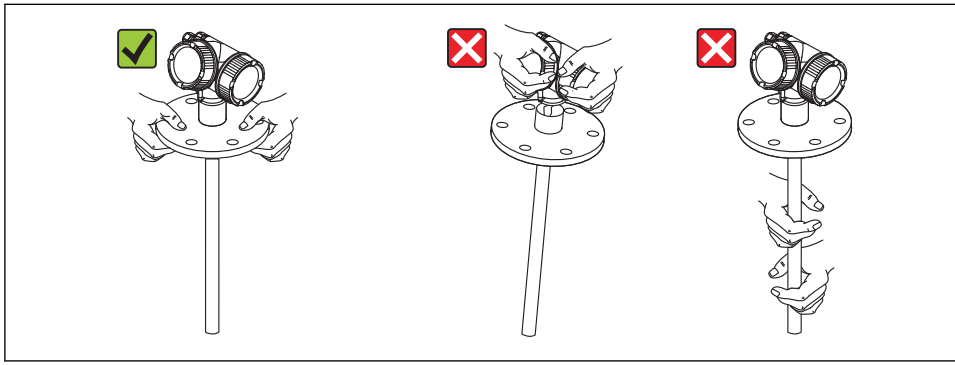

A0013920

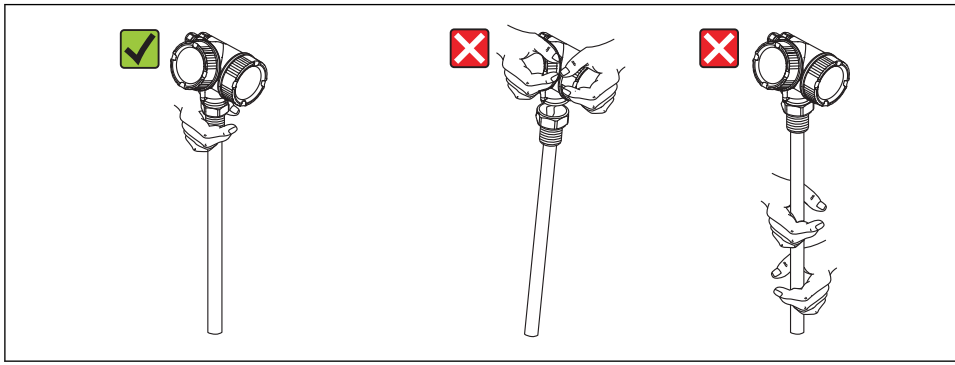

A0014264

6 Mounting

6.1 Mounting requirements

6.1.1 Suitable mounting position

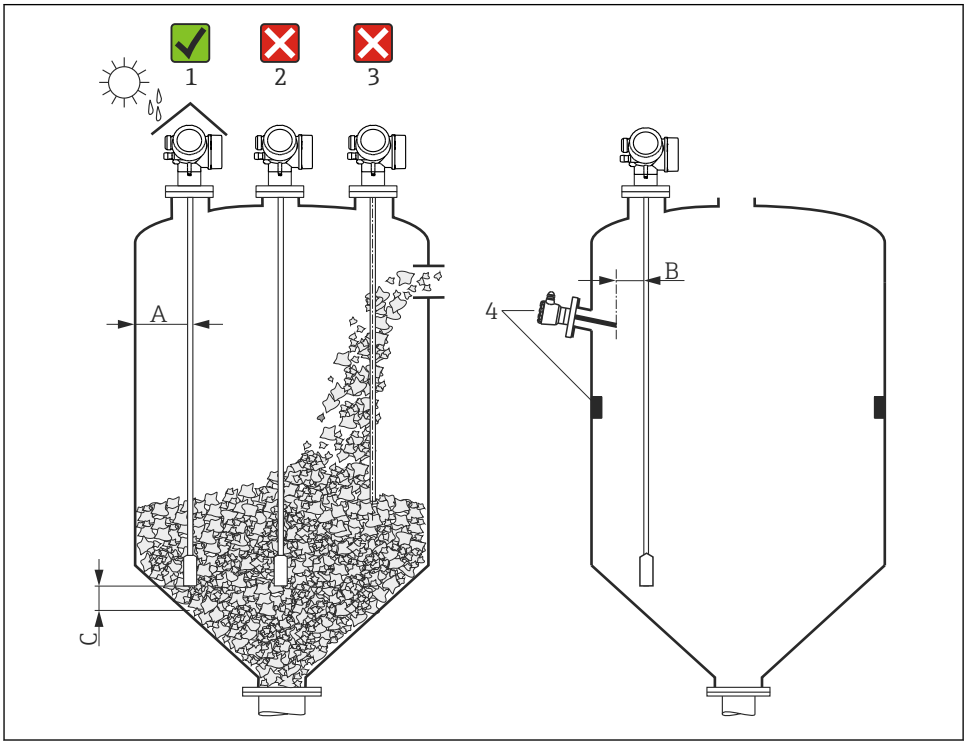

4 *Mounting requirements for Levelflex*

Mounting distances

- Distance (A) between wall and rod or rope probe:
  - for smooth metallic walls: > 50 mm (2")
  - for plastic walls: > 300 mm (12") mm to metallic parts outside the vessel
  - for concrete walls: > 500 mm (20") , otherwise the available measuring range may be reduced.
- Distance (B) between rod or rope probe and internal fittings in the vessel: > 300 mm (12")
- Distance (C) from end of probe to bottom of the vessel:
  - Rope probe: > 150 mm (6 in)
  - Rod probe: > 10 mm (0.4 in)

Additional conditions

- When mounting in the open, a weather protection cover (1) may be installed to protect the device against extreme weather conditions.
- In metallic vessels: Preferably do not mount the probe in the center of the vessel (2), as this would lead to increased interference echoes.
  If a central mounting position can not be avoided, it is crucial to perform an interference echo suppresion(mapping) after the commissioning of the device.
- Do not mount the probe in the filling curtain (3).
- Avoid buckling the rope probe during installation or operation (e.g. through product movement against silo wall) by selecting a suitable mounting location.
- Check the probe regularly for defects.

With suspended rope probes (probe end not fixed at the bottom) the distance between the probe rope and internal fittings in the tank must not fall below 300 mm (12") during the entire process. A sporadic contact between the probe weight and the cone of the vessel, however, does not influence the measurement as long as the dielectric constant of the medium is at least DC = 1.8.

When mounting the electronics housing into a recess (e.g. in a concrete ceiling), observe a minimum distance of 100 mm (4 inch) between the cover of the terminal compartment / electronics compartment and the wall. Otherwise the connection compartment / electronics compartment is not accessible after installation.

6.1.2 Notes on the process connection

Probes are mounted to the process connection with threaded connections or flanges. If during this installation there is the danger that the probe end moves so much that it touches the tank floor or cone at times, the probe must, if necessary, be shortened and fixed down (→ 🖹 20).

Threaded connection

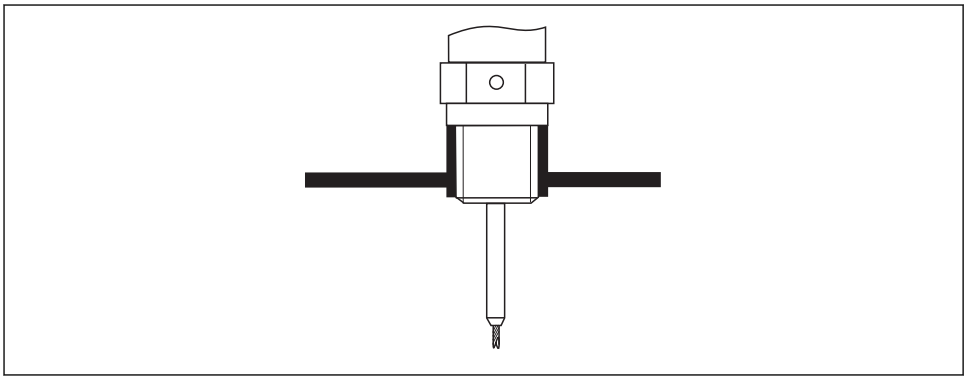

A0015121

5 Mounting with threaded connection; flush with the container ceiling

Seal

The thread as well as the type of seal comply to DIN 3852 Part 1, screwed plug form A.

They can be sealed with the following types of sealing rings:

- Thread G3/4": According to DIN 7603 with the dimensions 27 x 32 mm
- Thread G1-1/2": According to DIN 7603 with the dimensions 48 x 55 mm

Please use a sealing ring according to this standard in the form A, C or D and of a material that is resistant to the application.

Nozzle mounting

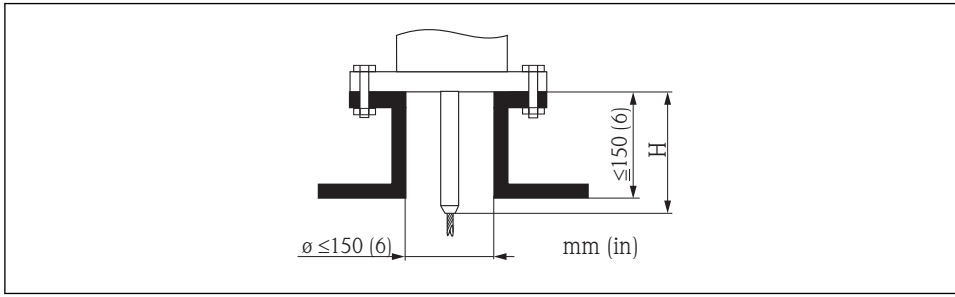

A0015122

Length H of the rigid part of the rope probe

Probe	H
FMP56, Φ rope 4 mm (0.16 in)	94 mm (3.7 in)
FMP57, Φ rope 4 mm (0.16 in)	120 mm (4.7 in)
FMP57, Φ rope 6 mm (0.24 in)	135 mm (5.3 in)

- Permissible nozzle diameter: ≤150 mm (6 in).
  For larger diameters the near range measuring capability may be reduced.
  For nozzles ≥ DN300: (→ 19).
- Permissible nozzle height [1]: ≤150 mm (6 in).
  For a larger height the near range measuring capability may be reduced.
  Larger nozzle heights may be possible in special cases (see section "Rod extension/centering HMP40 for FMP57").

With thermally insulated vessels the nozzle should also be insulated in order to prevent condensate formation.

1) Larger nozzle heights on request

Rod extension/centering HMP40 for FMP57

For FMP57 with rope probes the rod extension/centering HMP 40 is available as an accessory. It has to be used if otherwise the probe rope comes into contact with the lower edge of the nozzle.

This accessory consists of the extension rod corresponding to the nozzle height, on which a centering disk is also mounted if the nozzles are narrow or when working in bulk solids. This component is delivered separately from the device. Please order the probe length correspondingly shorter.

Centering disks with small diameters (DN40 and DN50) may only be used if there is no significant build-up in the nozzle above the disk. The nozzle must not become clogged by the product.

Installation in nozzles ≥ DN300

If installation in ≥ 300mm/12" nozzles is unavoidable, installation must be carried out in accordance with the following sketch.

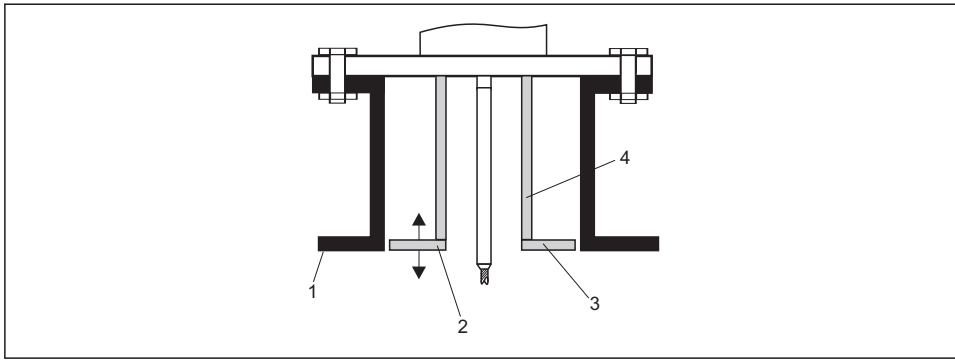

A0014199

1 Lower edge of the nozzle
2 Approx. flush with the lower edge of the nozzle (± 50 mm/2")
3 Plate
4 Pipe Φ 150 to 180 mm (6 to 7 inch)

Nozzle diameter	Plate diameter
300 mm (12")	280 mm (11")
≥ 400 mm (16")	≥ 350 mm (14")

6.1.3 Securing the probe

Securing rope probes

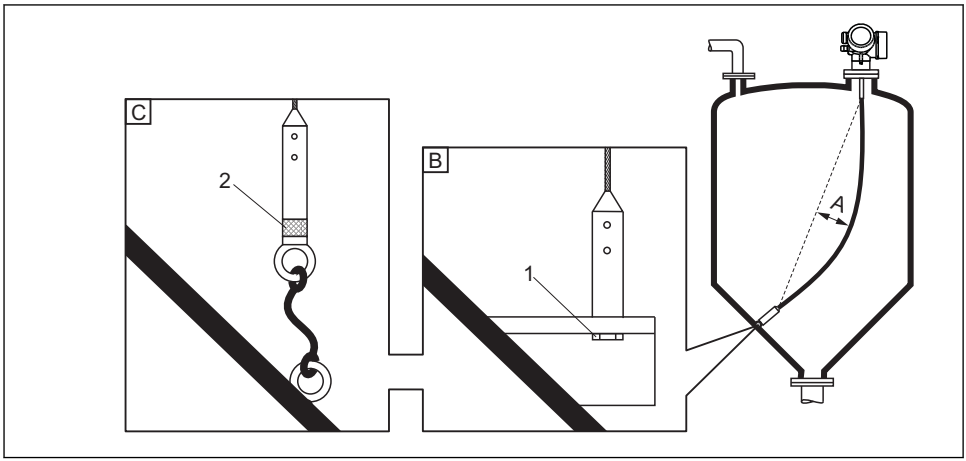

A Sag of the rope: ≥ 1 cm per 1m of the probe length (0.12 inch per 1 ft of the probe length)
B Reliably grounded end of probe
C Reliably isolated end of probe
1: Mounting and contact with a bolt
2 Mounting kit isolated

- The end of the probe needs to be secured under the following conditions:
  - if otherwise the probe sporadically comes into contact with the wall of the vessel, the outlet cone, internal fittings or other parts of the installation.
  - if otherwise the probe sporadically gets close to a concrete wall (minimum distance 0.5 m / 20 inch).
- The end of probe can be secured at its internal thread
  - rope 4 mm (1/6"), 316: M 14
  - rope 6 mm (1/4"), 316: M 20
  - rope 6mm (1/4"), PA>steel: M14
  - rope 8mm (1/3"), PA>steel: M20
- Preferably use the 6 mm (1/4") rope probe due to the higher tensile strength when fixing a rope probe.
- The fixing must be either reliably grounded or reliably insulated. If it is not possible to mount the probe weight with a reliably insulated connection, it can be secured using an isolated eyelet, which is available as an accessory.
- In order to prevent an extremely high tensile load (e.g. due to thermal expansion) and the risk of rope crack, the rope has to be slack. Make the rope longer than the required measuring range such that there is a sag in the middle of the rope that is ≥ 1cm/(1 m rope length) [0.12 inch/(1 ft rope length)].

Securing rod probes

- For Ex-approvals: For probe lengths ≥3 m (10 ft) a support is required.
- In general, rod probes must be supported if there is a horizontal flow (e.g. from an agitator) or in the case of strong vibrations.
- Rod probes may only be supported at the end of the probe.

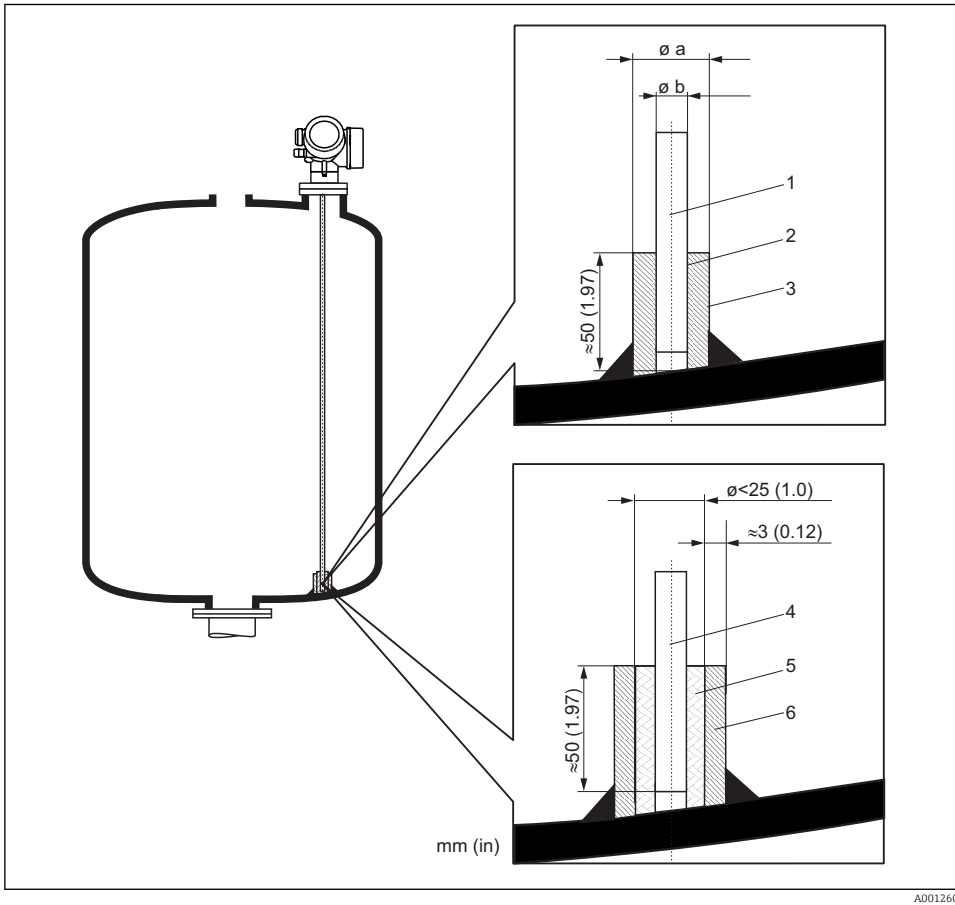

A0012607

1 *Probe rod, uncoated*
2 *Sleeve bored tight to ensure electrical contact between the rod and sleeve!*
3 *Short metal pipe, e.g. welded in place*
4 *Probe rod, coated*
5 *Plastic sleeve, e.g. PTFE, PEEK or PPS*
6 *Short metal pipe, e.g. welded in place*

NOTICE

Poor grounding of the end of probe may cause measuring errors.

- Apply a narrow sleeve which has good electrical contact to the probe.

NOTICE

Welding may damage the main electronics module.

- Before welding: Ground the probe and dismount electronics.

6.1.4 Special mounting conditions

Non-metallic vessels

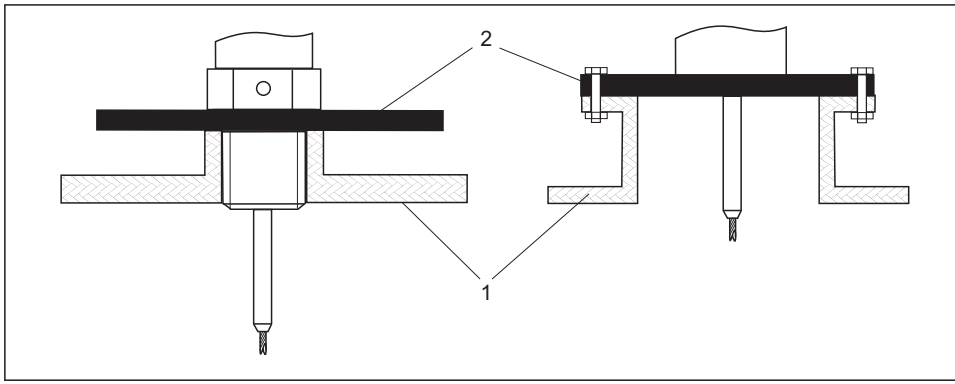

A0012527

1 Non-metallic vessel
2 Metal sheet or metal flange

To measure, Levelflex with a rod probe needs a metallic surface at the process connection. Therefore:

- Select an instrument version with metal flange (minimum size DN50/2").
- Or: mount a metal sheet with a diameter of at least 200 mm (8") to the probe at the process connection. Its orientation must be perpendicular to the probe.

6.2 Mounting the device

6.2.1 Required mounting tools

- For mounting thread 3/4": Hexagonal wrench 36 mm
- For mounting thread 1-1/2": Hexagonal wrench 55 mm
- To shorten rod or coax probes: Saw
- To shorten rope probes:
  - Allen key AF 3 mm (for 4mm ropes) or AF 4 mm (for 6 mm ropes)
  - Saw or bolt cutter
- For flanges and other process connections: appropriate mounting tools
- To turn the housing: Hexagonal wrench 8 mm

6.2.2 Shortening the probe

When shortening the probe: Enter the new length of probe into the Quick Setup which can be found in the electronics housing behind the display module.

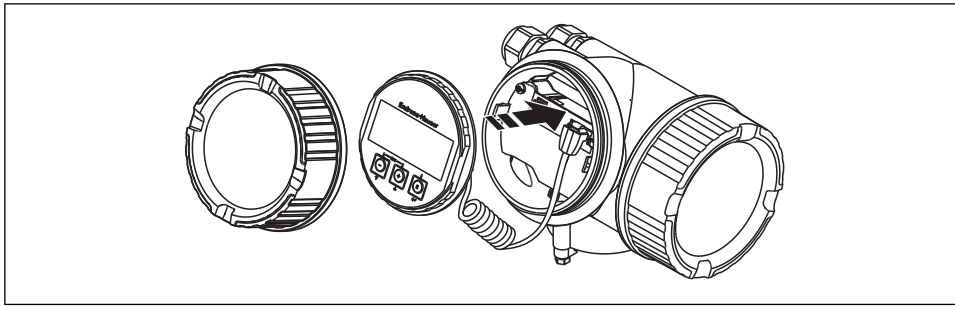

A0014241

Shortening rod probes

Rod probes must be shortened if the distance to the container floor or outlet cone is less than 10 mm (0.4 in). The rods of a rod probe are shortened by sawing at the bottom end.

Rod probes of FMP52 can **not** be shortened as they are coated.

Shortening rope probes

Rope probes must be shortened if the distance to the container floor or outlet cone is less than 150 mm (6 in).

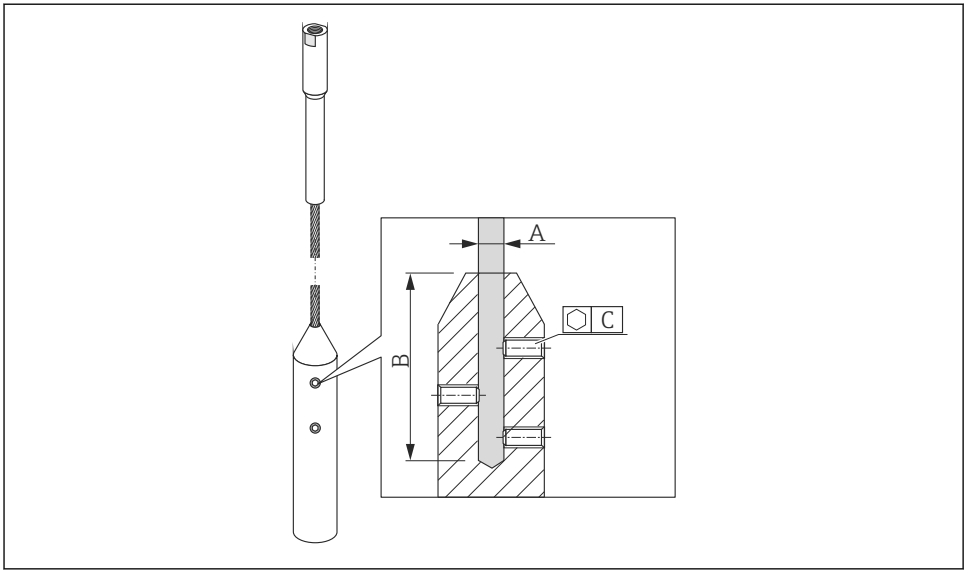

A0021693

Rope material	A	B	C	Torque for set screws
316	4 mm (0.16 in)	40 mm (1.6 in)	3 mm	5 Nm (3.69 lbf ft)
316	6 mm (0.24 in)	55 mm (2.2 in)	4 mm	15 Nm (11.06 lbf ft)
PA > steel	6 mm (0.24 in)	40 mm (1.6 in)	3 mm	5 Nm (3.69 lbf ft)
PA > steel	8 mm (0.31 in)	55 mm (2.2 in)	4 mm	15 Nm (11.06 lbf ft)

1. Using an Allen key, loosen the set screws at the end-of-probe weight. Note: The set screws have got a clamping coating in order to prevent accidental loosening. Thus an increased torque might be necessary to loosen them.
2. Remove released rope from the weight.
3. Measure off new rope length.
4. Wrap adhesive tape around the rope at the point to be shortened to prevent it from fanning out.
5. Saw off the rope at a right angle or cut it off with a bolt cutter.
6. Insert the rope completely into the weight.

7. Screw the set screws into place. Due to the clamping coating of the setscrews application of a screw locking fluid is not necessary.

6.2.3 Mounting the device

Mounting devices with thread

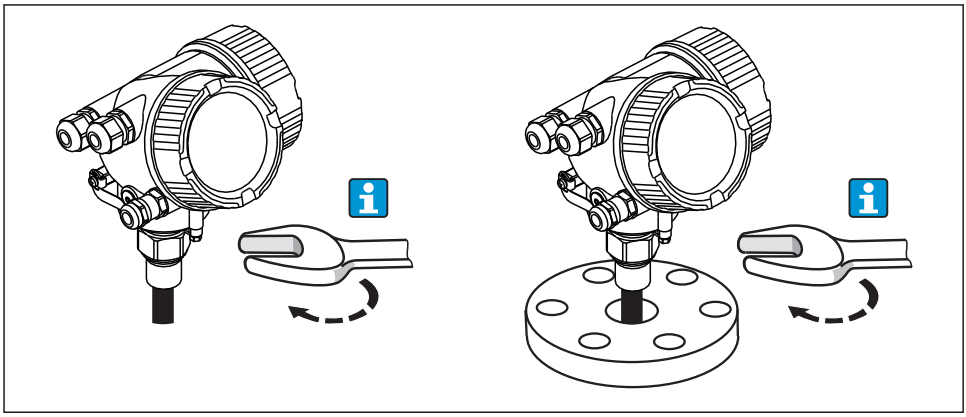

A0012528

Devices with mounting thread are screwed into a welding boss or a flange and are usually also secured with these.

- Tighten with the hexagonal nut only:
  - Thread 3/4": Hexagonal wrench 36 mm
  - Thread 1-1/2": Hexagonal wrench 55 mm
- Maximum permissible torque:
  - Thread 3/4": 45 Nm
  - Thread 1-1/2": 450 Nm
- Recommended torque when using the supplied aramid fibre seal and a process pressure of 40 bar (580 psi):
  - Thread 3/4": 25 Nm
  - Thread 1-1/2": 140 Nm
- When installing in metal containers, take care to ensure good metallic contact between the process connection and container.

Flange mounting

If a seal is used, be sure to use unpainted metal bolts to ensure good electrical contact between probe flange and process flange.

Mounting rope probes

NOTICE

Electrostatic discharges may damage the electronics.

▶ Earth the housing before lowering the rope into the vessel.

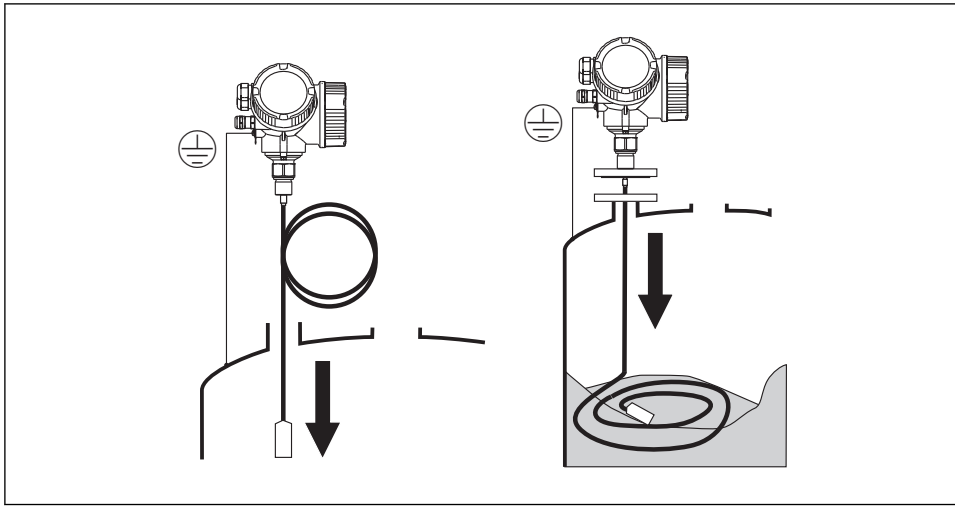

A0012529

When lowering the rope probe into the vessel, observe the following:

- Uncoil rope and lower it slowly and carefully into the vessel.
- Do not kink the rope.
- Avoid any backlash, since this might damage the probe or the vessel fittings.

Mounting rope probes in a partially full silo

It is not always possible to empty a silo which is already in operation. If a minimum of 2/3 of the silo is empty, it is possible to install the probe into the partially filled silo. If possible, make a visual check after the installation to see that the rope has not tangled or is lying such that it can knot when the level falls. Before full accuracy is obtained the probe rope must hang fully extended.

6.2.4 Mounting the "Sensor remote" version

This section is only valid for devices of the version "Probe Design" = "Sensor remote" (feature 600, option MB/MC/MD).

For the version "Probe design" = "Sensor remote" the following is supplied:

- The probe with the process connection
- The electronics housing
- The mounting bracket for wall or pipe mounting of the electronics housing
- The connection cable (length as ordered). The cable has got one straight and one angled plug (90°). Depending on the local conditions the angled plug can be connected at the probe or at the electronics housing.

CAUTION

The plugs of the connection cable may be damaged by mechanical stress.

- ▶ Mount the probe and the electronics housing tightly before connecting the cable.
- ▶ Lay the cable such that it is not exposed to mechanical stress. Minimum bending radius: 100 mm (4").
- ▶ When connecting the cable: Connect the straight plug before the angled one. Torque for both coupling nuts: 6 Nm.

If the meeasuring point is exposed to strong vibrations, an additional locking compound (e.g. Loctite 243) can be applied at the plug connectors.

Mounting the electronics housing

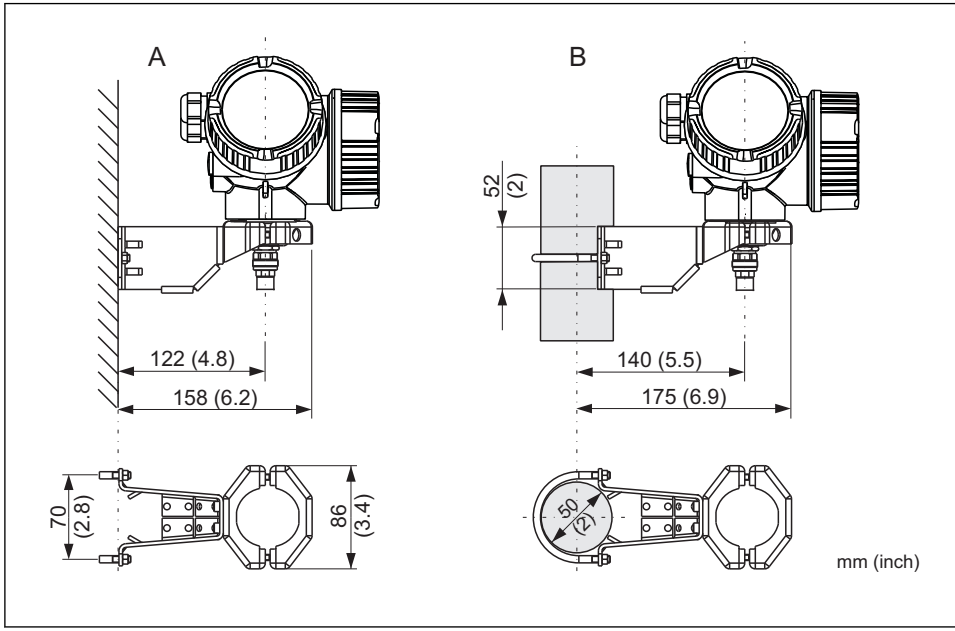

6 Mounting the electronics housing using the mounting bracket

A Wall mounting
B Pipe mounting

Connecting the cable

Required tools:
Open-end wrench 18AF

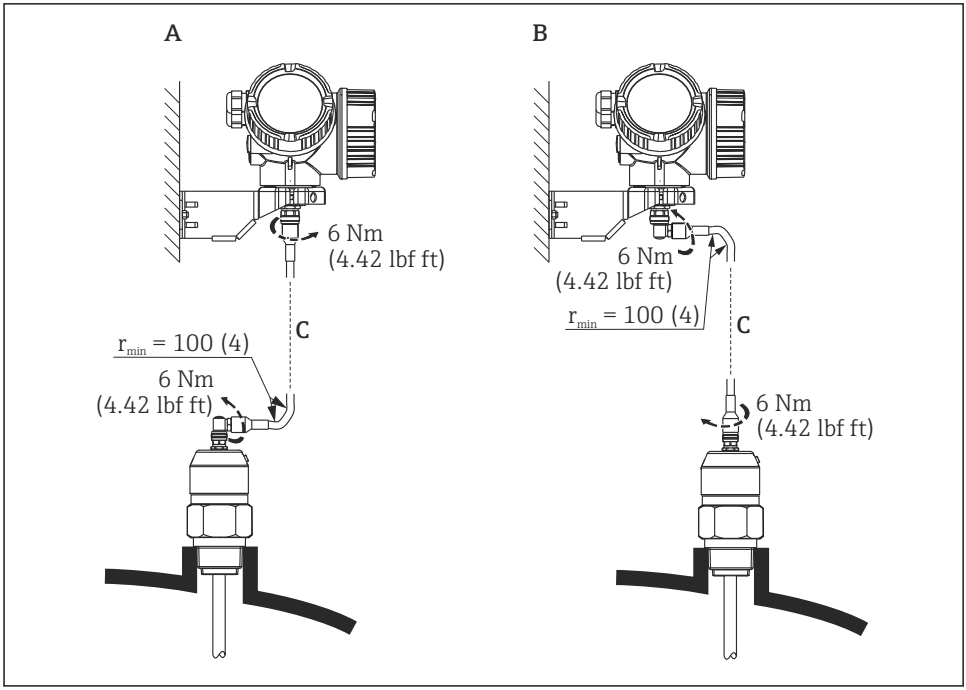

7 Connecting the cable. There are the following possibilities:

A Angled plug at the probe
B Angled plug at the electronics housing
C Length of the remote cable as ordered

6.2.5 Turning the transmitter housing

To provide easier access to the connection compartment or display module, the transmitter housing can be turned:

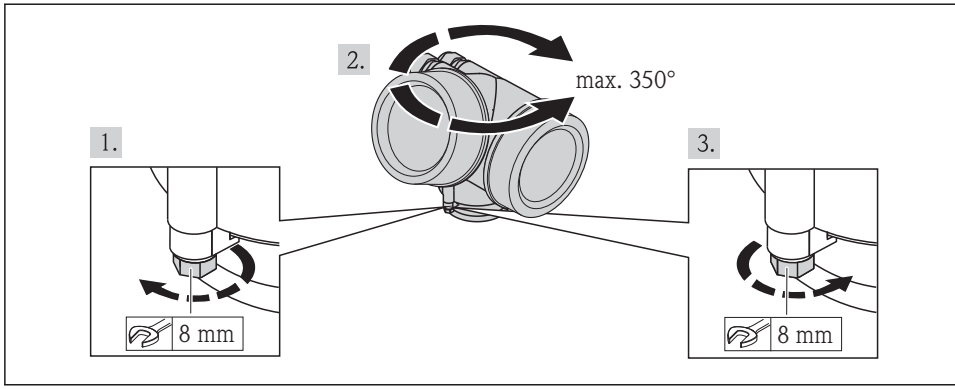

A0013713

1. Unscrew the securing screw using an open-ended wrench.
2. Rotate the housing in the desired direction.
3. Tighten the securing screw (1,5 Nm for plastics housing; 2,5 Nm for aluminium or stainless steel housing).

6.2.6 Turning the display module

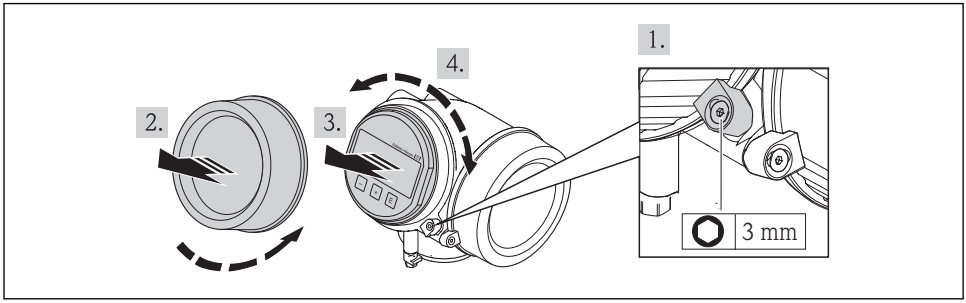

A0013905

1. If present: Loosen the screw of the securing clamp of the electronics compartment cover using an Allen key and turn the clamp 90° conterclockwise.
2. Unscrew cover of the electronics compartment from the transmitter housing.
3. Pull out the display module with a gentle rotation movement.
4. Rotate the display module into the desired position: Max. 8 × 45 ° in each direction.
5. Feed the spiral cable into the gap between the housing and main electronics module and plug the display module into the electronics compartment until it engages.
6. Screw the cover of the electronics compartment firmly back onto the transmitter housing.
7. Tighten the securing clamp again using the Allen key (Torque: 2.5 Nm).

6.3 Post-installation check

❍	Is the device undamaged (visual inspection)?
❍	Does the device conform to the measuring point specifications? For example: ▪ Process temperature ▪ Process pressure (refer to the chapter on "Material load curves" of the "Technical Information" document) ▪ Ambient temperature range ▪ Measuring range
❍	Are the measuring point identification and labeling correct (visual inspection)?
❍	Is the device adequately protected from precipitation and direct sunlight?
❍	Are the securing screw and securing clamp tightened securely?

7 Electrical connection

7.1 Connection conditions

7.1.1 Terminal assignment

2-wire: 4-20mA HART

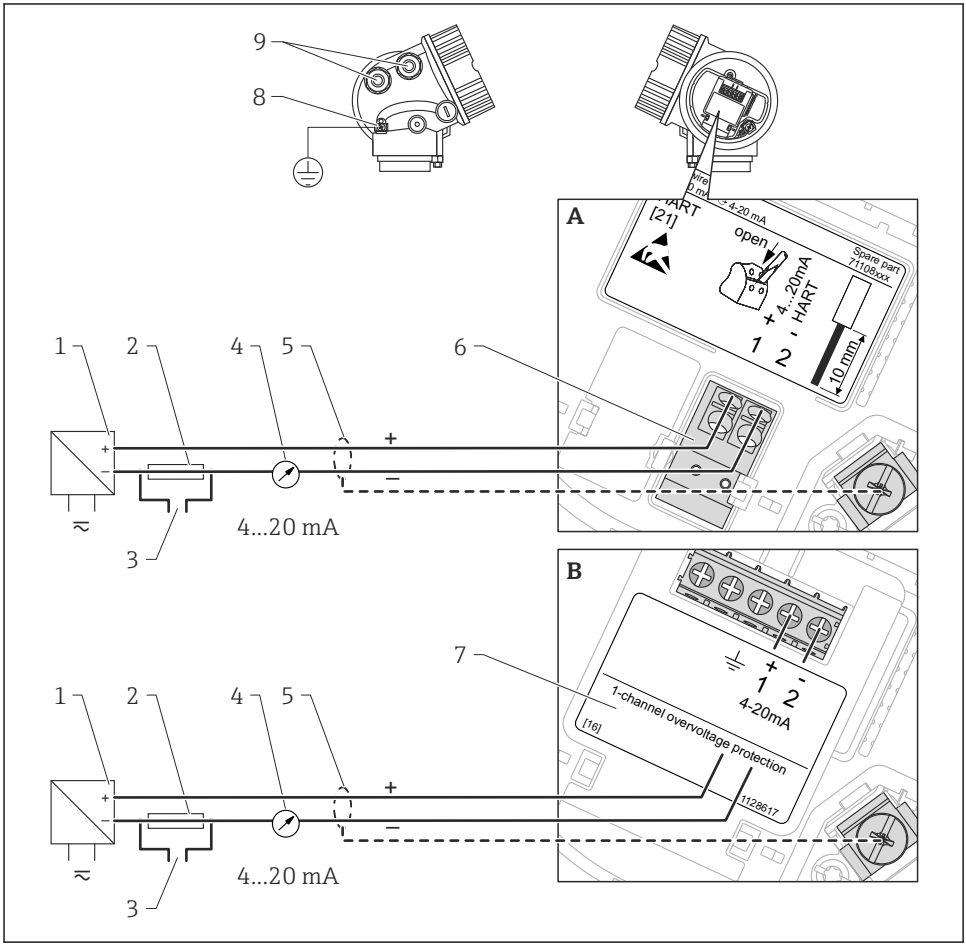

8 Terminal assignment 2-wire; 4-20mA HART

A Without integrated overvoltage protection
B With integrated overvoltage protection
1 Active barrier with power supply (e.g. RN221N): Observe terminal voltage
2 HART communication resistor (≥250 Ω): Observe maximum load

3 Connection for Commubox FXA195 or FieldXpert SFX350/SFX370 (via VIATOR Bluetooth modem)
4 Analog display device: Observe maximum load
5 Cable screen; observe cable specification
6 4-20mA HART (passive): Terminals 1 and 2
7 Overvoltage protection module
8 Terminal for potential equalization line
9 Cable entry

2-wire: 4-20mA HART, switch output

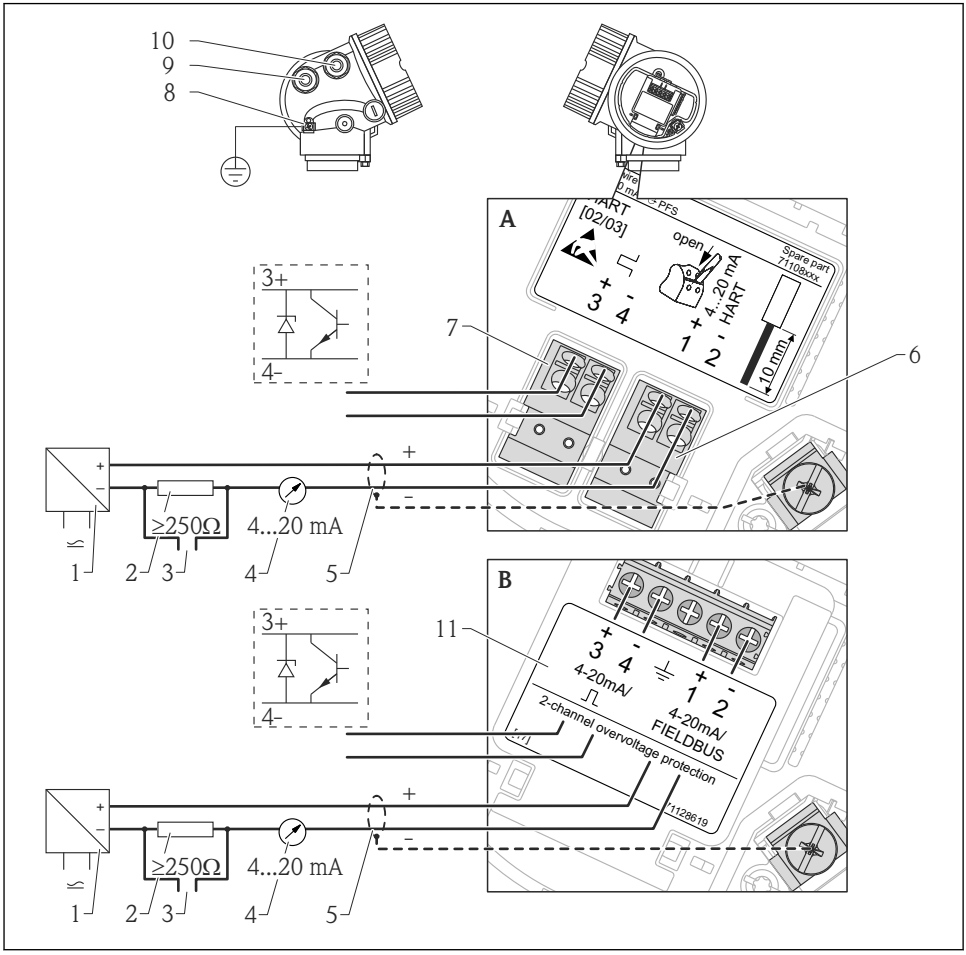

9 Terminal assignment 2-wire; 4-20mA HART, switch output

A Without integrated overvoltage protection
B With integrated overvoltage protection
1 Active barrier with power supply (e.g. RN221N): Observe terminal voltage
2 HART communication resistor (≥250 Ω): Observe maximum load
3 Connection for Commubox FXA195 or FieldXpert SFX350/SFX370 (via VIATOR Bluetooth modem)
4 Analog display device: Observe maximum load
5 Cable screen; observe cable specification
6 4-20mA HART (passive): Terminals 1 and 2
7 Switch output (open collector): Terminals 3 and 4
8 Terminal for potential equalization line

9 Cable entry for 4-20mA HART line
10 Cable entry for switch output line
11 Overvoltage protection module

2-wire: 4-20mA HART, 4-20mA

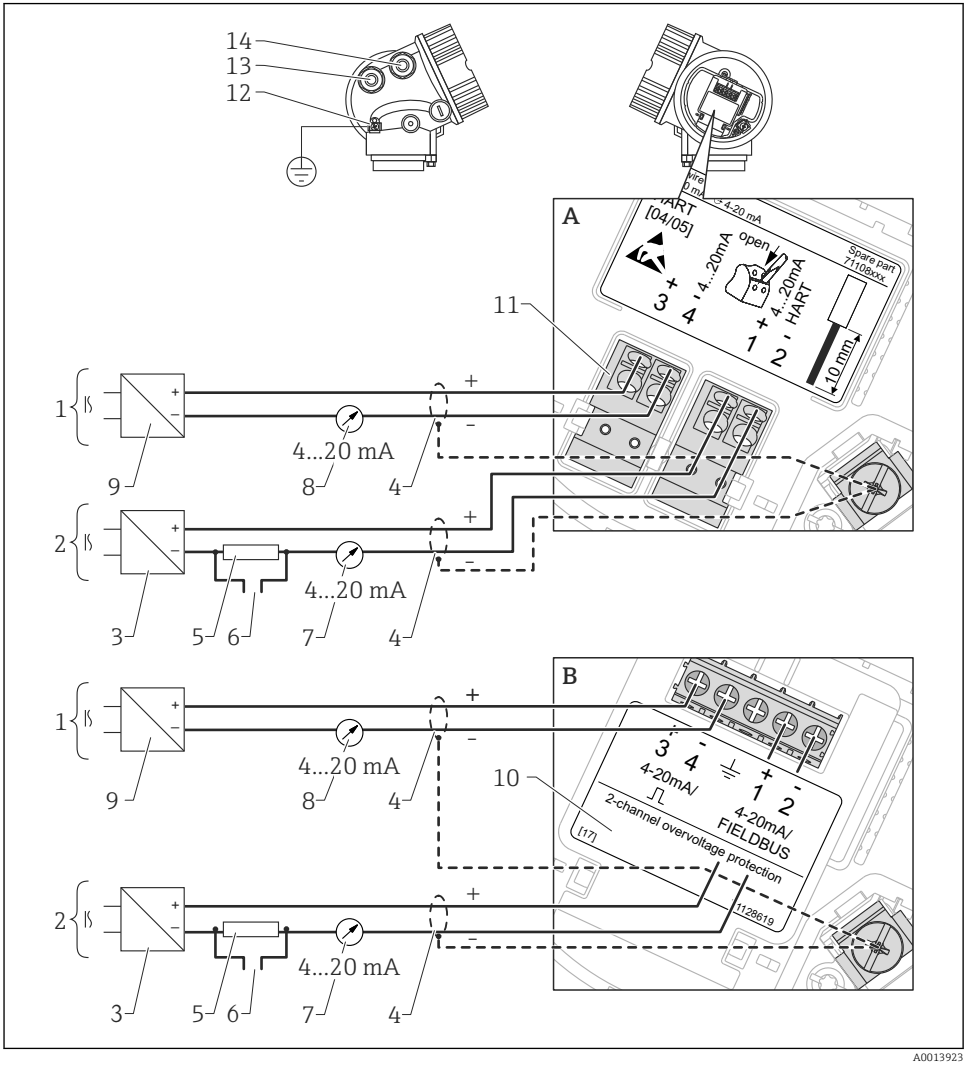

10 Terminal assignment 2-wire, 4-20 mA HART, 4...20mA

A Without integrated overvoltage protection
B With integrated overvoltage protection
1 Connection current output 2
2 Connection current output 1
3 Supply voltage for current output 1 (e.g. RN221N); Observe terminal voltage
4 Cable screen; observe cable specification
5 HART communication resistor (≥ 250 Ω): Observe maximum load

6 Connection for Commubox FXA195 or FieldXpert SFX350/SFX370 (via VIATOR Bluetooth modem)
7 Analog display device ; observe maximum load
8 Analog display device ; observe maximum load
9 Supply voltage for current output 2 (e.g. RN221N); Obesrve terminal voltage
10 Overvoltage protection module
11 Current output 2: Terminals 3 and 4
12 Terminal for the potential equalization line
13 Cable entry for current output 1
14 Cable entry for current output 2

This version is also suited for single-channel operation. In this case, current output 1 (terminals 1 and 2) must be used.

4-wire: 4-20mA HART (10.4 to 48 V_{DC})

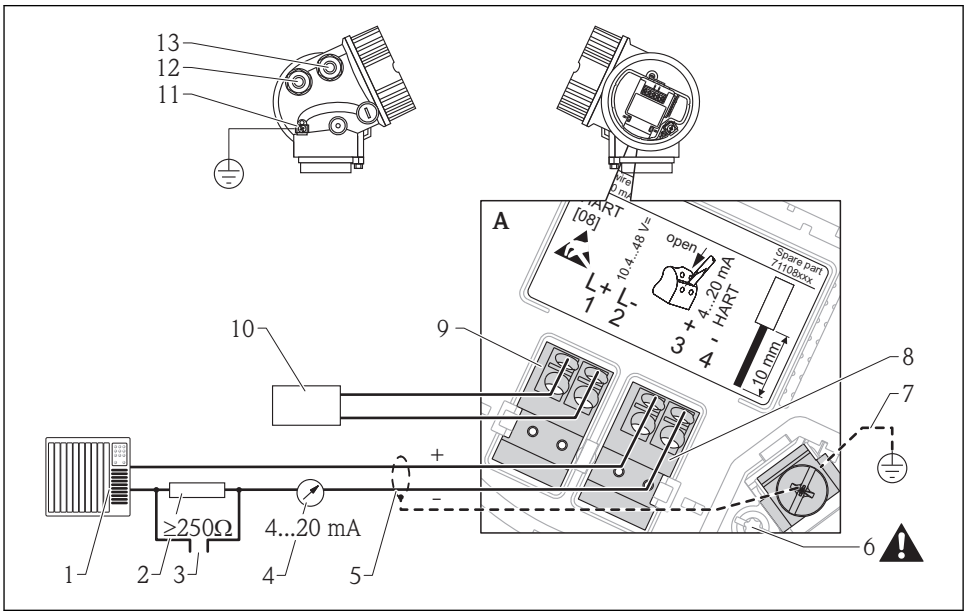

A0011340

11 *Terminal assignment 4-wire; 4-20mA HART (10.4 to 48 VDC)*

1 *Evaluation unit, e.g. PLC*
2 *HART communication resistor (≥250 Ω): Observe maximum load*
3 *Connection for Commubox FXA195 or FieldXpert SFX350/SFX370 (via VIATOR Bluetooth modem)*
4 *Analog display device: Observe maximum load*
5 *Signal cable including screening (if required), observe cable specification*
6 *Protective connection; do not disconnect!*
7 *Protective earth, observe cable specification*
8 *4...20mA HART (active): Terminals 3 and 4*
9 *Supply voltage: Terminals 1 and 2*
10 *Supply voltage: Observe terminal voltage, observe cable specification*
11 *Terminal for potential equalization*
12 *Cable entry for signal line*
13 *Cable entry for power supply*

⚠ CAUTION

To ensure electrical safety:

- ▶ Do not disconnect the protective connection (6).
- ▶ Disconnect the supply voltage before disconnecting the protective earth (7).

Connect protective earth to the internal ground terminal (7) before connecting the supply voltage. If necessary, connect the potential matching line to the external ground terminal (11).

In order to ensure electromagnetic compatibility (EMC): Do not only ground the device via the protective earth conductor of the supply cable. Instead, the functional grounding must also be connected to the process connection (flange or threaded connection) or to the external ground terminal.

An easily accessible power switch must be installed in the proximity of the device. The power switch must be marked as a disconnector for the device (IEC/EN61010).

4-wire: 4-20mA HART (90 to 253 V_{AC})

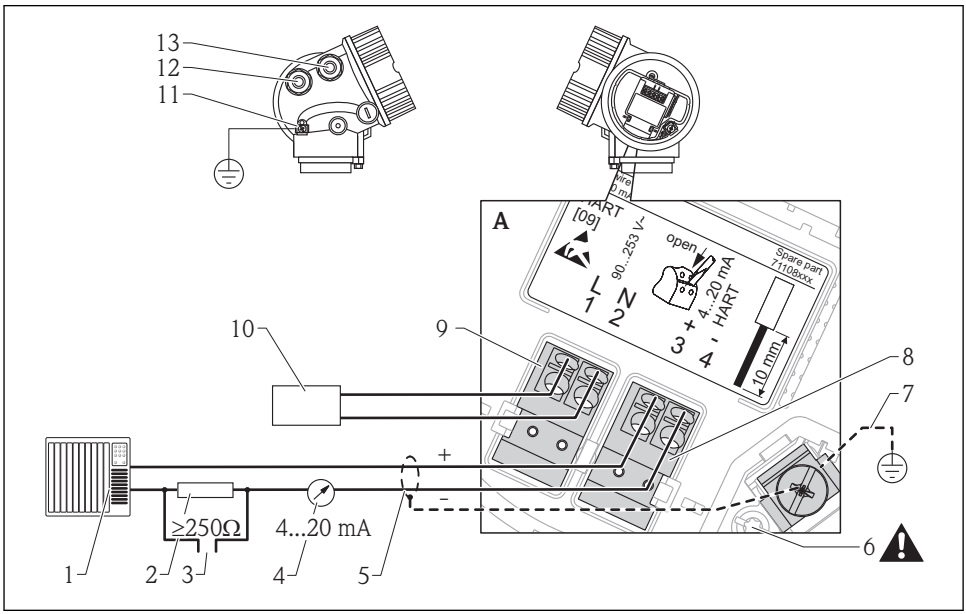

12 *Terminal assignment 4-wire; 4-20mA HART (90 to 253 VAC)*

1 *Evaluation unit, e.g. PLC*
2 *HART communication resistor (≥250 Ω): Observe maximum load*
3 *Connection for Commubox FXA195 or FieldXpert SFX350/SFX370 (via VIATOR Bluetooth modem)*
4 *Analog display device: Observe maximum load*
5 *Signal cable including screening (if required), observe cable specification*
6 *Protective connection; do not disconnect!*
7 *Protective earth, observe cable specification*
8 *4...20mA HART (active): Terminals 3 and 4*
9 *Supply voltage: Terminals 1 and 2*
10 *Supply voltage: Observe terminal voltage, observe cable specification*
11 *Terminal for potential equalization*
12 *Cable entry for signal line*
13 *Cable entry for power supply*

⚠ CAUTION

To ensure electrical safety:

- ▶ Do not disconnect the protective connection (6).
- ▶ Disconnect the supply voltage before disconnecting the protective earth (7).

Connect protective earth to the internal ground terminal (7) before connecting the supply voltage. If necessary, connect the potential matching line to the external ground terminal (11).

In order to ensure electromagnetic compatibility (EMC): Do not only ground the device via the protective earth conductor of the supply cable. Instead, the functional grounding must also be connected to the process connection (flange or threaded connection) or to the external ground terminal.

An easily accessible power switch must be installed in the proximity of the device. The power switch must be marked as a disconnector for the device (IEC/EN61010).

Connection examples for the switch output

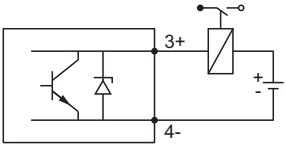

A0015909

13 Connection of a relay

Suitable relays (examples):
- Solid-state relay: Phoenix Contact OV-24DC/480AC/5 with mounting rail connector UMK-1 OM-R/AMS
- Electromechanical relay: Phoenix Contact PLC-RSC-12DC/21

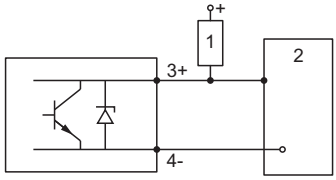

A0015910

14 Connection of a digital input

1 Pull-up resistor
2 Digital input

For optimum interference immunity we recommend to connect an external resistor (internal resistance of the relay or Pull-up resistor) of < 1 000 Ω.

7.1.2 Cable specification

For ambient temperature $T_U \geq 60$ °C (140 °F): use cable for temperature T_U +20 K.

HART

- A normal device cable suffices if only the analog signal is used.
- A shielded cable is recommended if using the HART protocol. Observe grounding concept of the plant.
- For 4-wire devices: Standard device cable is sufficient for the power line.

7.1.3 Device plug connectors

For the versions with fieldbus plug connector (M12 or 7/8"), the signal line can be connected without opening the housing.

Pin assignment of the M12 plug connector

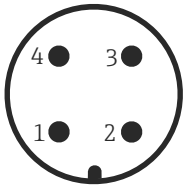

A0011175

Pin	Meaning
1	Signal +
2	not connected
3	Signal -
4	Ground

Pin assignment of the 7/8" plug connector

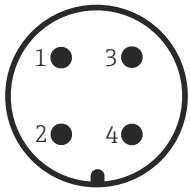

A0011176

Pin	Meaning
1	Signal -
2	Signal +
3	Not connected
4	Screen

7.1.4 Power supply

2-wire, 4-20mA HART, passive

<table>
<tr><th>"Power Supply, Output" [1]</th><th>"Approval" [2]</th><th>Terminal voltage U at the device</th><th>Maximum load R, depending on the supply voltage U_0 at the supply unit</th></tr>
<tr><td rowspan="4">A: 2-wire; 4-20mA HART</td><td>▪ Non-Ex
▪ Ex nA
▪ CSA GP</td><td>11.5 to 35 V [3]</td><td rowspan="3">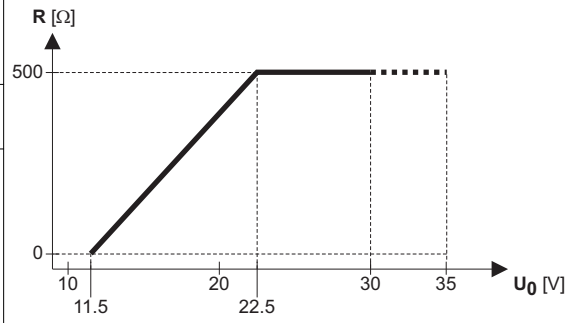
</td></tr>
<tr><td>Ex ic</td><td>11.5 to 32 V [3]</td></tr>
<tr><td>Ex ia / IS</td><td>11.5 to 30 V [3]</td></tr>
<tr><td>▪ Ex d / XP
▪ Ex ic(ia)
▪ Ex tD / DIP</td><td>13.5 to 30 V [4]</td><td>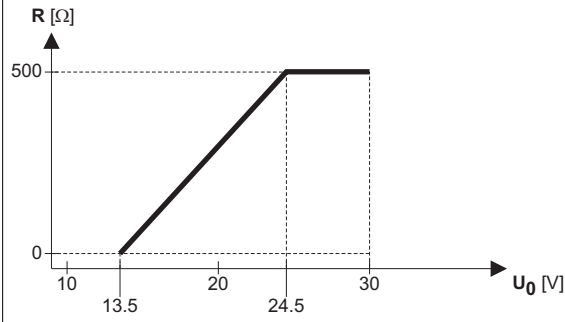
</td></tr>
</table>

1) Feature 020 of the product structure
2) Feature 010 of the product structure
3) For ambient temperatures $T_a \leq$ -30 °C (-22 °F) a minimum voltage of 14 V is required for the sartup of the device at the MIN error current (3,6 mA). The startup current can be parametrized. If the device is operated with a fixed current I ≥ 4,5 mA (HART multidrop mode), a voltage of U ≥ 11,5 V is sufficient throughout the entire range of ambient temperatures.
4) For ambient temperatures $T_a \leq$ -20 °C (-4 °F) a minimum voltage of 16 V is required for the startup of the device at the MIN error current (3.6 mA).

"Power Supply, Output" [1]	"Approval" [2]	Terminal voltage U at the device	Maximum load R, depending on the supply voltage U_0 at the supply unit
B: 2-wire; 4-20 mA HART, switch output	▪ Non-Ex ▪ Ex nA ▪ Ex nA(ia) ▪ Ex ic ▪ Ex ic(ia) ▪ Ex d(ia) / XP ▪ Ex ta / DIP ▪ CSA GP	12 to 35 V [3]	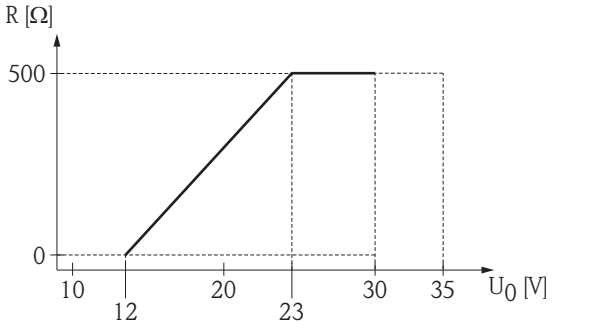
	▪ Ex ia / IS ▪ Ex ia + Ex d(ia) / IS + XP	12 to 30 V [3]	

1) Feature 020 of the product structure
2) Feature 010 of the product structure
3) For ambient temperatures $T_a \leq$ -30 °C (-22 °F) a minimum voltage of 14 V is required for the startup of the device at the MIN error current (3.6 mA).

"Power Supply, Output" [1]	"Approval" [2]	Terminal voltage U at the device	Maximum load R, depending on the supply voltage U_0 at the supply unit
C: 2-wire; 4-20mA HART, 4-20mA	alle	**Channel 1:** 13.5 to 30 V [3]	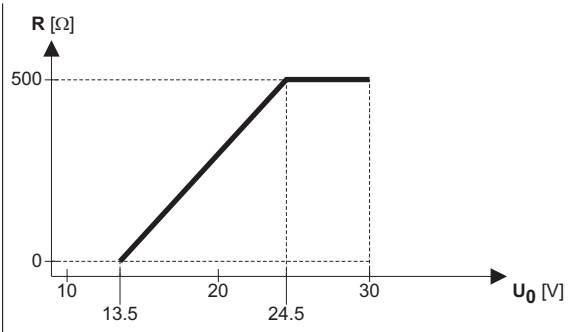
		Channel 2: 12 to 30 V	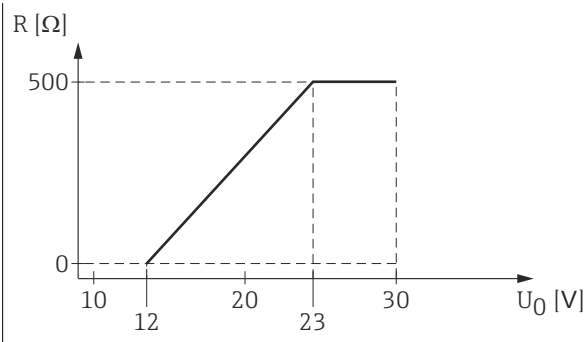

1) Feature 020 of the product structure
2) Feature 010 of the product structure
3) For ambient temperatures $T_a \leq$ -30 °C (-22 °F) a minimum voltage of 16 V is required for the startup of the device at the MIN error current (3.6 mA).

Polarity reversal protection	Yes
Admissible residual ripple at f = 0 to 100 Hz	U_{SS} < 1 V
Admissible residual ripple at f = 100 to 10000 Hz	U_{SS} < 10 mV

4-wire, 4-20mA HART, active

"Power supply; Output" [1]	Terminal voltage	Maximum load R_{max}
K: 4-wire 90-253VAC; 4-20mA HART	90 to 253 V_{AC} (50 to 60 Hz), overvoltage category II	500 Ω
L: 4-wire 10,4-48VDC; 4-20mA HART	10.4 to 48 V_{DC}	

1) Feature 020 of the product structure

7.1.5 Overvoltage protection

If the measuring device is used for level measurement in flammable liquids which requires the use of overvoltage protection according to DIN EN 60079-14, standard for test procedures 60060-1 (10 kA, pulse 8/20 µs), overvoltage protection has to be ensured by an integrated or external overvoltage protection module.

Integrated overvoltage protection

An integrated overvoltage protection module is available for 2-wire HART as well as PROFIBUS PA and FOUNDATION Fieldbus devices.

Product structure: Feature 610 "Accessory mounted", option NA "Overvoltage protection".

Technical data	
Resistance per channel	2 * 0.5 Ω max
Threshold DC voltage	400 to 700 V
Threshold impulse voltage	< 800 V
Capacitance at 1 MHz	< 1.5 pF
Nominal arrest impulse voltage (8/20 µs)	10 kA

External overvoltage protection

HAW562 or HAW569 from Endress+Hauser are suited as external overvoltage protection.

For detailed information please refer to the following documents:
- HAW562: TI01012K
- HAW569: TI01013K

7.2 Connecting the device

⚠ WARNING

Explosion hazard!

- ▶ Comply with the relevant national standards.
- ▶ Observe the specifications in the Safety Instructions (XA).
- ▶ Only use the specified cable glands.
- ▶ Check whether the supply voltage matches the specifications on the nameplate.
- ▶ Before connecting the device: Switch the supply voltage off.
- ▶ Before switching on the supply voltage: Connect the potential bonding line to the exterior ground terminal.

Required tools and accessories:

- For instruments with safety pin for the lid: AF 3 Allen key
- Wire stripping pliers
- When using stranded wires: Wire end sleeves.

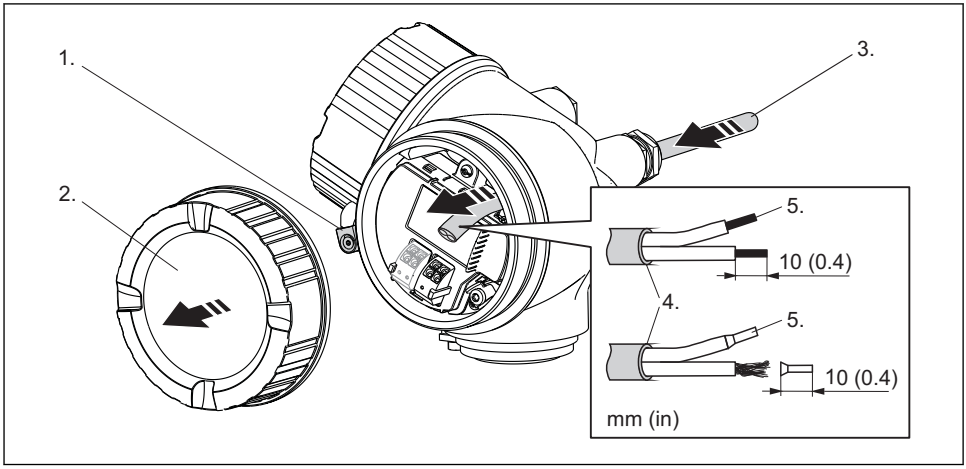

A0012619

1. Loosen the screw of the securing clamp of the connection compartment cover and turn the clamp 90° counterclockwise.
2. Unscrew the connection compartment cover.
3. Push the cable through the cable entry. To ensure tight sealing, do not remove the sealing ring from the cable entry.
4. Strip the cable.
5. Strip the cable ends 10 mm (0.4 in). For stranded cables, also attach wire end ferrules.
6. Firmly tighten the cable glands.

7.

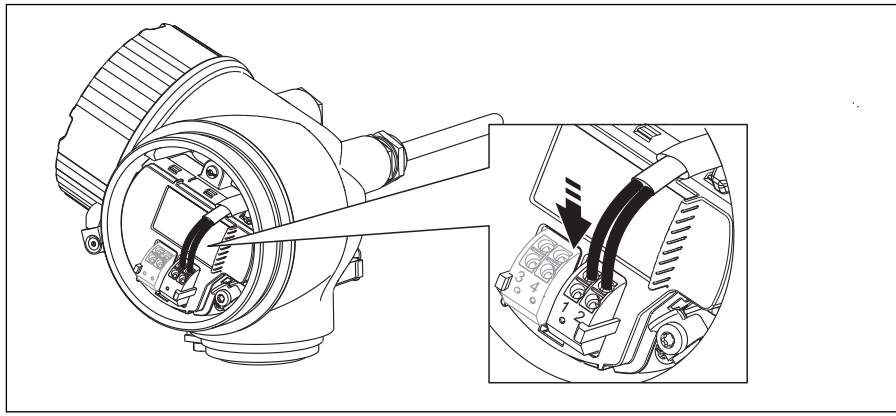

A0013837

Connect the cable in accordance with the terminal assignment (→ 36).

8. When using screened cable: Connect the cable screen to the ground terminal.
9. Screw the cover onto the connection compartment.
10. For instruments with safety pin for the lid: Adjust the safety pin so that its edge is over the edge of the display lid. Tighten the safety pin.

7.2.1 Pluggable spring-force terminals

Instruments without integrated overvoltage protection have pluggable spring-force terminals. Rigid conductors or flexible conductors with cable sleeve can directly be inserted and are contacted automatically.

To remove cables from the terminal: Press on the groove between the terminals using a flat-tip screwdriver ≤ 3 mm (0.12 inch) while pulling the cables out of the terminals.

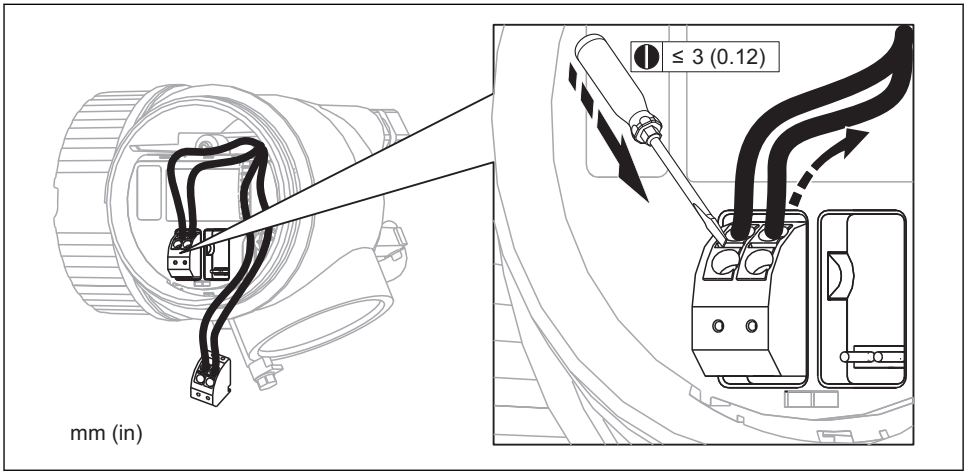

A0013661

7.3 Post-connection check

❍	Are cables or the device undamaged (visual inspection)?
❍	Do the cables comply with the requirements?
❍	Do the cables have adequate strain relief?
❍	Are all cable glands installed, firmly tightened and correctly sealed?
❍	Does the supply voltage match the specifications on the transmitter nameplate?
❍	Is the terminal assignment correct (→ 🖹 36)?
❍	If required: Is the protective earth connected correctly (→ 🖹 36)?
❍	If supply voltage is present: Is the device ready for operation and do values appear on the display module?
❍	Are all housing covers installed and firmly tightened?
❍	Is the securing clamp tightened correctly?

8 Commissioning (via operating menu)

8.1 Display and operating module

8.1.1 Display appearance

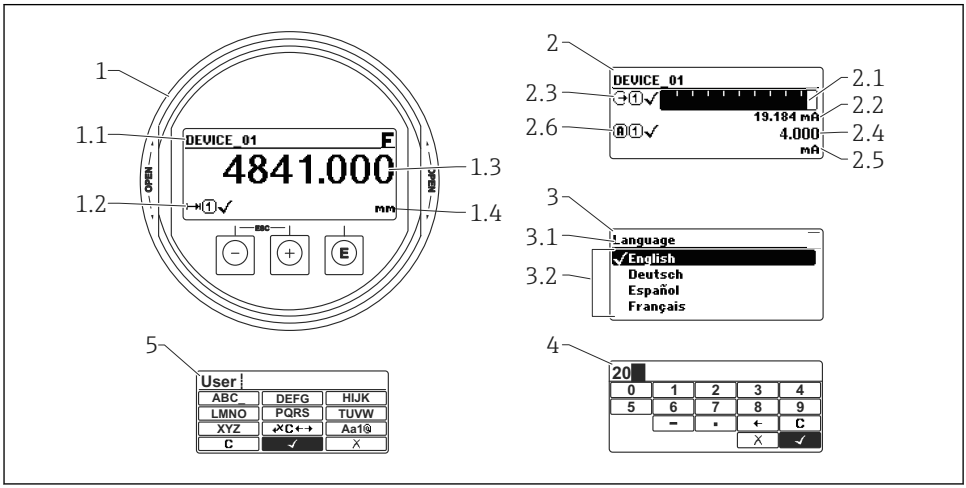

A0012635

15 Appearance of the display and operation module for on-site operation

1 Measured value display (1 value max. size)
1.1 Header containing tag and error symbol (if an error is active)
1.2 Measured value symbols
1.3 Measured value
1.4 Unit
2 Measured value display (1 bargraph + 1 value)
2.1 Bargraph for measured value 1
2.2 Measured value 1 (including unit)
2.3 Measured value symbols for measured value 1
2.4 Measured value 2
2.5 Unit for measured value 2
2.6 Measured value symbols for measured value 2
3 Representation of a parameter (here: a parameter with selection list)
3.1 Header containing parameter name and error symbol (if an error is active)
3.2 Selection list; ☑ marks the current parameter value.
4 Input matrix for numbers
5 Input matrix for alphanumeric and special characters

8.1.2 Operating elements

Key	Meaning
 A0013969	**Minus key** *For menu, submenu* Moves the selection bar upwards in a picklist. *For text and numeric editor* In the input mask, moves the selection bar to the left (backwards).
 A0013970	**Plus key** *For menu, submenu* Moves the selection bar downwards in a picklist. *For text and numeric editor* In the input mask, moves the selection bar to the right (forwards).
 A0013952	**Enter key** *For measured value display* ▪ Pressing the key briefly opens the operating menu. ▪ Pressing the key for 2 s opens the context menu. *For menu, submenu* ▪ Pressing the key briefly Opens the selected menu, submenu or parameter. ▪ Pressing the key for 2 s for parameter: If present, opens the help text for the function of the parameter. *For text and numeric editor* ▪ Pressing the key briefly – Opens the selected group. – Carries out the selected action. ▪ Pressing the key for 2 s confirms the edited parameter value.
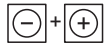 A0013971	**Escape key combination (press keys simultaneously)** *For menu, submenu* ▪ Pressing the key briefly – Exits the current menu level and takes you to the next higher level. – If help text is open, closes the help text of the parameter. ▪ Pressing the key for 2 s returns you to the measured value display ("home position"). *For text and numeric editor* Closes the text or numeric editor without applying changes.
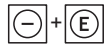 A0013953	**Minus/Enter key combination (press and hold down the keys simultaneously)** Reduces the contrast (brighter setting).
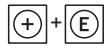 A0013954	**Plus/Enter key combination (press and hold down the keys simultaneously)** Increases the contrast (darker setting).
 A0013955	**Minus/Plus/Enter key combination (press and hold down the keys simultaneously)** *For measured value display* Enables or disables the keypad lock.

8.1.3 Opening the context menu

Using the context menu, the user can call up the following menus quickly and directly from the operational display:

- Setup
- Conf. backup disp.
- Simulation

Calling up and closing the context menu

The user is in the operational display.

1. Press E for 2 s.
   ↳ The context menu opens.

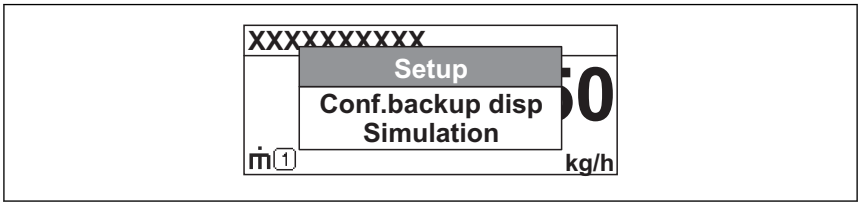

A0014003-EN

2. Press − + + simultaneously.
   ↳ The context menu is closed and the operational display appears.

Calling up the menu via the context menu

1. Open the context menu.
2. Press + to navigate to the desired menu.
3. Press E to confirm the selection.
   ↳ The selected menu opens.

8.2 Operating menu

Parameter/Submenu	Meaning	Description
Language [1]	Defines the operating language of the on-site display.	BA01004F (Operating Instructions FMP56/ FMP57, HART)
Setup	When appropriate values have been assigned toall setup parameters, the measured should be completely configured in a standard application.	
Setup→Mapping	Interference echo suppression	
Setup→Advanced setup	Contains further submenus and parameters: ▪ to adapt the device to special measuring conditions. ▪ to process the measured value (scaling, linearization). ▪ to configure the signal output.	
Diagnostics	Contains the most important parameters needed to detect and analyze operational errors.	
Expert [2]	Contains all parameters of the device (including those which are already contained in one of the above submenus). This menu is organized according to the function blocks of the device.	GP0100F/00/DE (Description of Device Parameters FMP5x, HART)

1) In case of operation via operating tools (e.g. FieldCare), the "Language" parameter is located at "Setup→Advanced setup→Display"
2) On entering the "Expert" menu, an access code is always requested. If a customer specific access code has not been defined, "0000" has to be entered.

8.3 Unlock the device

If the device has been locked, it must be unlocked before the measurement can be configured.

For details refer to the Operating Instructions of the device:
BA01004F (FMP56/FMP57, HART)

8.4 Setting the operating language

Factory setting: English or ordered local language

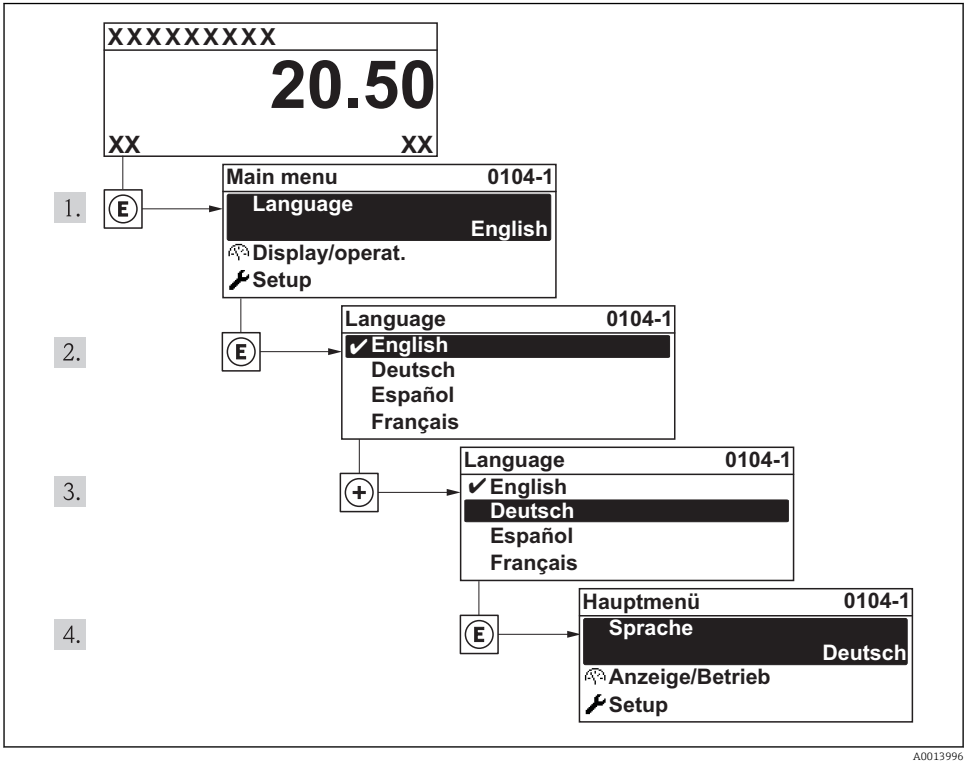

16 *Taking the example of the local display*

8.5 Configuration of a level measurement

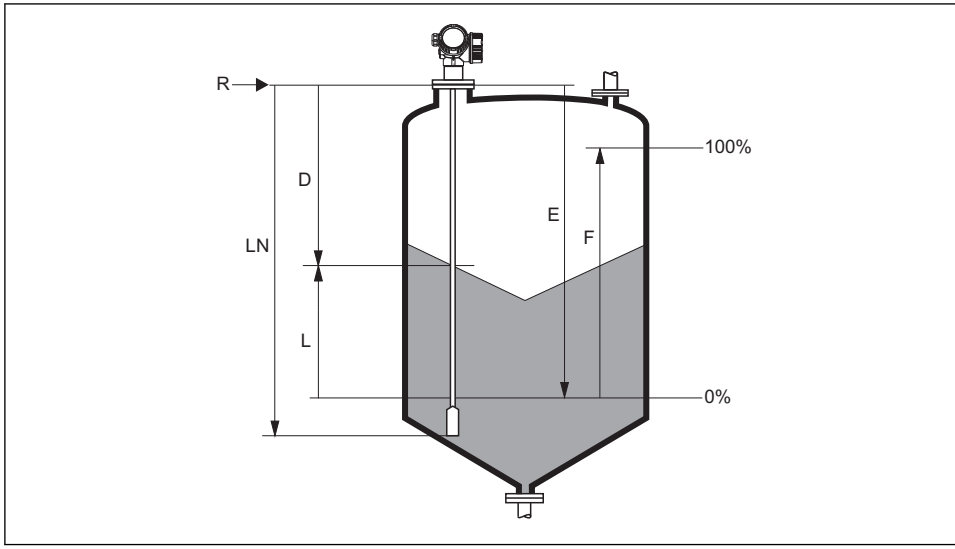

17 *Configuration parameters for level measurements in solids*

LN = Length of probe
D = Distance
L = Level
R = Reference point of the measurement
E = Empty calibration (= Zero point)
F = Full calibration (= span)

1. **Setup → Device tag**
   ↳ Enter tag for measuring point.
2. **Setup → Distance unit**
   ↳ Select distance unit.
3. **Setup → Bin type**
   ↳ Select bin property.
4. **Setup → Empty calibration**
   ↳ Enter the distance E between the reference point R and the minimum level (0%).
5. **Setup → Full calibration**
   ↳ Enter distance F between the minimum (0%) and maximum (100%) level.
6. **Setup → Level**
   ↳ Displays the measured level L.
7. **Setup → Distance**
   ↳ Displays the distance D between the reference point R and the level L.

8. **Setup → Signal quality**
   ↳ Displays the signal quality of the level echo.
9. **Setup → Mapping → Confirm distance**
   ↳ Compare the displayed distance to the real distance in order to start the recording of the mapping curve.

8.6 User-specific applications

For details of setting the parameters of user-specific applications, see separate documentation:
BA01004F/00/DE (Operating Instructions FMP56/FMP57, HART)

For the **Expert** submenu refer to:
GP01000F/00/DE (Description of Device Parameters FMP5x, HART)



www.addresses.endress.com

Endress+Hauser

People for Process Automation