Technical Information
TI 360F/00/en

Level Limit Switch
nivotester FTL 375 P

With intrinsically safe signal circuit for connection to Liquiphant, Soliphant and Nivopuls measuring cells

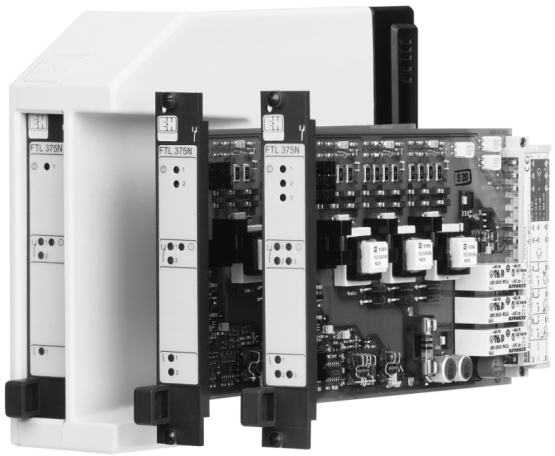

Applications

- Level limit detection in liquid tanks and bulk material silos, also in hazardous explosion areas
- For Zone 0 or Zone 20 measuring cells
- Liquid detection in pipes for dry running protection for pumps
- Overspill protection for tanks with combustible or non-combustible liquids harmful to water
- Two-point control and level limit detection with one switching instrument
- Application in safety related systems with requirements for functional safety up to SIL3 in accordance to IEC 61508 when using Liquiphant M/S with electronic insert FEL 57

Your benefits

- Nivotester FTL 375 P for connecting one, two or three measuring cells (1-, 2- or 3-channel devices).
- Intrinsically safe signal circuits [EEx ia] for installing measuring cells in explosion hazardous areas.
- Functional safety to SIL (see also Functional Safety manual SD 113F) through the use of:
  - fail-safe PFM technology
  - line monitoring through to sensor
  - Monitoring for corrosion on tuning forks of Liquiphant M and Liquiphant S (HT) measuring cells
  - Simplified iterative testing to WHG when Liquiphant M or Liquiphant S (HT) connected: at the press of a button
- Racksyst plug-in card in Europa card format to DIN 41494, 4 HP wide, 3 HU high
- Same device for mounting either in 19" assembly rack or single Monorack housing for 1-channel and 2-channel devices
- Intensive quality control measures: from isolating amplifier through to measuring cell
- Inputs are galvanically isolated from each other, from the mains and from the outputs
- compatible with Nivotester FTL 370/ FTL 372
- additional binary outputs

Endress+Hauser
The Power of Know How

Function and system design

Measuring principle

Signal transmission

The intrinsically safe signal inputs of the Nivotester FTL 375 P limit switch are galvanically isolated from each other, from the mains and from the outputs.
The Nivotester supplies direct current to the Liquiphant, Nivopuls or Soliphant measuring cells via two-wire cabling and receives a frequency which indicates whether the limit has been reached or not. The supply current is superimposed by the transmitters with current pulses (PFM signals) which have a pulse width of approx. 200 µs and a current intensity of approx. 10 mA.

Signal evaluation

The Nivotester evaluates the frequency and switches the output relay for the level alarm. At the same time the binary output transistor, which is parallel to the relay, switches. The switching state of the relay is displayed on the front panel of the Nivotester by means of a yellow light emitting diode.

Fail-safe circuit

By selecting the "Maximum / Minimum" fail-safe circuit (the hook switch closes or opens), the output relay or the transistor outputs always operate safely in quiescent current.

- Maximum safety: The relay drops off or the transistor output is disabled when the switch point is exceeded (measuring cell covered), a fault occurs or the line voltage fails.
- Minimum safety: The relay drops off or the transistor output is disabled when the switch point is undershot (measuring cell uncovered), a fault occurs or the line voltage fails.

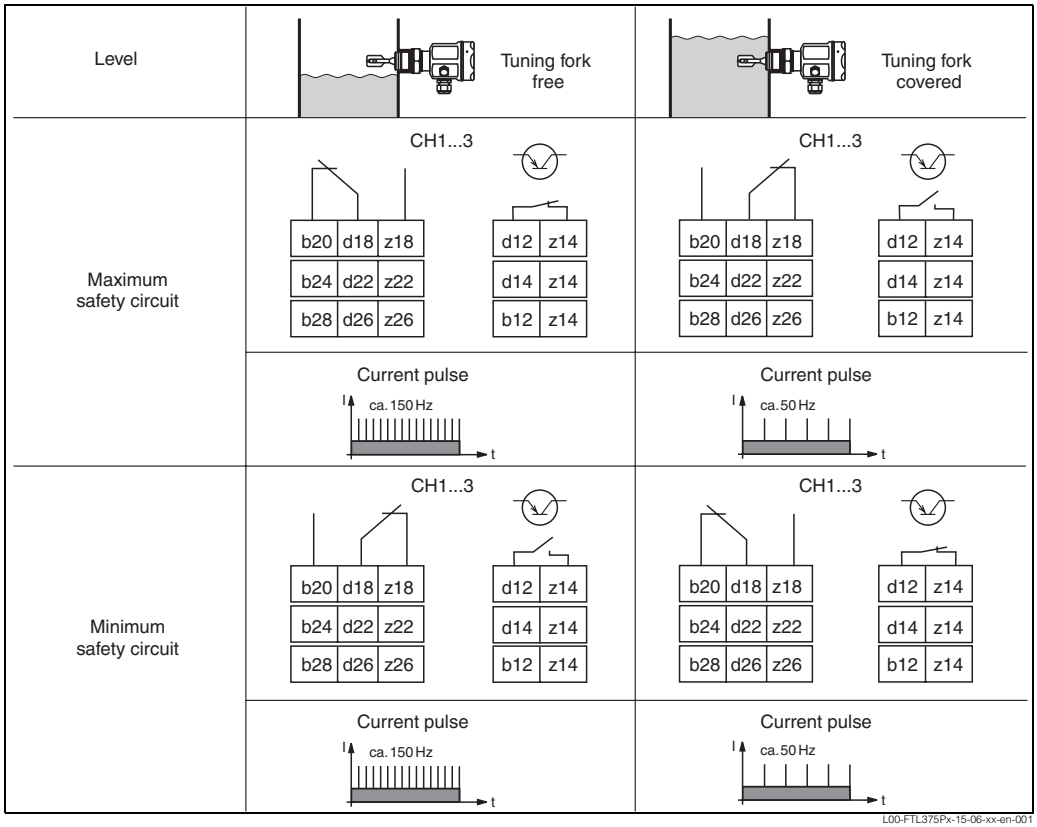

Function of limit signal and current pulse depends on level and fail-safe circuit.

With applications requiring functional safety in compliance with IEC 61508 (SIL), please refer to Functional Safety manual SD 113F.

Function monitoring

To increase operational safety the Nivotester is equipped with a function monitoring facility. A fault is indicated by a red LED and disables the relay for the level alarm and binary output for the channel involved. In addition, a fault is always signaled via a separate binary output. If the Nivotester receives no more current pulses, a fault is signaled. For example, this occurs if there is a short-circuit or interruption in the signal line to the measuring cell, corrosion on the tuning fork of a Liquiphant, a defect in the measuring cell electronics or a defect in the Nivotester input circuit. The function monitoring feature can be carried out for each channel by pressing the test button. During this process, power supply is interrupted to the sensor.

Simplified iterative testing on Liquiphant M or Liquiphant S (HT)

Regular function checks are stipulated for overspill protection features. The Nivotester and downstream plant sections can be equipped with a function test which does not require starting or removing the sensor. The Nivotester is then fitted with a test button for each signal input on the front panel. The poser supply is interrupted when the test button is pressed. When the button is released, power is restored to the Liquiphant by means of FEL 57 and the test process starts. See the quick-start manuals for detailed information: KA 174F, KA 175F, KA 176F.

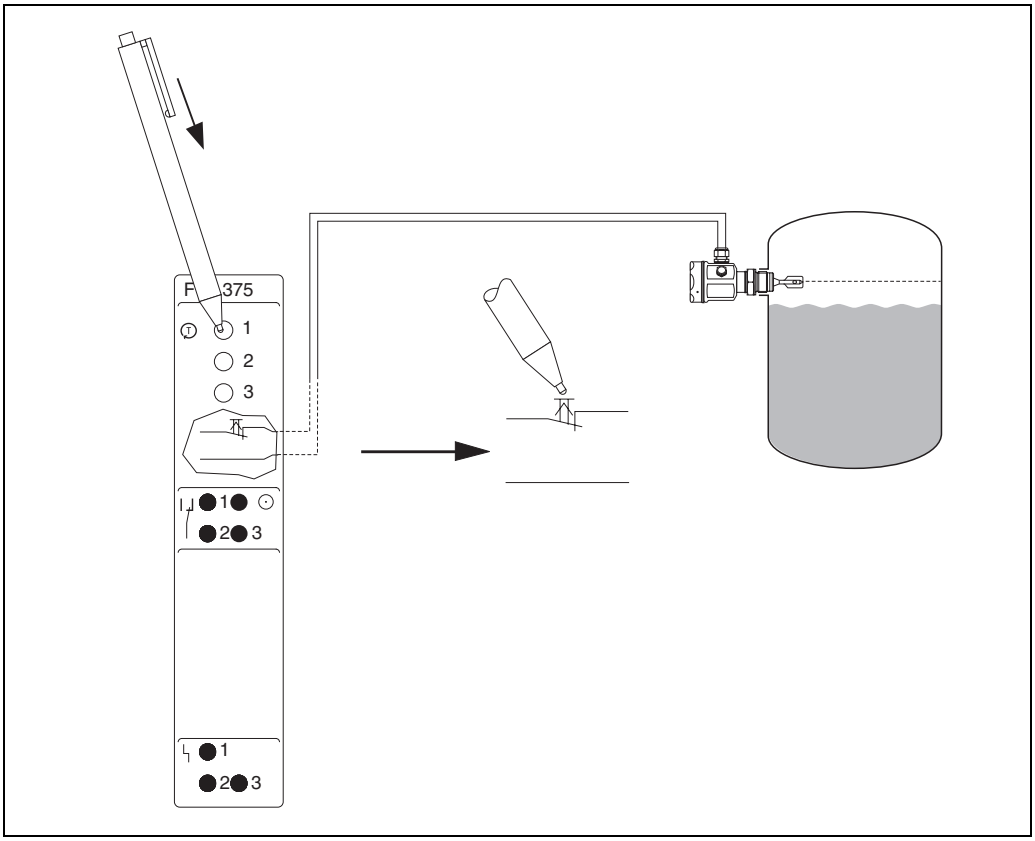

L00-FTL375xx-19-06-xx-xx-001

Two-point control (Δs)

The 2-channel and 3-channel Nivotesters can carry out two-point control in a tank (e.g. to control a pump). The switching hysteresis is defined by the mounting location of the two measuring cells.

Measuring device

A simple measuring device consists of one to three measuring cells, a 1-, 2- or 3-channel Nivotester and control or signaling devices. The measuring cells used can be the Liquiphant M, Liquiphant S (high temperature - HT), Nivopuls or Soliphant.

1-channel Nivotester FTL 375 P-###1

The measuring device of the single-channel device comprises:

– 1 measuring cell
– 1-channel Nivotester
– Control or signaling devices

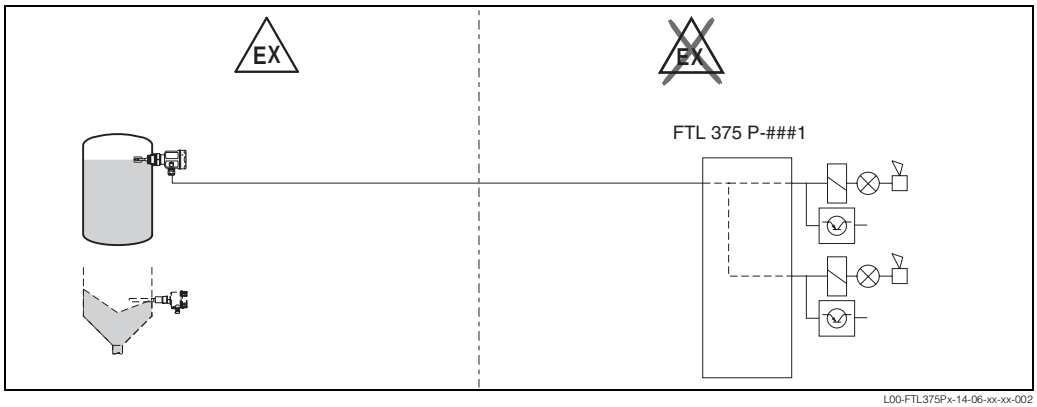

L00-FTL375Px-14-06-xx-xx-002

2-channel Nivotester FTL 375 P-###2

The measuring device of the two-channel device comprises:

– 2 measuring cells
– 2-channel Nivotester
– Control or signaling devices

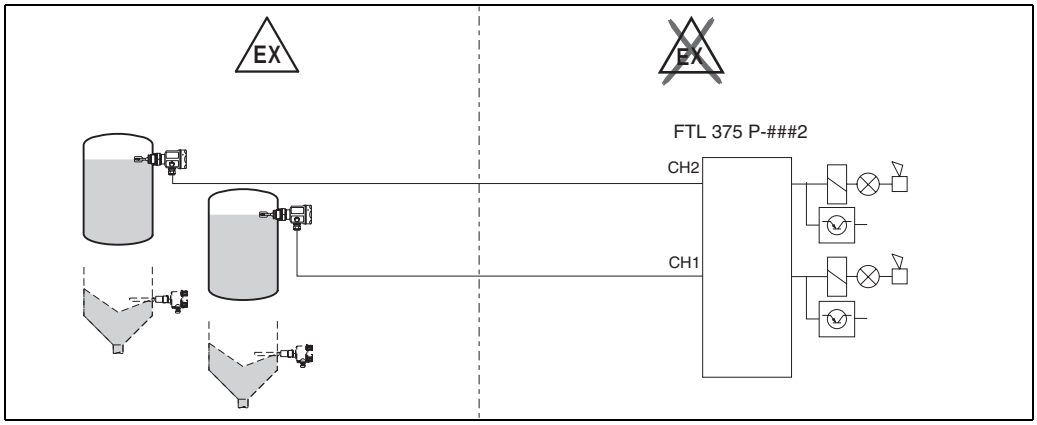

L00-FTL375Px-14-06-xx-xx-003

3-channel Nivotester FTL 375 P-###3

There are five possible variants of the measuring device for the three-channel device.
If all 3 channels are used for limit measurement, the measuring device comprises:

– 3 measuring cells
– 3-channel Nivotester
– Control or signaling devices

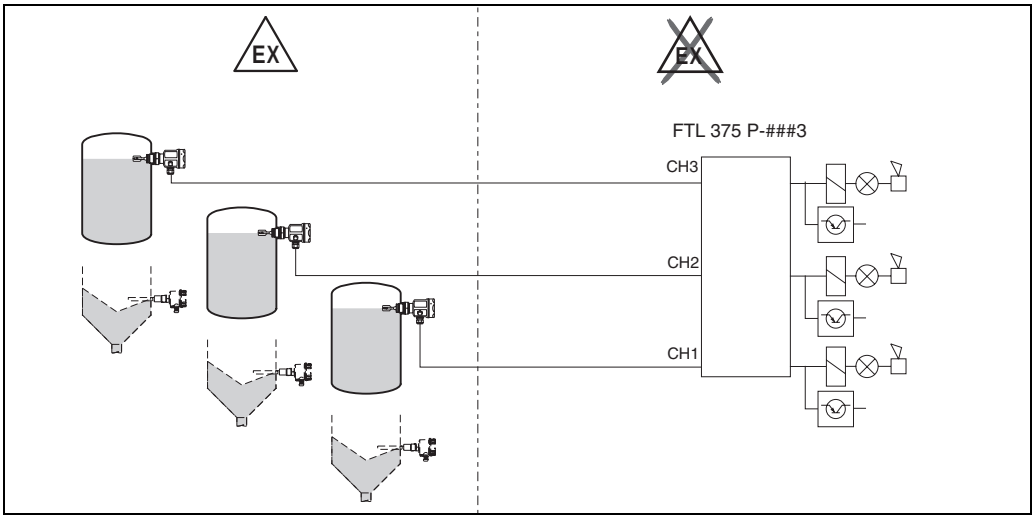

Two-point control Δs with 2- or 3-channel Nivotester FTL 375 P-###2 or FTL 375 P-###3

If the CH1 and CH2 channels are used for two-point control Δs on the 2- and 3-channel devices, the measuring device comprises:

– 2 measuring cells
– 2-channel or 3-channel Nivotester
– Control or signaling devices

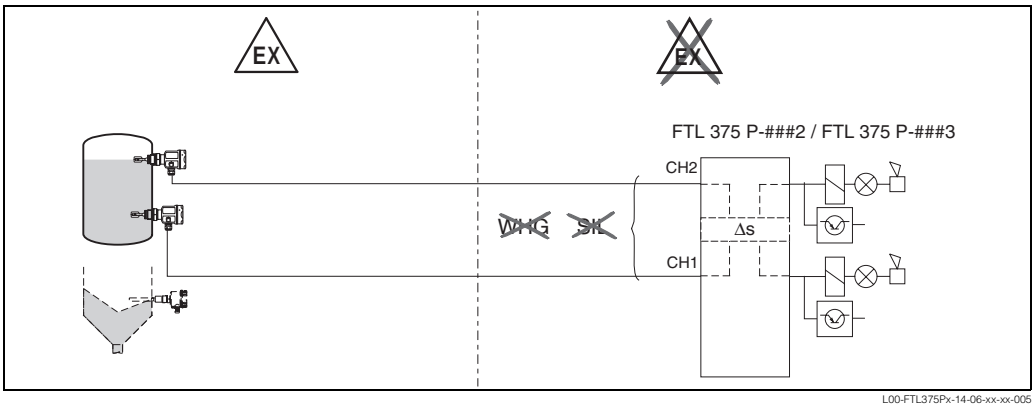

Control variants for 3-channel Nivotester FTL 375 P-###3

1. If the CH1 und CH2 channels are used for two-point control Δs and the CH3 channel for overspill protection, the measuring device comprises:

   – 3 measuring cells
   – 3-channel Nivotester
   – Control or signaling devices

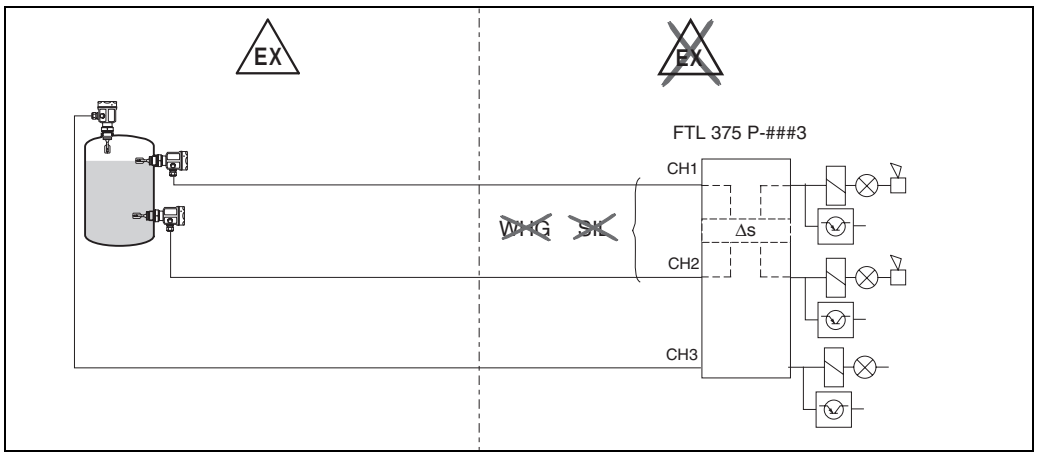

2. If the CH1 channel is used for level measurement with 2 limit relays and the CH3 channel for further limit measurement, the measuring device comprises:

   – 2 measuring cells
   – 3-channel Nivotester
   – Control or signaling devices

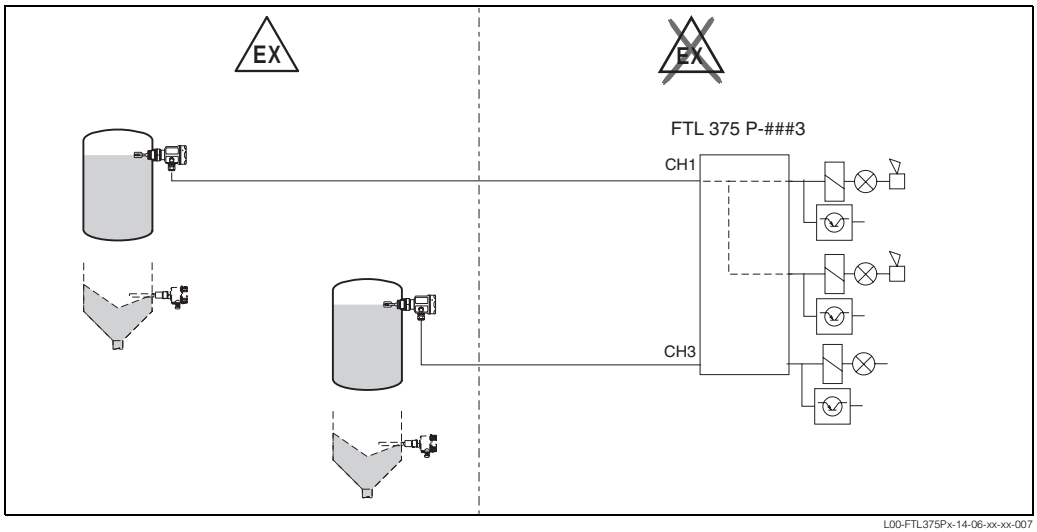

3. If the CH1 channel is used for level measurement with 2 limit relays, the measuring device comprises:

   – 1 measuring cell
   – 3-channel Nivotester
   – Control or signaling devices

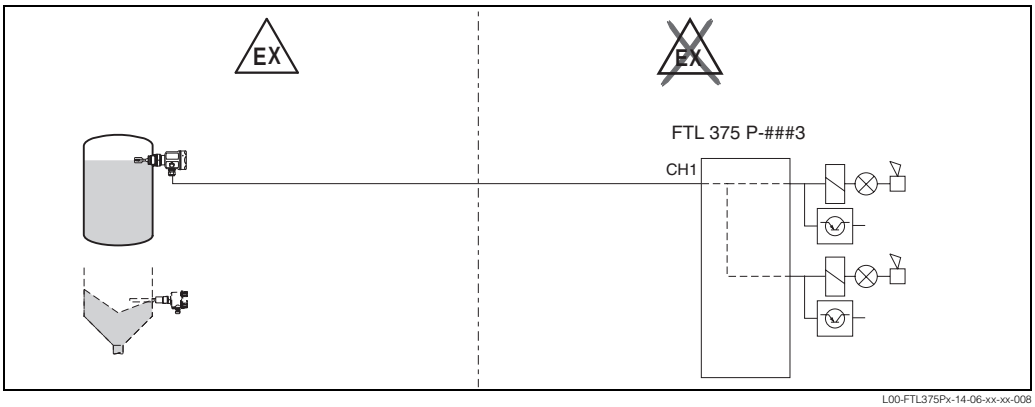

Input parameters

Measured variable	The limit signal is generated at minimum or maximum level, depending on the selection
Measuring range	The measuring range is dependent on the mounting location of the sensors
Input signal	• Input FTL 375 P: galvanically isolated from power supply and output • Type of protection: instrinsic safety [EEx ia] IIC • Connectable measuring cells: – Liquiphant DL 17 Z with electronic insert EL 17 Z – Liquiphant II FDL 30, FDL 31, FDL 35, FDL 36 with electronic insert FEL 37 – Liquiphant M FTL 50/51, FTL 50 H/51 H, FTL 51 C with electronic insert FEL 57 – Liquiphant S (HT) FTL 70/71 with electronic insert FEL 57 – Soliphant DM 90 Z, DM 91 Z, DM 92 Z with electronic insert EM 17 Z – Soliphant II FTM 30 S, FTM 31 S, FTM 32 S with electronic insert FEM 37 – Nivopuls FDU 10 C, FDU 10 S • Power supply of measuring cells: by means of Nivotester FTL 375 P • Connecting line: wire pair, screening not required • Line resistance: max. 25 Ω per wire • Signal transmission: pulse frequency modulation (PFM)

Output parameters

Output signal

1-channel device:
- 2 relay outputs for a single channel (potential-free change-over contact for level alarm), two transistor outputs (transistor with galvanic isolation)

2-channel device:
- 2 relay outputs for two single channels (potential-free change-over contact for level alarm), two transistor outputs (transistor with galvanic isolation)

3-channel device:
- 3 relay outputs for three single channels (potential-free change-over contact for level alarm), three transistor outputs (transistor with galvanic isolation)

For all devices:
- quiescent current fail-safe circuit:
  minimum/maximum safety selectable by means of hook switches
- Switching delay: approx. 0.9 s
- Switching power of relay contacts:
  U~ max. 253 V
  I~ max. 2.5 A
  P~ max. 600 VA at cos $\varphi = 1$
  P~ max. 300 VA at cos $\varphi \geq 0.7$

  U– max. 100 V
  I– max. 2.5 A
  P– max. 100 W
  When simultaneously connected to low-voltage circuit with protected isolation:
  max. 50 V AC, 2.5 A
- Life: min. 10^5 switching cycles at maximum contact load
- Common fault output: Binary output (transistor with galvanic isolation)
  Input range of external power supply for binary outputs: 20...30 V DC
  Permissible residual ripple within tolerance: U_{ss} = max. 2 V
  Voltage at output signal high: typ. 24 V DC
  (depending on external power supply between 20...30 V DC)
  Voltage at output signal low: < 100 mV
  Max. current at output signal high: 500 mA
  short-circuit proof
- Function indicators: LEDs for operation, level alarm and error

Overvoltage category as per EN 61010

II

Protection class

II (double or increased isolation)

Signal on alarm

Limit relay dropped-out; fault message by means of red LEDs,
alarm relay dropped-out for FTL 375 P-###1, FTL 375 P-###2 and optionally for FTL 375 P-###3
Binary outputs disabled at limit value, binary outputs disabled on alarm

Galvanic isolation

All input and output channels and relay contacts are galvanically isolated from each other

Power supply

Electrical connection

Male multipoint connector

Plug-in connector as per DIN 41612, Part 3, design F

Use of measuring cell in explosion hazardous areas

Compliance with the national explosion protection regulations for the design and laying of intrinsically safe signal line is mandatory.
High-reliability values for capacitance and inductance are contained in the Safety Instructions XA 147F.

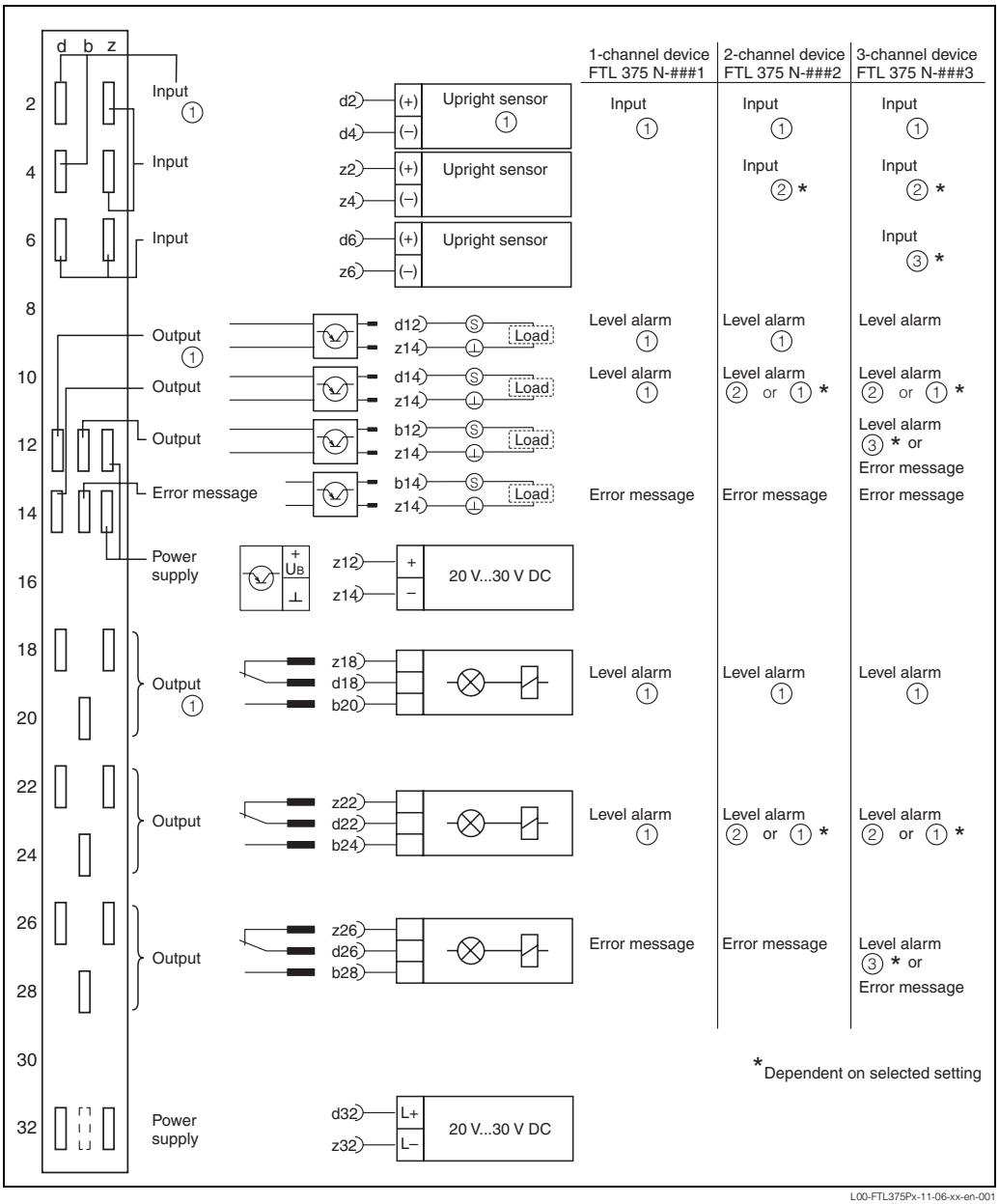

Supply voltage

Direct current version (DC):

- Voltage range: 20...30 V
- DC supply: max. 84 mA (1-channel)
- DC supply: max. 105 mA (2-channel)
- DC supply: max. 125 mA (3-channel)
- Permissible residual ripple within tolerance: U_{ss} = max. 2 V

Power consumption

1-channel: max. 2.52 W (at U_{max} 30 V)
2-channel: max. 3.15 W (at U_{max} 30 V)
3-channel: max. 3.80 W (at U_{max} 30 V)

Accuracy

Settling time/period

Final switching state after switching on power supply: approx. 10...40 s, dependent on connected measuring cell.
On Liquiphant M and Liquiphant S (HT) comply with self-test function of electronic insert FEL 57!

Operating conditions (installation conditions)

Installation instructions

Installation location

The Racksyst plug-in card, Nivotester FTL 375 P, must be installed in an assembly rack or in a protective housing outside the explosion hazardous area.
The following options are available:

- 19" assembly rack for mounting in control room for max. 21 plug-in cards (max 10 plug-in cards if all terminals are assigned).
  For more information, see TI 224F (Part no.: 017279-1000).
- 1/2-19" Racksyst field housing of protection degree IP65 for max.10 plug-in cards (max. 3 plug-in cards if all terminals are assigned).
  For more information, see TI 026F.
- Monorack II housing for 4 HP plug-in cards in degree of protection IP40 for mounting of 1- or 2-channel devices singly or in banks.
  For more information, see BA 090F (Part no.: 016046-0000).
- For mounting the Monorack housing outdoors, there is a protective housing IP55 available.
  For more information, see TI 099F (Part no.: 015140-0000).



L00-FTL375Nx-11-06-xx-xx-001

Orientation

Vertical in assembly rack.

Operating conditions (environmental conditions)

Installation location

Assembly rack for control room for mounting outdoors

Permissible ambient temperatures

Nominal operating range

- –20 °C...+70 °C

Storage temperature

- –25 °C...+85 °C (preferably at +20 °C)

Restrictions of ambient temperature when mounting in assembly rack (Racksyst II) and Monorack, see Supplementary Documentation.



Caution!
The devices should be installed in locations which are protected from direct solar radiation, weather and impacts. This is of particular importance in hot climates.

Climatic and mechanical application class

3K3
In acc. with DIN EN 60721-3-3

3M2
In acc. with DIN EN 60721-3-3

Degree of protection

Plug-in card IP00, front panel IP20

Electromagnetic Compatibility (EMC)

Interference Emission to EN 61326; Electrical Equipment Class B
Interference Immunity to EN 61326; Annex A (Industrial) and
NAMUR Recommendation NE 21 (EMC)

Mechanical construction

Design, dimensions

- Racksyst plug-in card to DIN 41494, t = 160 mm, h = 100 mm (Europa card format)
- Front panel made of black plastic with inserted blue field and handle with labeling strip
- Width: 4 modular units (20.3 mm); height: 3 height units (128.4 mm)
  Connection with male multipoint connector to DIN 41612, Part 3, design F, reduced 16-pin configuration for Monorack II (Racksyst II)
- Coding holes in male multipoint connector,
  FTL 375 P-###1: Pos. 2 and 14;
  FTL 375 P-###2: Pos. 2 and 17;
  FTL 375 P-###3: Pos. 2 and 18

Note!
100 mm = 3.94 in

Dimensions

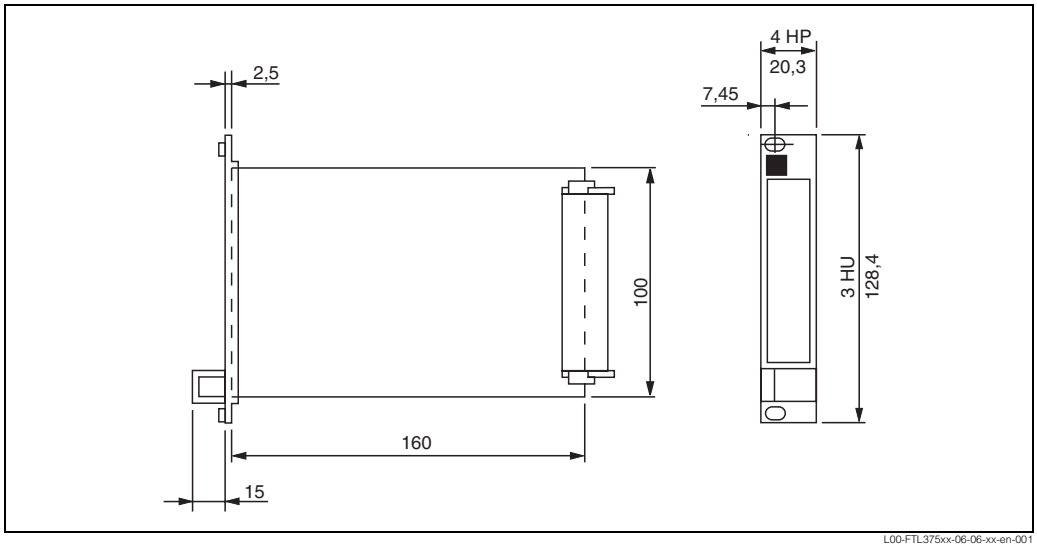

Dimensions of Europa card format

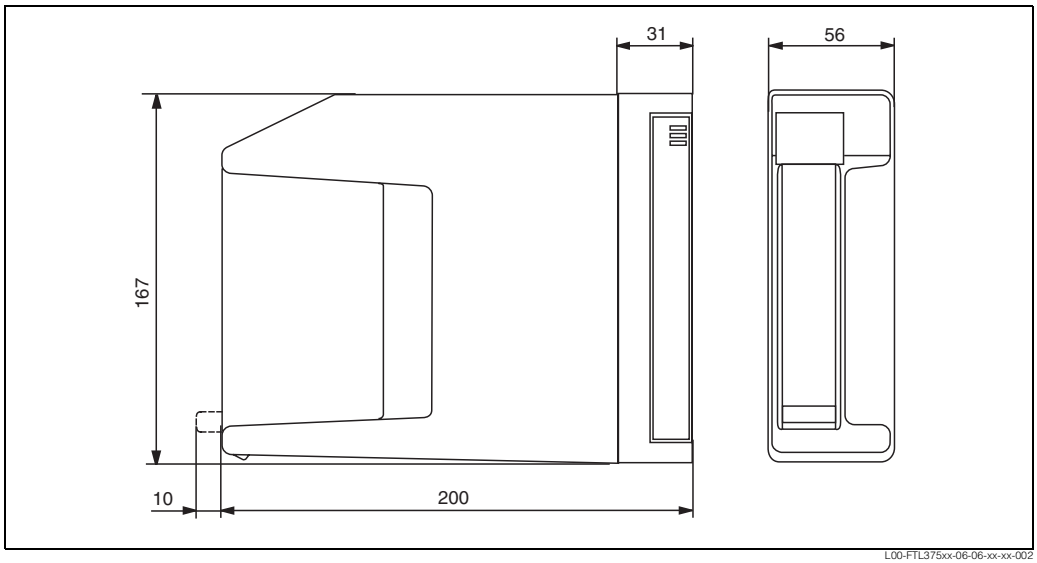

Dimensions of Monorack

Weight

- 1-channel: approx. 134 g
- 2-channel: approx. 146 g
- 3-channel: approx. 158 g

Materials

Front panel

Black plastic with inserted blue field and handle with labelling strip

Male multipoint connector

Electrical connection see page 9.
Arrangement of coding pin in female multipoint connector of Nivotester 1-channel, 2-channel and 3-channel devices

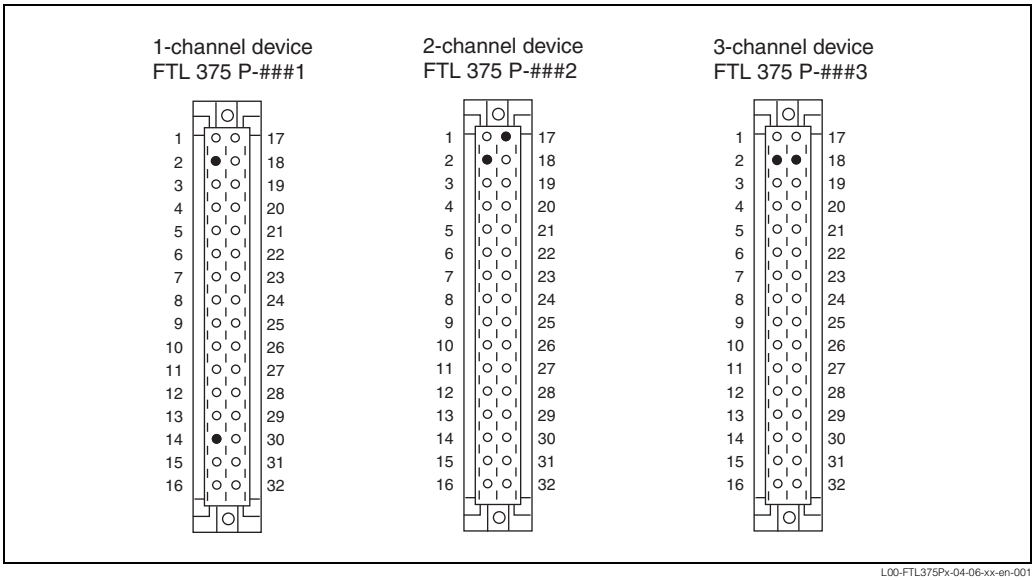

User interface

Operating concept

On-site configuration with hook switches on the board

Display elements

- Green LED: Standby
- Red LED per channel: Alarm
- Yellow LED per channel: Limit relay picked-up or transistor conductive

Operating elements

Hook switch for Min/Max setting per channel
Hook switch for Δs function
Hook switch for relay 3 or fault output
Hook switch for channel 1 and/or channel 2
Test button for each channel

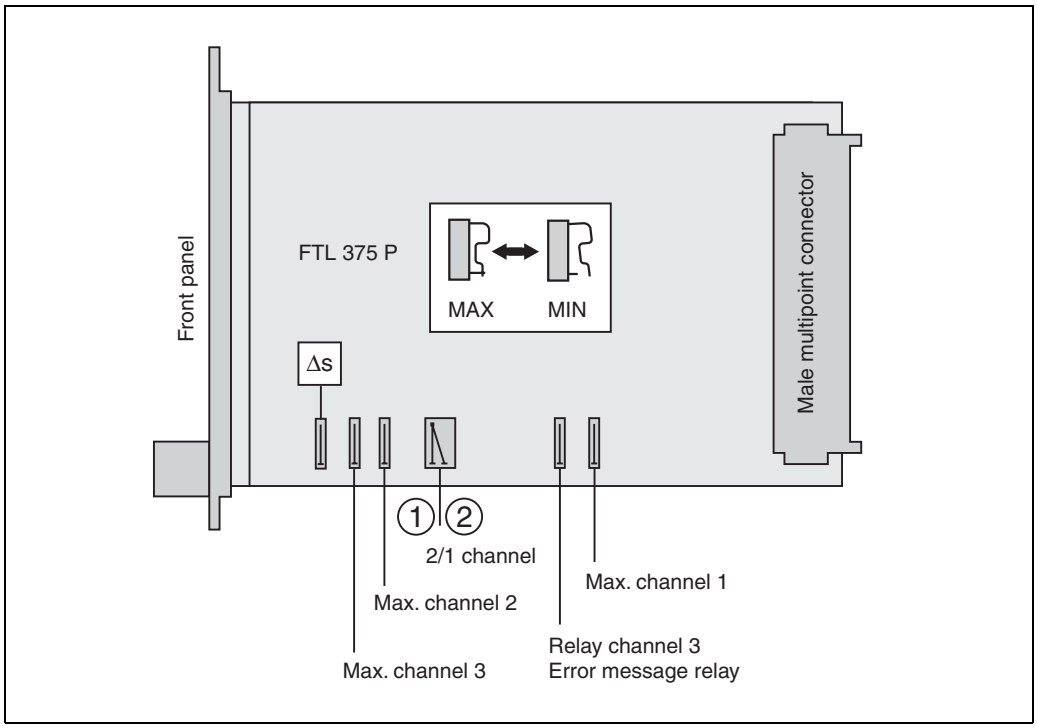

L00-FTL375Px-19-06-xx-en-001

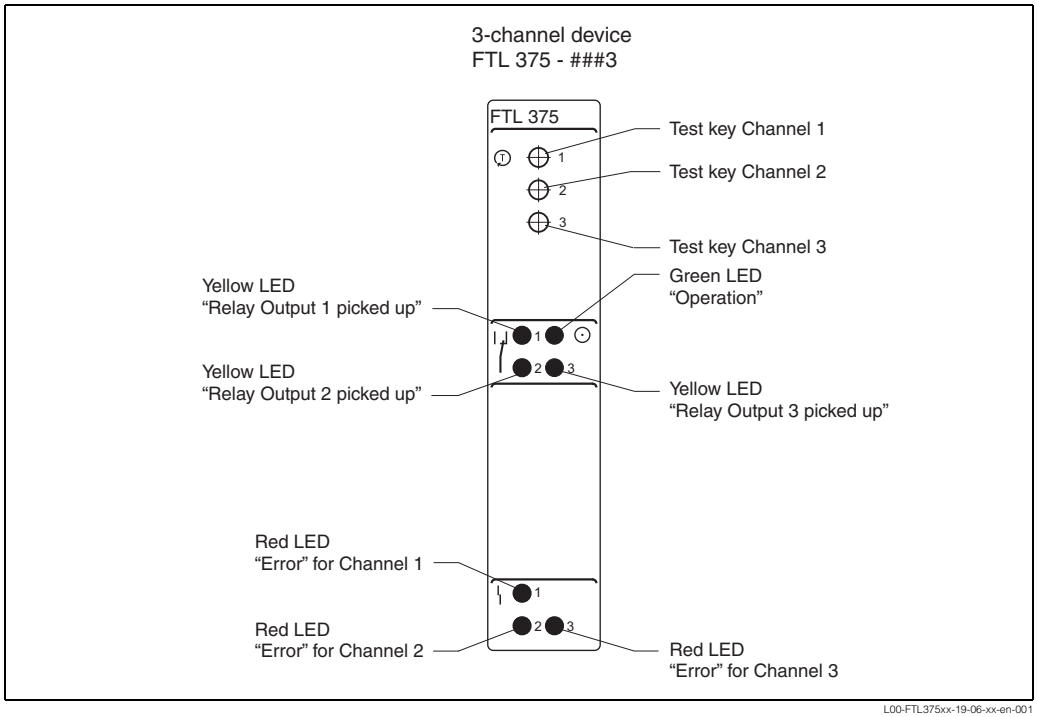

L00-FTL375xx-19-06-xx-en-001

Certificates and approvals

CE mark

The Nivotester meets all the statutory requirements arising from EC directives.
Endress+Hauser confirms the successful testing of the device by affixing the CE mark.

Ex approval

The Endress+Hauser Sales Centre will provide you with information on the current availability of versions for use in hazardous areas (ATEX [EEx ia]).
All the relevant data for explosion protection is contained in separate Ex documentation (see: Supplementary Documentation) which you can request.

Type of protection

[EEx ia] IIC

Overspill protection

WHG

External standards and regulations

External standards and regulations which were complied with during the conception and development of Nivotester FTL 375 P:

- EN 60529
  Degrees of protection through housing (IP code)
- EN 61010
  Safety regulations for electrical control and instrumentation devices and laboratory instruments
- EN 61326
  Interference Emission (Equipment Class B), Interference Immunity (Annex A - Industrial)
- IEC 61508
  Functional safety,
  safety-related electrical/electronic/programmable electronic systems (E/E/PES)
  DIN V 19250
  Basic safety considerations for measuring and control safety equipment
- EN 50020
  Electrical apparatus for explosion hazardous areas (instrinsic safety "i")
- EN 50014
  Electrical apparatus for explosion hazardous areas (general conditions)

Functional safety

SIL1 / SIL2 / SIL3 or Ak 2...6 in conjunction with Liquiphant M, Liquiphant S (HT) and electronic insert FEL 57 for protection functions such as overspill protection.
Refer to Functional Safety manual SD 113F!

Ordering information

Nivotester FTL 375 P

10	Certificates	
	F	ATEX II (1) GD [EEx ia] IIC, Overspill Protection to WHG
	H	ATEX II (1) GD [EEx ia] IIC, Overspill Protection to WHG, SIL2 (IEC 61508)

20		Version	
		1	Eurocard 19", 4 HP wide
		9	Special version

30			Power supply	
			E	Power supply 20... 30 V DC
			Y	Special version

40				Output	
				1	1x level SPDT + 1x alarm SPDT
				2	2x level SPDT + 1x alarm SPDT
				3	3x level SPDT
				9	Special version
FTL 375 P					Complete product name

Accessories

Protective housing

- Monorack II (4 HP) (for 1- and 2-channel devices)
- Monorack protective housing
- Racksyst assembly rack
- Racksyst field housing

Further particulars see page 10: Installation instructions

- Female multipoint connector for FTL 375 P-###1/2/3 (plug-in point installation kit 24/2)
  24S: TN 52012443
  24W: TN 52012444

Supplementary Documentation

System Information (SI)

- Racksyst system overview
  SI 008F/00/en
- Liquiphant M
  SI 040F/00/en

Technical Information (TI)

- Liquiphant M
  FTL 50/51, FTL 50 H/51 H
  Measuring cell for level limit detection in fluids
  TI 328F/00/en
- Liquiphant M
  FTL 51 C
  Measuring cell for level limit detection in fluids
  with highly corrosion-resistant coating
  TI 347F/00/en
- Liquiphant S (high temperature)
  FTL 70/71
  Measuring cell for level limit detection in fluids
  for fluid temperatures up to 280 °C
  TI 354F/00/en
- Soliphant T
  Low-cost vibration limit switch for fine-grained bulk goods
  TI 238F/00/en
- Soliphant II
  Universal vibration limit switch for fine-rained bulk goods
  TI 249F/00/en
- Nivopuls
  FDU 10 C
  Level limit switch for fluids; non-contact from exterior
  TI 248F/00/en
- Nivopuls
  FDU 10 S
  Level limit switch for fluids with separate electronics
  TI 275F/00/en
- Monorack II (for 1- and 2-channel devices)
  for mounting a single Nivotester in the control room
  TI 183F/00/en

Operating manual (KA)

1-channel:

- Nivotester
  FTL 375 P-###1
  Level limit switch with PFM input
  KA 174F/00/a6

2-channel:

- Nivotester
  FTL 375 P-###2
  Level limit switch with PFM input
  KA 175F/00/a6

3-channel:

- Nivotester
  FTL 375 P-###3
  Level limit switch with PFM input
  KA 176F/00/a6

Functional Safety Manual

1-channel:

- Nivotester
  FTL 375 P-###1
  SD 113F/00/en

2-channel:

- Nivotester
  FTL 375 P-###2
  SD 113F/00/en

3-channel:

- Nivotester
  FTL 375 P-###3
  SD 113F/00/en

Certificates

ATEX:

- Nivotester
  FTL 375 P
  XA 147F/00/a3

DIBt:

- Liquiphant M, Liquiphant S
  FTL 50/51, FTL 50 H/51 H, FTL 51 C, FTL 70/71
  ZE 233F/00/de

SIL:

- Nivotester
  SD 113F/00/en

Endress+Hauser GmbH+Co.
Instruments International
P.O. Box 2222
D-79574 Weil am Rhein
Germany

Tel. (07621) 975-02
Tx 773926
Fax (07621) 975 345
e-mail: info@ii.endress.com

Internet:
http://www.endress.com

Endress+Hauser
The Power of Know How

11.01

TI 360F/00/en/10.03
SL/FM + SGML6.0 ProMoDo