SU7000

Ultrasonic flow meter

SUR34HGBFRKG/W/US-100-IPF

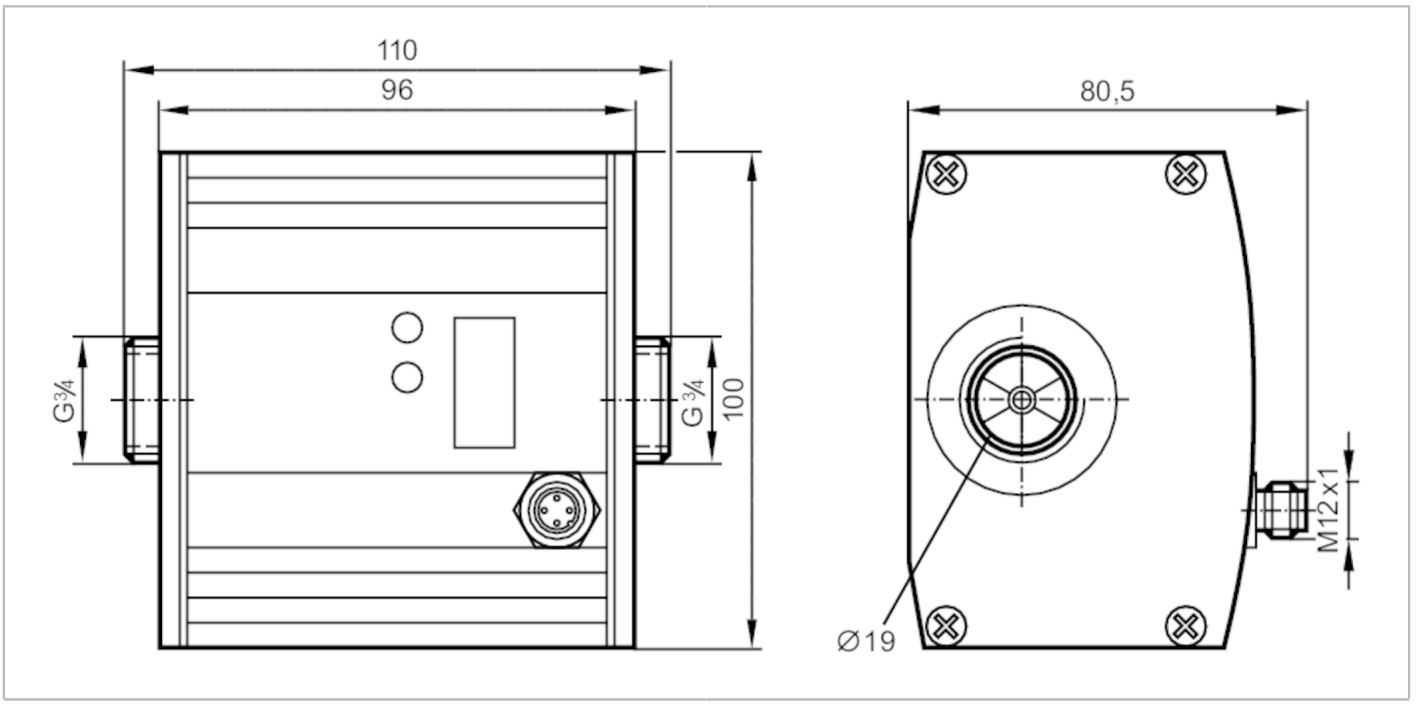

Product characteristics			
Number of inputs and outputs		Number of digital outputs: 2; Number of analogue outputs: 1	
Measuring range		0...50 l/min	0...3 m³/h
Process connection		threaded connection G 3/4 flat seal	
Application			
Special feature		Gold-plated contacts	
Application		totaliser function; for industrial applications	
Installation		connection to pipe by means of an adapter	
Media		water; glycol solutions; coolants; oils	
Note on media		low-viscosity oils with viscosity: 7...40 mm²/s (40 °C)	
		high-viscosity oils with viscosity: 30...68 mm²/s (40 °C)	
Medium temperature	[°C]	-10...80	
Pressure rating		16 bar	1.6 MPa
Electrical data			
Operating voltage	[V]	19...30 DC; (to SELV/PELV)	
Current consumption	[mA]	100	
Min. insulation resistance	[MΩ]	100; (500 V DC)	
Protection class		III	
Reverse polarity protection		yes	
Power-on delay time	[s]	10	
Inputs / outputs			
Number of inputs and outputs		Number of digital outputs: 2; Number of analogue outputs: 1	
Inputs			
Inputs		counter reset	

SU7000

Ultrasonic flow meter

SUR34HGBFRKG/W/US-100-IPF

Outputs		
Total number of outputs		2
Output signal		switching signal; analogue signal; pulse signal; (configurable)
Electrical design		PNP/NPN
Number of digital outputs		2
Output function		normally open / normally closed; (parameterisable)
Max. voltage drop switching output DC	[V]	2
Permanent current rating of switching output DC	[mA]	250; (per output)
Number of analogue outputs		1
Analogue current output	[mA]	4...20; (scalable)
Max. load	[Ω]	500
Analogue voltage output	[V]	0...10; (scalable)
Min. load resistance	[Ω]	2000
Pulse output		flow rate meter
Short-circuit protection		yes
Type of short-circuit protection		pulsed
Overload protection		yes

Measuring/setting range			
Measuring range		0...50 l/min	0...3 m³/h
Display range		0...60 l/min	0...3.6 m³/h
Resolution		0.1 l/min	0.005 m³/h
Set point SP		0.1...50 l/min	0.005...3 m³/h
Reset point rP		0...49.9 l/min	0...2.995 m³/h
Analogue start point ASP		0...40 l/min	0...2.4 m³/h
Analogue end point AEP		10...50 l/min	0.6...3 m³/h
Max. flow rate		60 l/min	3.6 m³/h
In steps of		0.1 l/min	0.005 m³/h
Volumetric flow quantity monitoring			
Pulse value		0.1 l...1 000 000 m³	
Pulse length	[s]	0,05...2	
Temperature monitoring			
Measuring range	[°C]	-10...80	
Resolution	[°C]	0.2	
Set point SP	[°C]	-9.8...80	
Reset point rP	[°C]	-10...79.8	
Analogue start point	[°C]	-10...62	
Analogue end point	[°C]	8...80	
In steps of	[°C]	0.2	

Accuracy / deviations	
Flow monitoring	
Accuracy (in the measuring range)	water: < ± (3 % MW + 0,2 % MEW); glycol (35 %), oil (viscosity 68 mm²/s at 40 °C): < ± (5 % MW + 0,5 % MEW)

SU7000

Ultrasonic flow meter

SUR34HGBFRKG/W/US-100-IPF

Repeatability			0,1 l/min; 6 l/h; 0,006 m³/h
Temperature monitoring			
Accuracy	[K]		± 3 (Q > 1 l/min)
Response times			
Flow monitoring			
Response time	[s]		0.25; (dAP = 0)
Delay time programmable dS, dr	[s]		0...50
Damping process value dAP	[s]		0...1
Temperature monitoring			
Dynamic response T05 / T09	[s]		T09 = 70 (Q > 5 l/min); (water)
Software / programming			
Parameter setting options			Flow monitoring; quantity meter; Preset counter; Temperature monitoring
Operating conditions			
Ambient temperature	[°C]		-10...60
Storage temperature	[°C]		-25...80
Protection			IP 67
Tests / approvals			
EMC		EN 61000-4-2 ESD	4 kV CD / 8 kV AD
		EN 61000-4-3 HF radiated	10 V/m
		EN 61000-4-4 Burst	2 kV
		EN 61000-4-5 Surge	0,5 kV
		EN 61000-4-6 HF conducted	10 V
CPA approval		model number	001US
		accuracy class	3
		maximum allowable error	-
		Q (min)	0,5 m³/h
		Q (t)	-
		Q (max)	3 m³/h
Shock resistance		DIN IEC 68-2-27	20 g (11 ms)
Vibration resistance		DIN IEC 68-2-6	5 g (10...2000 Hz)
MTTF	[years]		175
Pressure Equipment Directive			Sound engineering practice; can be used for group 2 fluids; group 1 fluids on request
Mechanical data			
Weight	[g]		1551.5
Materials			housing: AlMgSi0,5 anodised; Sealing: FKM; PA 6.6; cover film: PA
Materials (wetted parts)			stainless steel (1.4404 / 316L); FKM; PES; Centellen 200
Process connection			threaded connection G 3/4 flat seal
Displays / operating elements			
Display		Display unit	6 x LED, green (l/min, m³/h, l, m³, 10³, °C)
		switching status	2 x LED, yellow
		measured values	alphanumeric display, 4-digit
		programming	alphanumeric display, 4-digit
Accessories			
Items supplied			sealings: 2, Centellen

SU7000

Ultrasonic flow meter

SUR34HGBFRKG/W/US-100-IPF

Accessories (optional)	adapter for pipe: 1 x R1/2, stainless steel, E40178
	adapter for pipe: 1 x R1/2, brass, E40151

Remarks

Remarks	MW = measured value
	MEW = Final value of the measuring range
	sealing: only with supplied Centellen seals
Pack quantity	1 pcs.

Electrical connection

Connector: 1 x M12; coding: A; Moulded body: brass, Optalloy-plated; Contacts: gold-plated



Connection

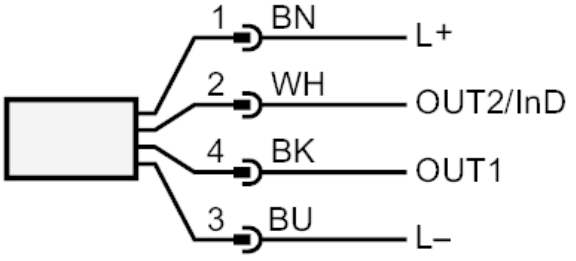

OUT1:	switching output volumetric flow quantity monitoring Pulse output quantity meter signal output Preset counter
OUT2/InD:	switching output volumetric flow quantity monitoring / Temperature monitoring analogue output volumetric flow quantity monitoring / Temperature monitoring input counter reset

SU7000

Ultrasonic flow meter

SUR34HGBFRKG/W/US-100-IPF

Diagrams and graphs

Pressure loss

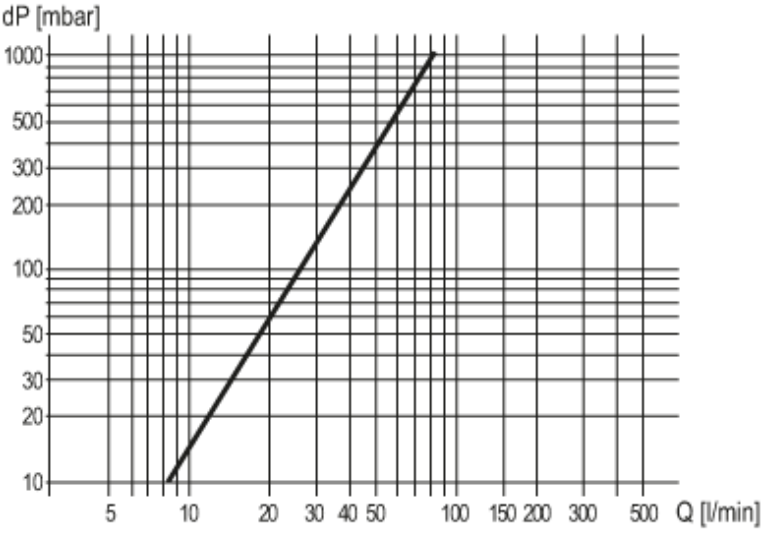

dP Pressure loss

Q volumetric flow quantity