SD6100

Industrial gas counter

SDR12DGXFPKG/US-100

phase-out article

Alternative articles: SD6600
When selecting an alternative article and accessories please note that technical data may differ!

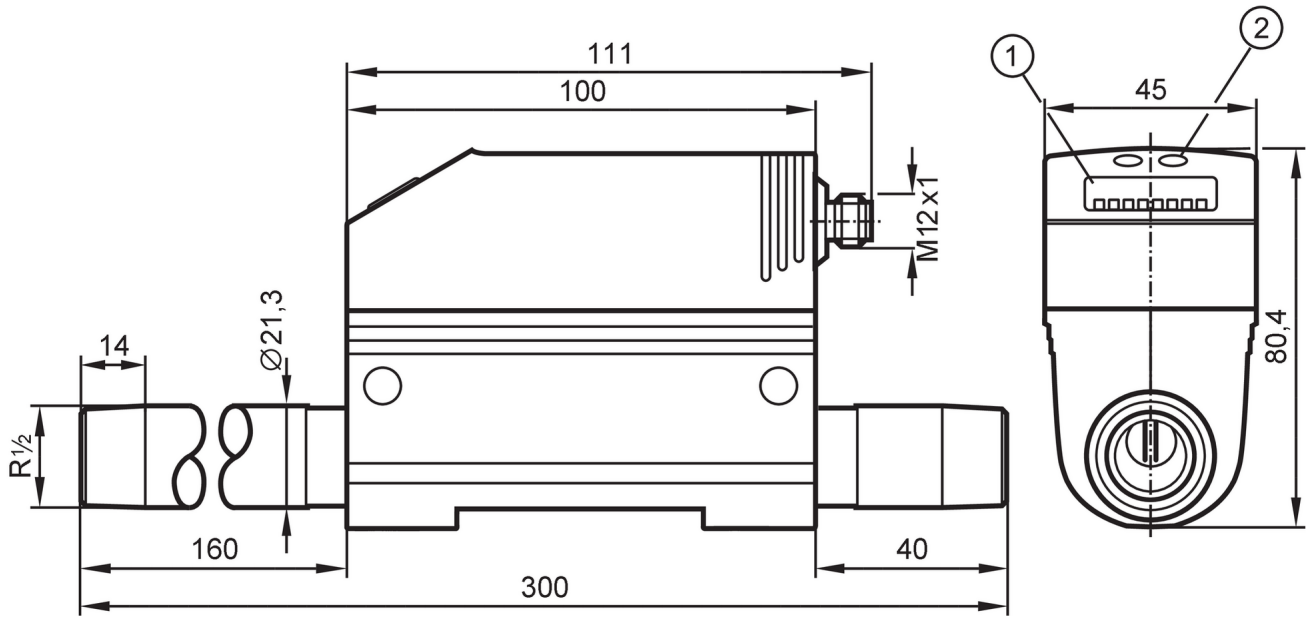

1 alphanumeric display 4-digit
2 programming buttons

Product characteristics			
Number of inputs and outputs		Number of digital outputs: 2; Number of analogue outputs: 1	
Process connection		threaded connection R 1/2 external thread DN15	
Ar			
Measuring range	[m³/h]	0.4...122	
CO2			
Measuring range	[m³/h]	0.2...74.7	
N2			
Measuring range	[m³/h]	0.2...75	
Application			
Application		for industrial applications	
Media		Argon (Ar); carbon dioxide (CO2); nitrogen (N2)	
Medium temperature	[°C]	0...60	
Pressure rating		16 bar	1.6 MPa
Electrical data			
Operating voltage	[V]	18...30 DC; (to SELV/PELV)	
Current consumption	[mA]	< 100	
Protection class		III	
Reverse polarity protection		yes	
Power-on delay time	[s]	1	

SD6100

Industrial gas counter

SDR12DGXFPKG/US-100

Inputs / outputs		
Number of inputs and outputs		Number of digital outputs: 2; Number of analogue outputs: 1
Outputs		
Total number of outputs		2
Output signal		switching signal; analogue signal; pulse signal; IO-Link; (configurable)
Electrical design		PNP
Number of digital outputs		2
Output function		normally open / normally closed; (parameterisable)
Max. voltage drop switching output DC	[V]	2
Permanent current rating of switching output DC	[mA]	250; (per output)
Number of analogue outputs		1
Analogue current output	[mA]	4...20; (scalable)
Max. load	[Ω]	500
Pulse output		consumed quantity meter
Short-circuit protection		yes
Type of short-circuit protection		pulsed
Overload protection		yes
Measuring/setting range		
Low flow cut-off LFC	[m³/h]	< 1.3
Measuring dynamics		1:300
Ar		
Measuring range	[m³/h]	0.4...122
Display range	[m³/h]	0...146.4
Resolution	[m³/h]	0.1
Set point SP	[m³/h]	1.1...122
Reset point rP	[m³/h]	0.6...121.5
Analogue start point ASP	[m³/h]	0...97.6
Analogue end point AEP	[m³/h]	24.4...122
In steps of	[m³/h]	0.1
CO2		
Measuring range	[m³/h]	0.2...74.7
Display range	[m³/h]	0...89.7
Resolution	[m³/h]	0.1
Set point SP	[m³/h]	0.7...74.7
Reset point rP	[m³/h]	0.4...74.4
Analogue start point ASP	[m³/h]	0...59.8
Analogue end point AEP	[m³/h]	14.9...74.7
In steps of	[m³/h]	0.1
Volumetric flow quantity monitoring		
Pulse value		0.001...1 000 000 m³
In steps of		0.001...1000 m³

SD6100

Industrial gas counter

SDR12DGXFPKG/US-100

Pulse length	[s]	0,012...2
N2		
Measuring range	[m³/h]	0.2...75
Display range	[m³/h]	0...90
Resolution	[m³/h]	0.1
Set point SP	[m³/h]	0.7...75
Reset point rP	[m³/h]	0.4...74.7
Analogue start point ASP	[m³/h]	0...60
Analogue end point AEP	[m³/h]	15...75
In steps of	[m³/h]	0.1
Temperature monitoring		
Measuring range	[°C]	0...60
Display range	[°C]	-12...72
Resolution	[°C]	0.2
Set point SP	[°C]	0.4...60
Reset point rP	[°C]	0...59.8
Analogue start point	[°C]	0...48
Analogue end point	[°C]	12...60
In steps of	[°C]	0.2
Accuracy / deviations		
Flow monitoring		
Repeatability	[% of the measured value]	± 1,5
Accuracy (in the measuring range)		± (6 % MW + 0,6 % MEW); (conditions: installation to DIN ISO 2533; installation in pipes: DN15)
Temperature monitoring		
Accuracy	[K]	± 2; (medium flow in the limit area of the flow measurement range)
Response times		
Flow monitoring		
Response time	[s]	0.1; (dAP = 0)
Damping process value dAP in steps	[s]	0 - 0,2 - 0,4 - 0,6 - 0,8 - 1
Software / programming		
Parameter setting options		Flow monitoring; quantity meter; Preset counter; hysteresis / window; normally open / normally closed; current/pulse output; display can be rotated and switched off; Display unit; medium selection
Interfaces		
Communication interface		IO-Link
Transmission type		COM2 (38,4 kBaud)
IO-Link revision		1.1
SDCI standard		IEC 61131-9

SD6100

Industrial gas counter

SDR12DGXFPKG/US-100

Profiles		Smart Sensor - SSP 0	Generic Profiled Sensor
		Function	Device identification
		Function	Process data variable
		Function	Device diagnosis
SIO mode		yes	
Required master port type		A	
Process data analogue		3	
Process data binary		2	
Min. process cycle time	[ms]	4.1	
Supported DeviceIDs		**Type of operation**	**DeviceID**
		default	265
Operating conditions			
Ambient temperature	[°C]	0...60	
Storage temperature	[°C]	-20...85	
Max. relative air humidity	[%]	90	
Protection		IP 65	
Tests / approvals			
EMC		EN 61000-4-2 ESD	4 kV CD / 8 kV AD
		EN 61000-4-3 HF radiated	10 V/m
		EN 61000-4-4 Burst	2 kV
		EN 61000-4-6 HF conducted	10 V
CPA approval		model number	003TG
		accuracy class	-
		maximum allowable error	± 7 % FS
		Q (min)	0,2 m³/h (N2)
			0,2 m³/h (CO2)
			0,4 m³/h (Ar)
		Q (t)	-
		Q (max)	75 m³/h (N2)
			74,7 m³/h (CO2)
			122 m³/h (Ar)
Vibration resistance		DIN IEC 68-2-6	5 g (55...2000 Hz)
MTTF	[years]	227	
Pressure Equipment Directive		Sound engineering practice; can be used for group 2 fluids; group 1 fluids on request	
Mechanical data			
Weight	[g]	963.5	
Dimensions	[mm]	300 x 45 x 80.4	
Materials		PBT-GF20; PC; PC; stainless steel (304/1.4301); FKM	
Materials (wetted parts)		stainless steel (304/1.4301); ceramics glass passivated; PEEK; polyester; FKM; aluminium anodised	
Tightening torque	[Nm]	50	
Process connection		threaded connection R 1/2 external thread DN15	

SD6100

Industrial gas counter

SDR12DGXFPKG/US-100

Displays / operating elements		
Display	Display unit	4 x LED, green (Nl/min, Nm³/h, Nm³, °C)
	function display	1 x LED, yellow
	switching status	2 x LED, yellow
	measured values	alphanumeric display, 4-digit
	programming	alphanumeric display, 4-digit
Display unit	Nl/min; Nm³/h; Nm³; °C	

Remarks	
Remarks	MW = measured value
	MEW = Final value of the measuring range
	Measuring, display and setting ranges refer to the standard volume flow according to DIN ISO 2533.
Pack quantity	1 pcs.

Electrical connection

Connector: 1 x M12; coding: A; Contacts: 4



Connection

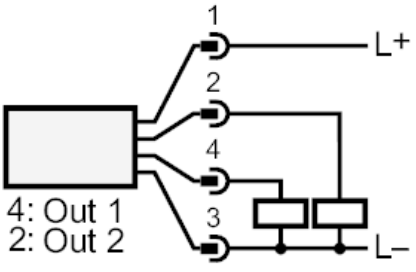

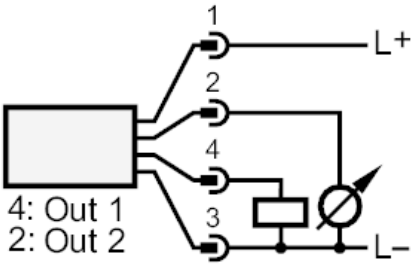

OUT1:	switching output Pulse output quantity meter signal output Preset counter
OUT2:	switching output analogue output