CE

Operating instructions
Optical distance sensor
O1D105

GB

11454899 / 00 11 / 2024

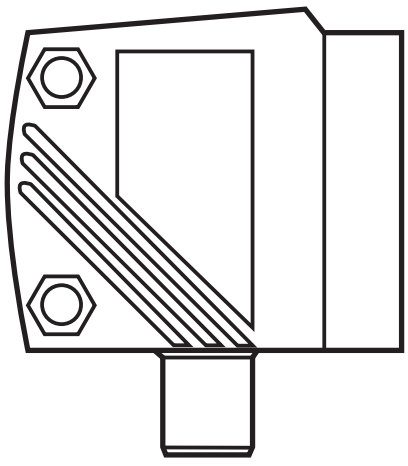

Content

1 Preliminary note 4
1.1 Symbols used 4
1.2 Warning signs used 4

2 Safety instructions 4

3 Functions and features 6
3.1 Applications 6

4 Functions 6
4.1 Output function hysteresis 6
4.2 Output function window 6
4.3 Analogue output function 6
4.4 Switch off the laser 6

5 Installation 7
5.1 Installation conditions 7
5.2 Mounting accessories 7

6 Electrical connection 8
6.1 Operation with IO-Link master 8

7 Operating and display elements 9

8 Menu 10
8.1 Menu structure 10
8.2 Explanation of the menu 11

9 Operating modes 13
9.1 Run mode 13
9.2 Display mode 13
9.3 Object reflectivity 13
9.4 Programming mode 13

10 Parameter setting 14
10.1 Parameter setting in general 14
10.1.1 Setting of the parameter value 14
10.1.2 Change from menu level 1 to menu level 2 15
10.1.3 Electronic lock 15
10.2 Configuration of the basic settings 16
10.2.1 Selection of the display unit 16

10.2.2 Setting of the display 16
10.2.3 Configuration of OUT1 16
10.2.4 Hysteresis function 17
10.2.5 Setting of the switch point for hysteresis function OUT1 18
10.2.6 Window function 18
10.2.7 Setting of the switch points for window function OUT1 19
10.2.8 Configuration of OUT1 20
10.2.9 Setting of the switch point for hysteresis function OUT2 20
10.2.10 Setting of the switch points for window function OUT2 20
10.2.11 Scaling of the measuring range (analogue output) 20
10.3 Teach mode 22
10.3.1 Setting of the sampling rate 22
10.3.2 Setting of the repeatability 22
10.3.3 Table repeatability and accuracy 23
10.4 Extended functions 24
10.4.1 Setting of the time delay for switching outputs 24
10.4.2 Setting of the fault suppression time for switching outputs / analogue output 24
10.4.3 Reset of all parameters to factory setting 24
10.4.4 Display of the software version number 24
11 IO-Link 25
11.1 General information 25
11.2 Device-specific information 25
11.3 Parameter setting tools 25
11.4 Extended functions 25
11.4.1 Teach function 25
11.4.2 Object reflectivity 25
12 Set-up / operation 25
12.1 Fault indication 26
13 Maintenance, repair and disposal 27
14 Factory setting 27

1 Preliminary note

1.1 Symbols used

▶ Instruction

> Reaction, result

[…] Designation of pushbuttons, buttons or indications

→ Cross-reference



Important note
Non-compliance can result in malfunctions or interference.



Information
Supplementary note.

1.2 Warning signs used

⚠ WARNING

Warning of serious personal injury.
Death or serious irreversible injuries may result.

2 Safety instructions

- Please read this document prior to set-up of the unit. Ensure that the product is suitable for your application without any restrictions.
- Improper or non-intended use may lead to malfunctions of the unit or to unwanted effects in your application. That is why installation, electrical connection, set-up, operation and maintenance of the unit must only be carried out by qualified personnel authorised by the machine operator.
- In case of malfunction of the unit please contact the manufacturer. If the unit is tampered with and/or modified, any liability and warranty is excluded.

⚠ WARNING

Visible laser light; laser protection class 2.

Use of controls or adjustments other than those specified herein may result in hazardous radiation exposure. Damage to the retina is possible.

- ▶ Do not stare into the laser beam!
- ▶ Apply the enclosed labels (laser warning) in the immediate vicinity of the unit.
- ▶ Adhere to the caution and warning notes on the product label.
- ▶ Use the enclosed label for the power supply cable.
- ▶ EN/IEC 60825-1 : 2007 and EN/IEC 60825-1 : 2014
  Complies with 21 CFR 1040.10 except for conformance with IEC 60825-1 Ed. 3., as described in Laser Notice No. 56, dated May 8, 2019.

GB

Label for supply cable



Product label

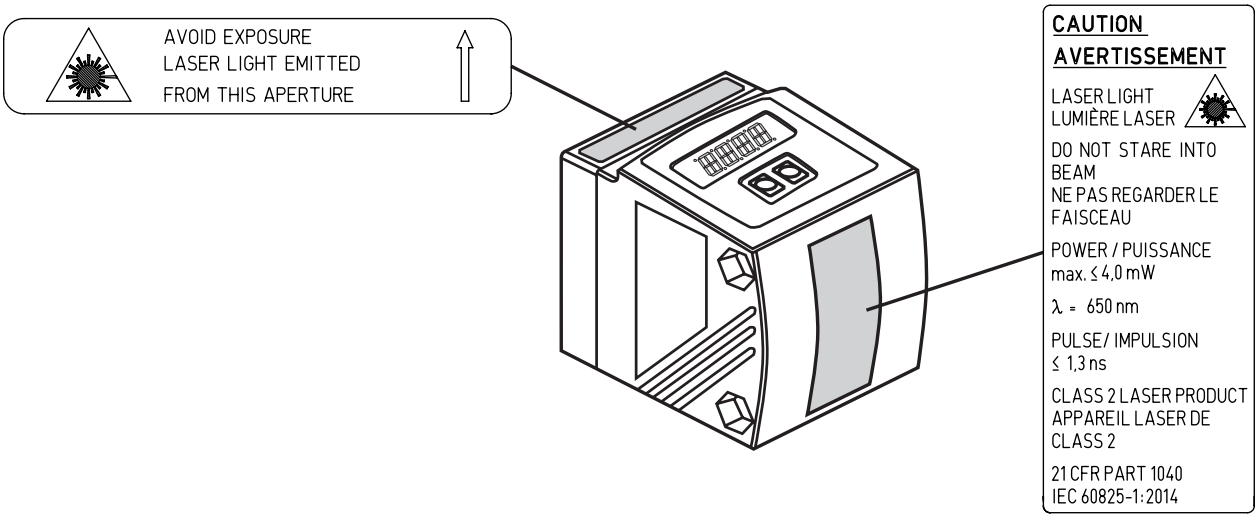

3 Functions and features

The unit is used as an optical distance sensor.

3.1 Applications

- The optical distance sensor measures distances between 0.2 and 10 m.
- It has a background suppression at > 10...100 m.
- The measured value is shown in a 10-segment display.
- According to the set output functions 2 output signals can be generated.

4 Functions

4.1 Output function hysteresis

The hysteresis keeps the switching state of the output stable if the measured value varies about the sensing range. Both outputs (OUT1 and OUT2) can be set as hysteresis function. → 10.2.4 Hysteresis function

4.2 Output function window

The window function enables the monitoring of a defined acceptable range. Both outputs (OUT1 and OUT2) can be set as window function. → 10.2.6 Window function

4.3 Analogue output function

The sensor can also output an analogue signal on output 2 (OUT2) which is proportional to the distance. → 10.2.11 Scaling of the measuring range (analogue output)

4.4 Switch off the laser

For safety and maintenance purposes the laser of the unit can be temporarily switched off via the input on pin 5.

Input signal at pin 5	Laser
Low / not connected	On
High	Off

5 Installation

5.1 Installation conditions

▶ Install the unit so that the object to be detected is within a measuring range of 0.2...10 m.

The unambiguity range of the sensor is fixed to 100 m. Objects within a range > 10…100 m are suppressed.

Reflecting objects in the direct beam path of the sensor - also in the range > 100 m – are to be avoided by the customer. Otherwise the measured values may be ambiguous.

GB

5.2 Mounting accessories

The unit is supplied without mounting accessories.

Examples of mounting accessories	Art. no.
Protective cover O1D	E21133
Mounting set E2D101 + E20938 + E20951	E21079
Mounting set O1D (for rod mounting Ø 12 mm)	E2D101
Mounting rod straight Ø 12 mm / M10	E20938
Mounting set O1D (for rod mounting Ø 14 mm)	E2D111
Mounting rod straight Ø 14 mm / M12	E20939
Fixture for mounting and fine adjustment of O1D laser units (rod or free-standing; depending on the clamp)	E1D100

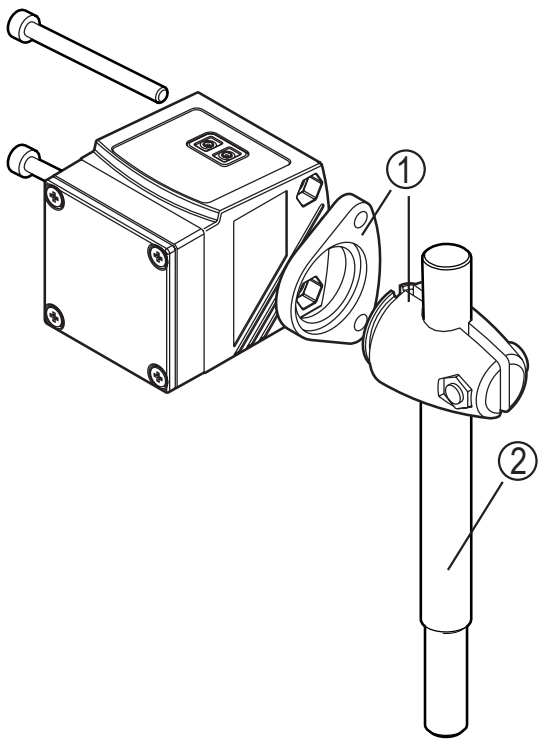

Example mounting:

1: Mounting set for Ø 12 mm rod art. no. E2D101
2: Mounting rod straight Ø 12 mm / M10 art. no. E20938

6 Electrical connection

The unit must be connected by a qualified electrician.

▶ The national and international regulations for the installation of electrical equipment must be adhered to.

▶ Ensure voltage supply according to EN 50178, SELV, PELV.
O1D105: cULus, Supply Class 2

▶ Disconnect power.

▶ Connect the unit as follows:

O1D105 PNP

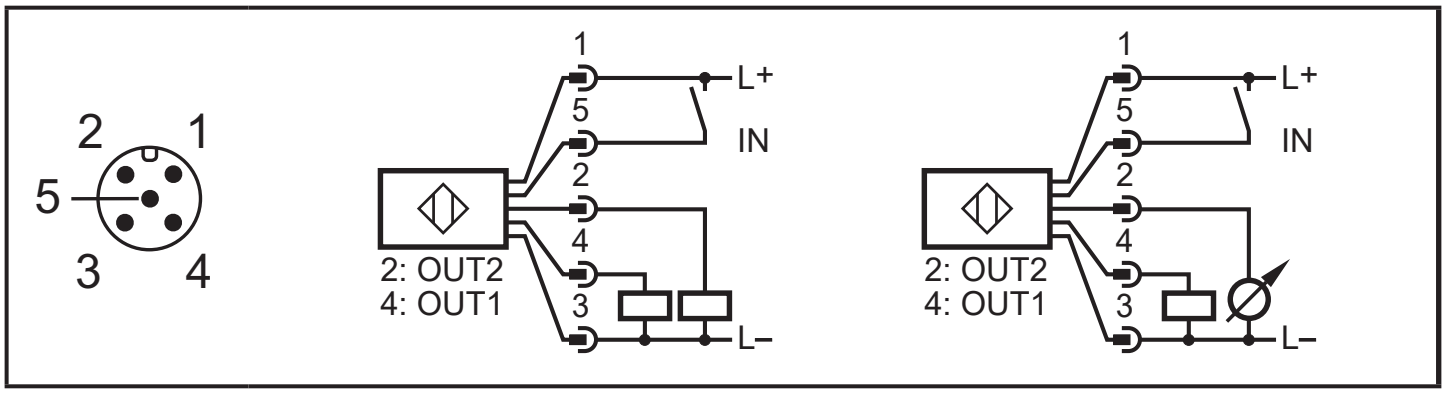

Core colours of ifm sockets:
1 = BN (brown), 2 = WH (white), 3 = BU (blue), 4 = BK (black), 5 = GR (grey).

6.1 Operation with IO-Link master

The unit is compatible with IO-Link master port class A (type A).

For operation with IO-Link master port class B (type B) observe the following:

As a standard, the unit is not compatible with master port class B (type B). Pin 2 (OU2) and pin 5 (IN1) are used for manufacturer-specific functions. That means that the main supply voltage of the unit and the additional voltage supply (master port class B on pins 2/5) are not electrically isolated.

With the following configurations the unit can be used with master port class B:

- Connect unit and IO-Link master via 3 wires: Connect pins 1, 3 and 4 of the unit with the IO-Link master (do not connect pins 2 and 5).
- Connect unit and IO-Link master via 4 wires: Deactivate pin 2 (OU2) via IO-Link (setting OU2 = "off") and connect pins 1, 2, 3 and 4 of the unit with the IO-Link master (do not connect pin 5).

7 Operating and display elements

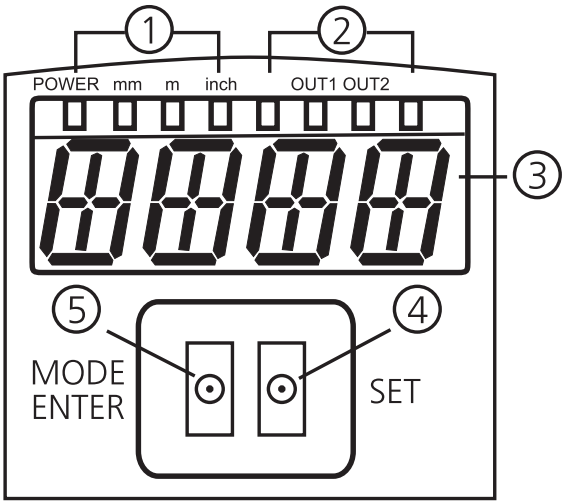

1: 4 x LED green	Lighting LED = power and set display unit (mm, m, inch)
2: 4 x LED yellow (two not connected)	Indication of the switching status; lights, if the corresponding output is switched.
3: 4-digit alphanumeric display	Indication of the measured distance, the parameters and parameter values.
4: Programming button [SET]	Setting of the parameter values (scrolling by holding pressed; incrementally by pressing once).
5: Programming button [MODE/ENTER]	Selection of the parameters and acknowledgement of the parameter values.

8 Menu

8.1 Menu structure

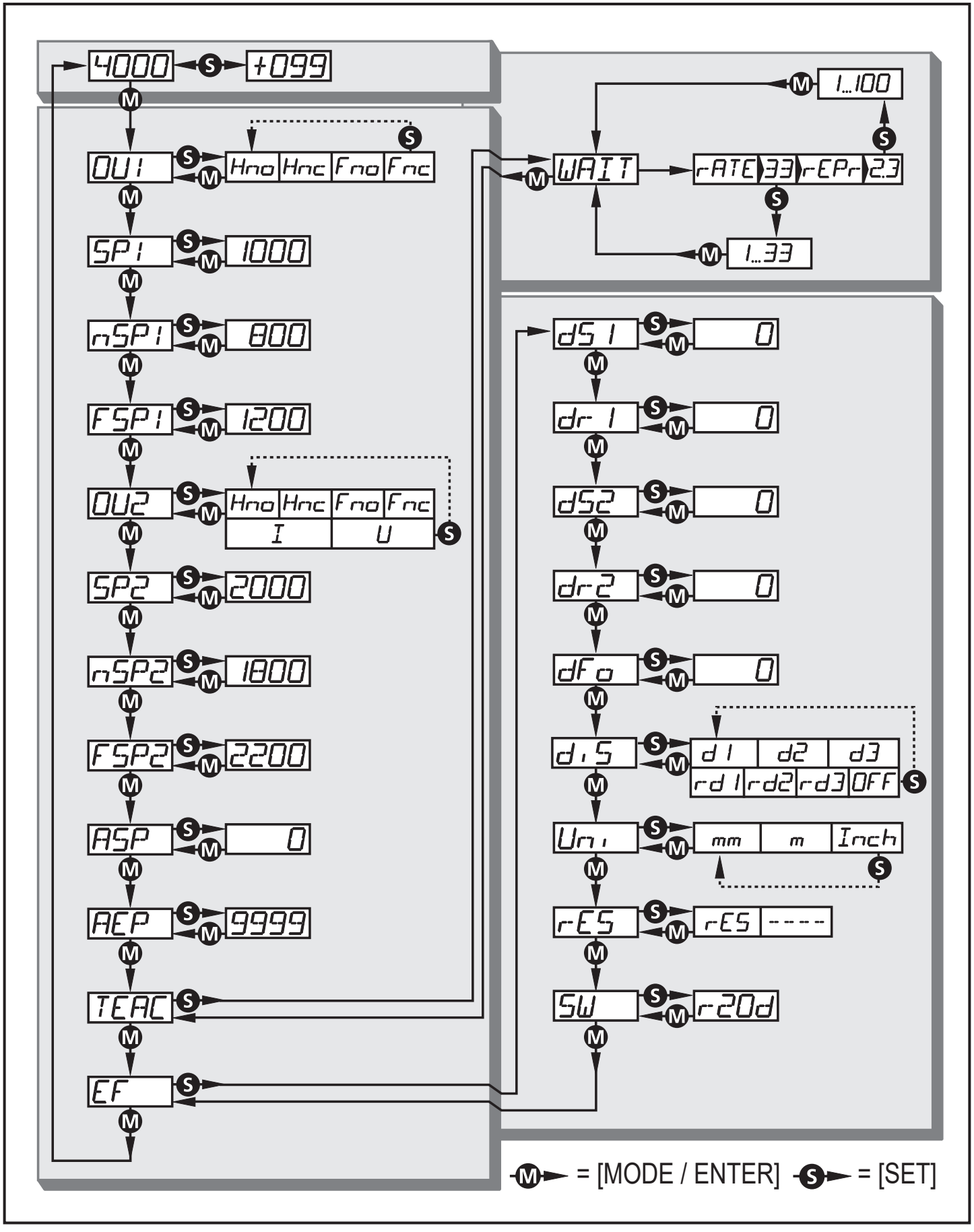

8.2 Explanation of the menu

For the factory settings please refer to the end of these instructions (→ 14 Factory setting).

OU1	**Configuration for output 1** 4 switching functions can be selected: [Hno], [Hnc], [Fno], [Fnc] → 10.2.3 Configuration of OUT1
SP1	**Switch point for hysteresis function OUT1** Limit value at which the output with selected hysteresis function changes its switching state (object nearer/farther than distance set). [SP1] is only active if [OU1] = [Hno] or [Hnc]. → 10.2.5 Setting of the switch point for hysteresis function OUT1
nSP1 FSP1	**Switch points for window function OUT1** Limit values at which the output with selected window function changes its switching state (object present / not present between the distance "near" and the distance "far"). [nSP1] = switch point “near” / [FSP1] = switch point “far”. [nSP1] / [FSP1] are only active if [OU1] = [Fno] or [Fnc]. → 10.2.7 Setting of the switch points for window function OUT1
OU2	**Configuration for output 2** 4 switching functions and 2 analogue signals can be selected: [Hno], [Hnc], [Fno], [Fnc], [I], [U] → 10.2.8 Configuration of OUT1
SP2	**Switch point for hysteresis function OUT2** Limit value at which the output with selected hysteresis function changes its switching state (object nearer/farther than distance set). [SP2] is only active if [OU2] = [Hno] or [Hnc]. → 10.2.9 Setting of the switch point for hysteresis function OUT2
nSP2 FSP2	**Switch points for window function OUT2** Limit values at which the output with selected window function changes its switching state (object present / not present between the distance "near" and the distance "far"). [nSP2] = switch point “near” / [FSP2] = switch point “far”. [nSP2] / [FSP2] are only active if [OU2] = [Fno] or [Fnc]. → 10.2.10 Setting of the switch points for window function OUT2
ASP	**Analogue start point** Measured value at which 4 mA / 0 V are provided. [ASP] is only active if [OU2] = [I] or [U]. → 10.2.11 Scaling of the measuring range (analogue output)

GB

AEP	**Analogue end point** Measured value at which 20 mA / 10 V are provided. [AEP] is only active if [OU2] = [I] or [U]. → 10.2.11 Scaling of the measuring range (analogue output)
TEAC	**Teach mode** Selection "sampling rate" or "repeatability" → 10.3 Teach mode

EF	**Extended functions** Press [SET] to open the submenu "Extended functions" → 10.4 Extended functions
dS 1 dr 1 dS2 dr2	**Delay for the switching outputs** [dSx] = switch-on delay; [drx] = switch-off delay. The output does not immediately change its switching status when the switching condition is met but only after the delay has elapsed. If the switching condition is no longer met after the delay has elapsed, the switching status of the output does not change. [dS2] and [dr2] are not effective if [OU2] = [I] or [U]. → 10.4.1 Setting of the time delay for switching outputs
dFo	**Damping of the measured signal** This function allows to suppress short-time saturation of the measuring element (such saturation can result from direct reflection or strong fluctuations in brightness). During the delay set, the latest valid value measured is displayed, the output signals remain unchanged. → 10.4.2 Setting of the fault suppression time for switching outputs / analogue output
di S	**Display setting** 7 settings can be selected: [d1], [d2], [d3], [rd1], [rd2], [rd3], [OFF] → 10.2.2 Setting of the display
Unı	**Setting of the display unit** Selection of the unit of measurement for [SP1], [SP2], [ASP], [AEP] Selection options: [mm] [m] [inch] → 10.2.1 Selection of the display unit
rES	**Restore factory setting** → 10.4.3 Reset of all parameters to factory setting
SW	**Display of the software version number** → 10.4.4 Display of the software version number

9 Operating modes

9.1 Run mode

The run mode is the normal operating mode.

After power on the unit is in the Run mode. It carries out its monitoring function and generates output signals according to the set parameters.

The display indicates the current distance, the yellow LEDs signal the switching status of the outputs.

9.2 Display mode

Indication of the parameters and the set parameter values.

▶ Press [MODE/ENTER] briefly.

> Unit goes to the Display mode. Internally it remains in the operating mode. The set parameter values can be read.

▶ To scroll through the parameters, press [MODE/ENTER] briefly.

▶ To display the respective parameter value, press [SET] briefly.

> After 15 s the unit returns to the Run mode.

9.3 Object reflectivity

Display of the object reflectivity (formerly: align mode).

▶ Press [SET] in the Run mode.

> The unit displays an orientation value for the object reflectivity (e.g. +100 corresponds to a white object, +020 corresponds to a grey object).

9.4 Programming mode

Setting the parameter values → 10.1 Parameter setting in general.

10 Parameter setting

During parameter setting the unit remains internally in the operating mode. It continues its monitoring function with the existing parameters until the change has been finished.

10.1 Parameter setting in general

10.1.1 Setting of the parameter value

Select the display unit [Uni] before you define the values for the parameters. In case of subsequent changes of the display unit rounding errors during internal conversion to other units may falsify the set values.
→ 10.2.1 Selection of the display unit

1	**Selection of the parameter** ▶ Press [MODE/ENTER] until the requested parameter is displayed.	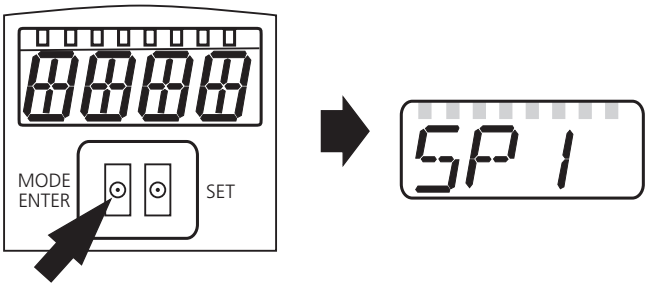
2	**Setting of the parameter value** ▶ Press [SET] and keep it pressed. > The current parameter value flashes for 5 s. ▶ Increase the setting value incrementally by pressing the button once or continuously by pressing it permanently.	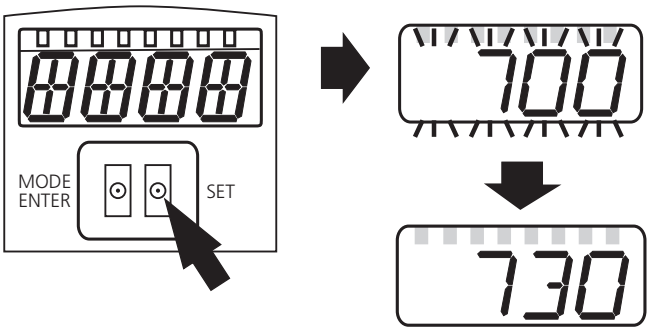
	Decrease the value: let the display move to the maximum setting value. Then the cycle starts again at the minimum setting value.	
3	**Confirmation of the parameter value** ▶ Press [MODE/ENTER] briefly. > The parameter is displayed again; the new parameter value is effective.	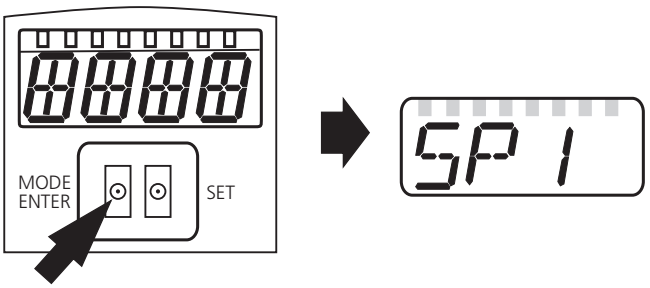
4	**Setting of other parameters** ▶ Start again with step 1.	
5	**Finishing the parameter setting** ▶ Wait for 15 s or press [MODE/ENTER]. > The current measured value is displayed.	

10.1.2 Change from menu level 1 to menu level 2

▶ Press [MODE/ENTER] several times until [EF] is displayed.	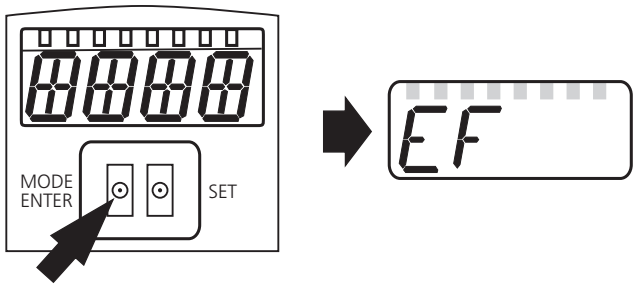
▶ Press [SET] briefly. > The first parameter of the sub-menu is displayed (here: [dr1]).	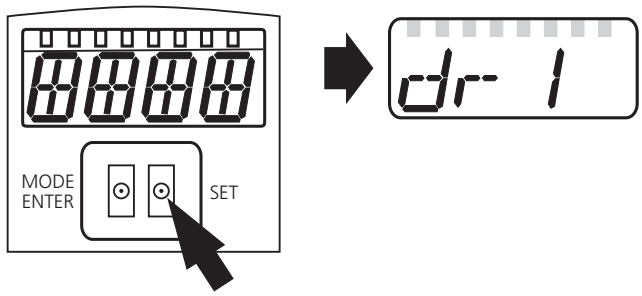

GB

10.1.3 Electronic lock

The unit can be locked electronically to prevent unintentional settings. On delivery the unit is not locked.

Locking ▶ Make sure that the unit is in the normal operating mode. ▶ Keep [MODE/ENTER] + [SET] pressed until [Loc] is displayed. > The unit is locked.	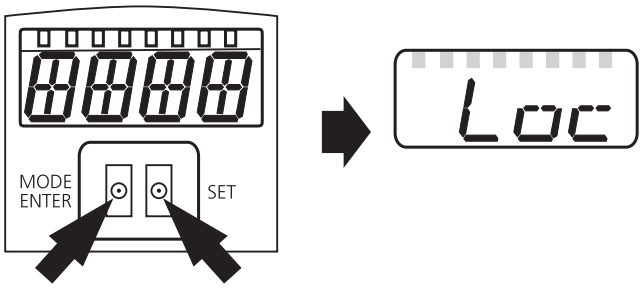
[Loc] is displayed briefly if you try to change parameter values on the locked unit during operation.	
Unlocking ▶ Keep [MODE/ENTER] + [SET] pressed until [uLoc] is displayed. > The unit is unlocked.	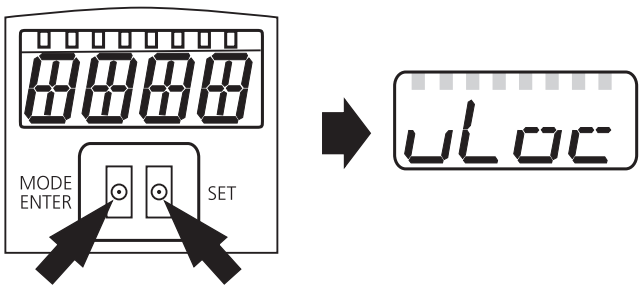

Timeout

If no button is pressed for 15 s during the setting procedure, the unit returns to the Run mode with unchanged values.

10.2 Configuration of the basic settings

10.2.1 Selection of the display unit

Set [Uni] before the values for the parameters [SPx], [nSPx], [FSPx], [ASP], [AEP] are defined. In case of subsequent changes of the display unit rounding errors during internal conversion to other units may falsify the set values. ▶ Change to [EF]. ▶ Select [Uni] and set the unit of measurement. Selection of the unit of measurement: [mm], [m], [inch] ▶ Confirm with [MODE/ENTER]. > The selected unit is indicated by a green LED on the display.	

10.2.2 Setting of the display

▶ Change to [EF]. ▶ Select [diS] and make the settings. 7 settings can be selected: • [d1] = update of the measured value every 50 ms. • [d2] = update of the measured value every 200 ms. • [d3] = update of the measured value every 600 ms. • [rd1], [rd2], [rd3] = display like [d1], [d2], [d3] rotated by 180°. The update of the measured value only refers to the display. It has no effect on the outputs. • [OFF] = The measured value display is deactivated in the Run mode. Press one button to indicate the current measured value for 15 s. ▶ Confirm with [MODE/ENTER]. The LEDs remain active even if the display is deactivated.	

10.2.3 Configuration of OUT1

▶ Select [OU1] and set the switching functions. Switching functions: • [Hno] = hysteresis function / normally open • [Hnc] = hysteresis function / normally closed • [Fno] = window function / normally open • [Fnc] = window function / normally closed ▶ Confirm with [MODE/ENTER].	

10.2.4 Hysteresis function

The hysteresis keeps the switching state of the output stable if the measured value varies about the sensing range. In either case set and reset points are symmetrically arranged around the selected switch point [SPx]. The hysteresis is the distance between set and reset points; it is calculated on the basis of the repeatability with a safety factor of 1.5. The calculation is based on the repeatability for max. 40 klux. → 10.3.3 Table repeatability and accuracy

Example Hno

1. For the output function [Hno] the output switches when the object approaches and when the switch point (A) is reached.
2. When the object is removed again, the output does not switch back before the reset point (B) is exceeded.
   The reset point (B) is greater than the set point (A).

1

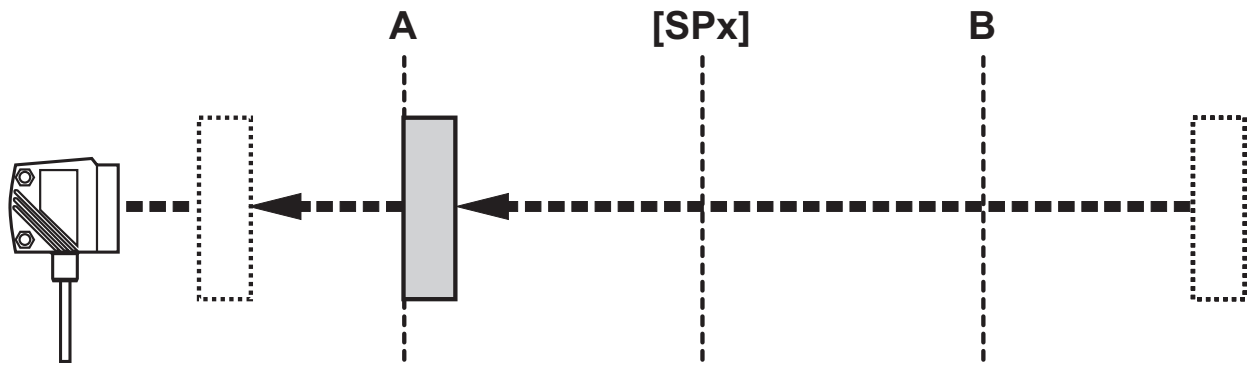

2

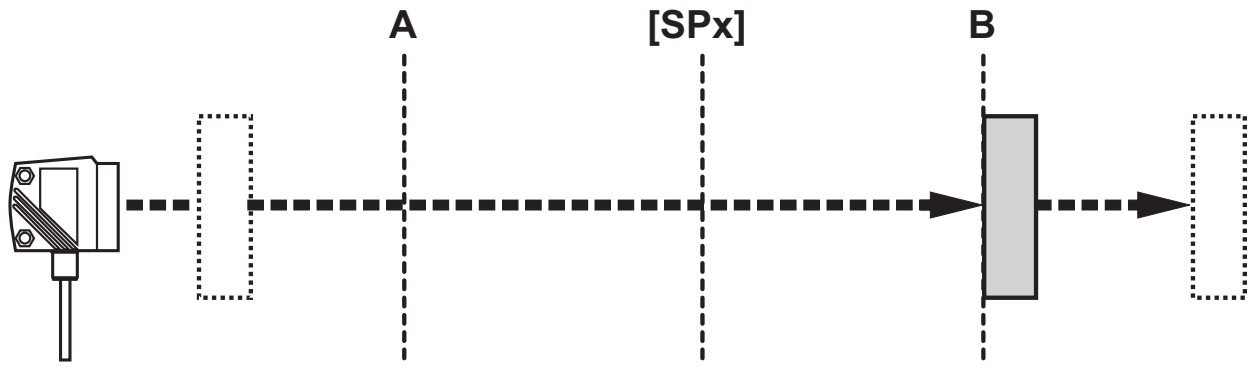

[SPx] = switch point; A = set point; B = reset point

When the output function [Hnc] was selected, set and reset point are reversed. The output is switched off when the object approaches. When the object is removed, the output switches on.

Switching status of the outputs

Output function	Object distance (D)	Output status
[Hno]	D < [SPx]	Closed
	D > [SPx]	Open
[Hnc]	D < [SPx]	Open
	D > [SPx]	Closed

Example of output function [Hno]
Sampling rate 15 Hz, distance to the object 1200 mm, grey value (18 % remission):
Hysteresis = ± 8 mm (repeatability → 10.3.3 table) x factor 1.5 = 12 mm
- Reset point 1200 mm + (12 mm) = 1212 mm
- Set point 1200 mm - (12 mm) = 1188 mm

10.2.5 Setting of the switch point for hysteresis function OUT1

- ▶ Select the output function [Hno] or [Hnc] at [OU1].
- ▶ Confirm with [MODE/ENTER].
- ▶ Select [SP1] and set the switch point.
- ▶ Confirm with [MODE/ENTER].



10.2.6 Window function

It is possible to define a window for the object recognition for each of the two outputs (OUT1 / OUT2).

Switches off when the object is detected

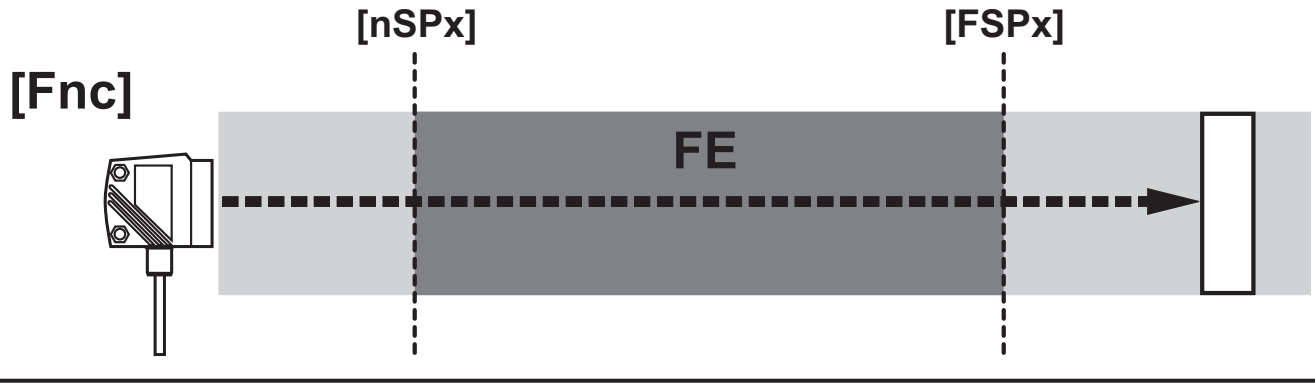

[nSPx] = switch point "near"; [FSPx] = switch point "far"; FE = window

If the measured value is between the switch point "near" [nSPx] and the switch point "far" [FSPx], the output is open (when [OUx] = [Fnc]).

Switches when the object is detected

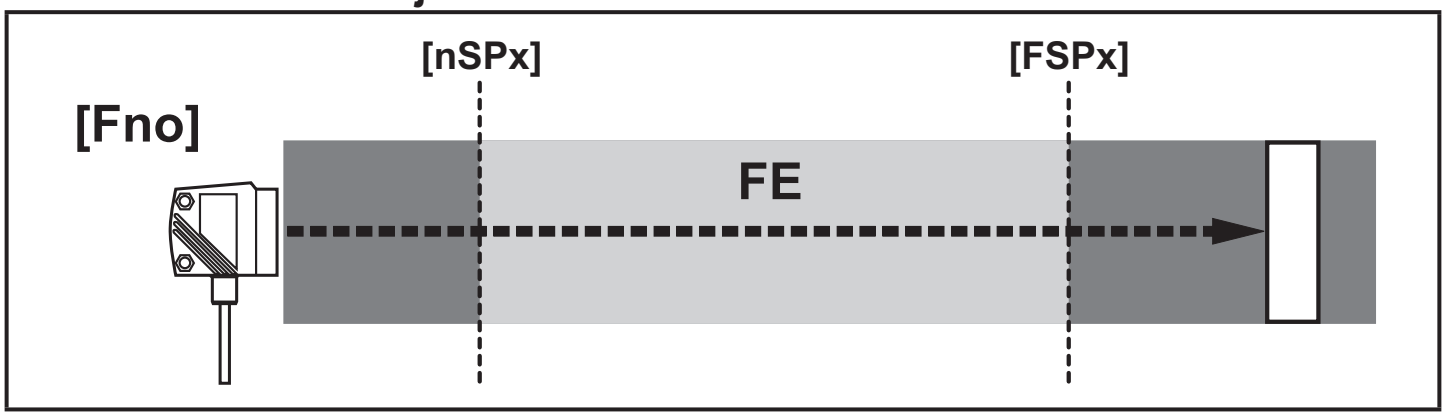

[nSPx] = switch point "near"; [FSPx] = switch point "far"; FE = window

If the measured value is between the switch point "near" [nSPx] and the switch point "far" [FSPx], the output is closed (when [OUx] = [Fno]).

Switching status of the outputs

Output function	Object distance (D)	Output status
[Fno]	D < [nSPx] D > [FSPx]	Open
	[nSPx] < D < [FSPx]	Closed
[Fnc]	D < [nSPx] D > [FSPx]	Closed
	[nSPx] < D < [FSPx]	Open
Both window limit values ([nSPx] and [FSPx]) work with a switching hysteresis → 10.2.4 Hysteresis function / example of the output function [Hno].		

10.2.7 Setting of the switch points for window function OUT1

- ▶ Select the output function [Fno] or [Fnc] at [OU1].
- ▶ Confirm with [MODE/ENTER].
- ▶ Select [nSP1] and set the switch point "near".
- ▶ Confirm with [MODE/ENTER].
- ▶ Select [FSP1] and set the switch point "far".
- ▶ Confirm with [MODE/ENTER].



10.2.8 Configuration of OUT1

- ▶ Select [OU2].
- ▶ Set the switching functions or analogue signals:
  - [Hno] = hysteresis function / normally open
  - [Hnc] = hysteresis function / normally closed
  - [Fno] = window function / normally open
  - [Fnc] = window function / normally closed
  - [I] = current output analogue 4...20 mA
  - [U] = voltage output analogue 0...10 V
- ▶ Confirm with [MODE/ENTER].



10.2.9 Setting of the switch point for hysteresis function OUT2

- ▶ Select [Hno] or [Hnc] at [OU2].
- ▶ Confirm with [MODE/ENTER].
- ▶ Select [SP2] and set the switch point.
- ▶ Confirm with [MODE/ENTER].

→ 10.2.4 Hysteresis function



10.2.10 Setting of the switch points for window function OUT2

- ▶ Select [Fno] or [Fnc] at [OU2].
- ▶ Confirm with [MODE/ENTER].
- ▶ Select [nSP2] and set the switch point "near".
- ▶ Confirm with [MODE/ENTER].
- ▶ Select [FSP2] and set the switch point "far".
- ▶ Confirm with [MODE/ENTER].

→ 10.2.6 Window function



10.2.11 Scaling of the measuring range (analogue output)

- ▶ Select [I] or [U] at [OU2].
- ▶ Confirm with [MODE/ENTER].
- ▶ Select [ASP] and set "Analogue start point".
  With [ASP] you define at which measured value the output signal is 4 mA / 0 V.
- ▶ Confirm with [MODE/ENTER].
- ▶ Select [AEP] and set the "Analogue end point".
  With [AEP] you define at which measured value the output signal is 20 mA / 10 V. It can also be selected so that it is before [ASP]. This implements a falling edge.
- ▶ Confirm with [MODE/ENTER].

Minimum distance between [ASP] and [AEP]:100 mm
When the minimum distance is not reached, the error message "SIZE" is displayed.



Current output 4 ... 20 mA

Factory setting	Measuring range scaled

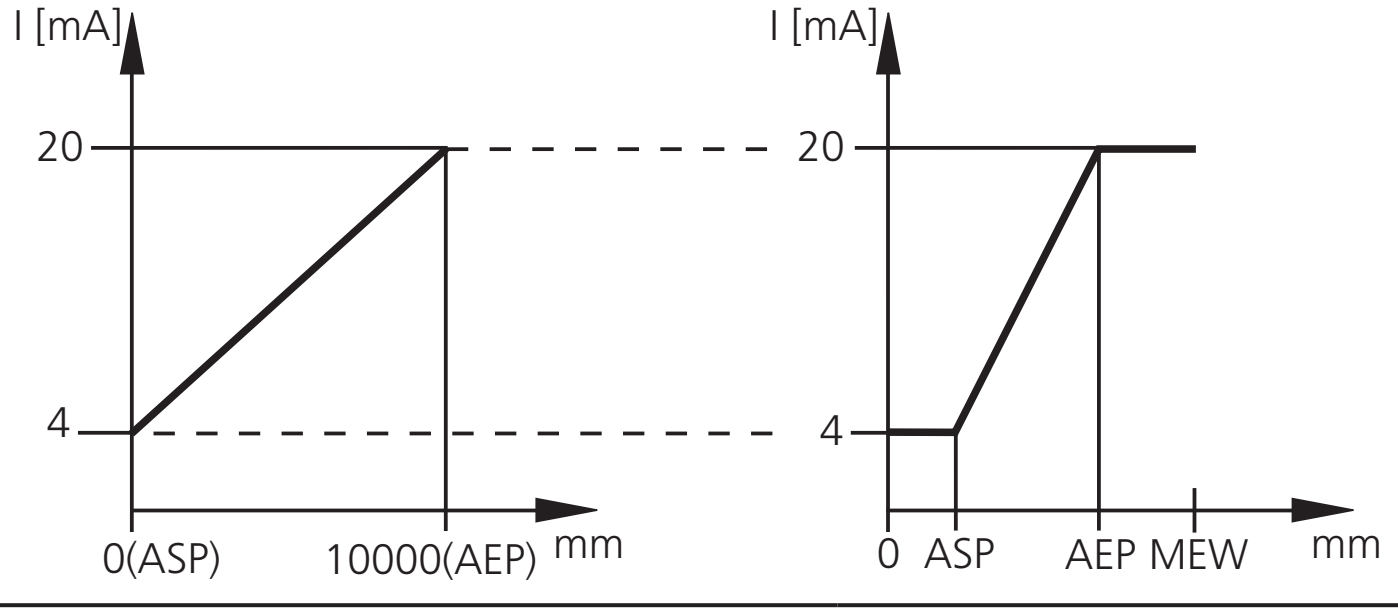

MEW = final value of the measuring range

In the set measuring range the output signal is between 4 and 20 mA.

Faults are also displayed:
Too much light or object too near: 3.5 mA for a rising edge ([ASP] < [AEP]), 20.5 mA for a falling edge ([ASP] > [AEP]).
Object too far or no object present:
20.5 mA for a rising edge; 3.5 mA for a falling edge.

Voltage output 0 ... 10 V

Factory setting	Measuring range scaled

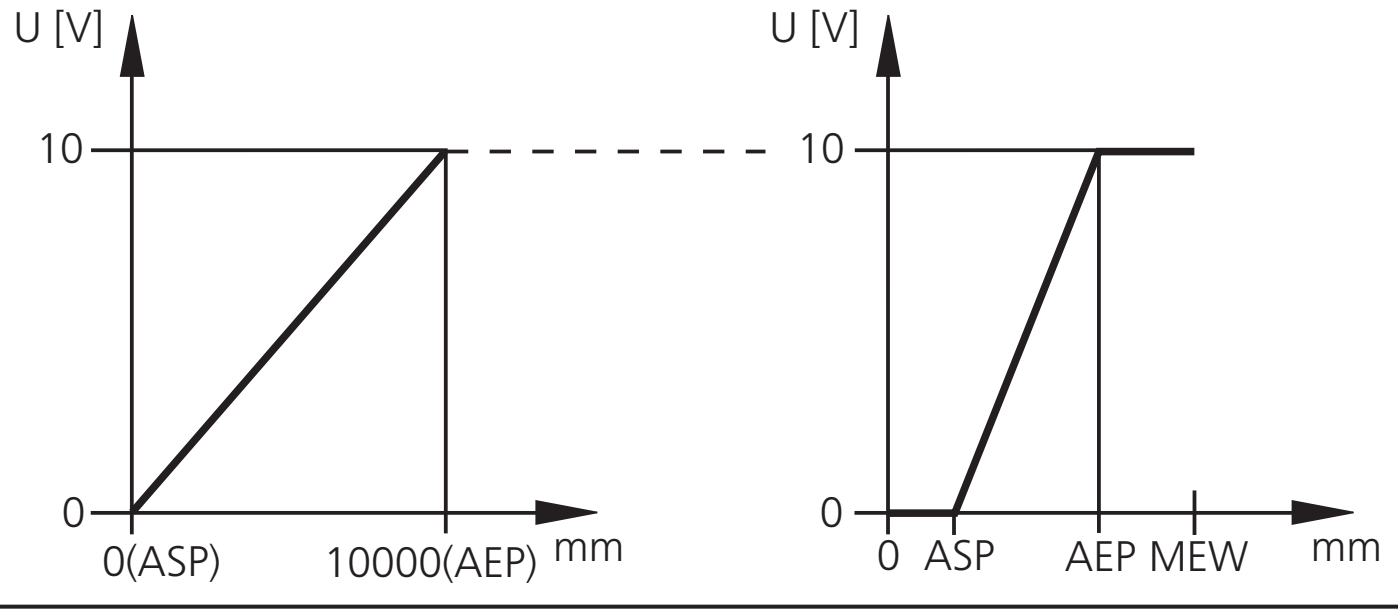

MEW = final value of the measuring range

In the set measuring range the output signal is between 0 and 10V.

10.3 Teach mode

10.3.1 Setting of the sampling rate

The sampling rate indicates the time after which a new result of measurement is provided and the outputs are updated.
The switching frequency is typ. approx. 1/3 of the sampling rate.

- ▶ Select [TEAC], then press [SET] and keep pressed until [WAIT] is displayed.
- > [rATE] and [rEPr] are displayed alternately.
- ▶ When [rATE] is displayed: Press [SET] until the preset measured sampling rate value flashes.
- ▶ Enter a value incrementally by pressing [SET] once.
- ▶ Confirm with [MODE/ENTER].
- > [WAIT] is displayed while the repeatability [rEPr] is calculated.
- > The sampling rate [rATE] and the repeatability [rEPr] are displayed alternately.



10.3.2 Setting of the repeatability

- ▶ Select [TEAC], then press [SET] and keep pressed until [WAIT] is displayed.
- > [rATE] and [rEPr] are displayed alternately.
- ▶ When [rEPr] is displayed: Press [SET] until the preset repeatability value flashes.
- ▶ Enter value incrementally by pressing [SET] once.
- ▶ Confirm with [MODE/ENTER].
- > [WAIT] is displayed while the sampling rate [rATE] is calculated.
- > The sampling rate [rATE] and the repeatability [rEPr] are displayed alternately.



10.3.3 Table repeatability and accuracy

Values for sampling rate 15 Hz, extraneous light of max. 40 klx*

Distance in [mm]	Repeatability		Accuracy	
	white 90 % remission	grey 18 % remission	white 90 % remission	grey 18 % remission
200...1000	± 4.5 mm	± 6.0 mm	± 15.0 mm	± 16.0 mm
1000...2000	± 5.0 mm	± 8.0 mm	± 15.0 mm	± 18.0 mm
2000...4000	± 16.0 mm	± 19.0 mm	± 25.0 mm	± 30.0 mm
4000...6000	± 24.0 mm	± 33.0 mm	± 35.0 mm	± 45.0 mm
6000...10000	± 50.0 mm	—	± 65.0 mm	—

GB

Values for sampling rate 15 Hz, extraneous light of 40...100 klx*

Distance in [mm]	Repeatability		Accuracy	
	white 90 % remission	grey 18 % remission	white 90 % remission	grey 18 % remission
200...2000	± 14.0 mm	± 14.0 mm	± 24.0 mm	± 24.0 mm
2000...4000	± 25.0 mm	± 30.0 mm	± 35.0 mm	± 40.0 mm
4000...6000	± 31.0 mm	± 45.0 mm	± 41.0 mm	± 55.0 mm
6000...10000	± 60.0 mm	—	± 70.0 mm	—

*Range referred to black (6 % remission) ≤ 4000 mm.
The values apply at:
- constant ambient conditions (23°C / 960 hPa)
- only after unit powered up for 10 minutes

10.4 Extended functions

10.4.1 Setting of the time delay for switching outputs

▶ Select [EF]. ▶ Press [SET] to change to the menu [EF]. ▶ Select parameters with [MODE/ENTER]: [dSx] = switch-on delay; [drx] = switch-off delay ▶ Set the parameter value with [SET]: Setting range [s]: 0 / 0.1 ... 5 s in steps of 0.1s (0 = delay time is not active) ▶ Confirm with [MODE/ENTER].	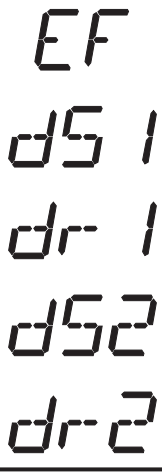

10.4.2 Setting of the fault suppression time for switching outputs / analogue output

▶ Select [EF]. ▶ Press [SET] to change to the menu [EF]. ▶ Select [dFo] (formely: [dAP]). ▶ Set the parameter value with [SET]: Setting range [s]: 0...0.1...0.2...0.5...1...2...5. ▶ Confirm with [MODE/ENTER].	

With [dFo], the error types "too much light" and "not enough light" are suppressed (→ 12.1 Fault indication).

10.4.3 Reset of all parameters to factory setting

▶ Select [EF]. ▶ Press [SET] to change to the menu [EF]. ▶ Select [rES], then press [SET] and keep it pressed until [----] is displayed. ▶ Confirm with [MODE/ENTER]. > The unit changes to the Run mode.	

10.4.4 Display of the software version number

▶ Select [EF]. ▶ Press [SET] to change to the menu [EF]. ▶ Select [SW], then press [SET]. > The software version number is displayed. ▶ Press [MODE/ENTER] to return to the menu [EF].	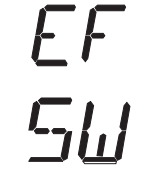

11 IO-Link

11.1 General information

This unit has an IO-Link communication interface which requires an IO-Link-capable module (IO-Link master) for operation.
The IO-Link interface enables direct access to the sensor values and parameters and provides the possibility to set the parameters of the unit during operation.
In addition communication is possible via a point-to-point connection with a USB adapter cable.

You will find more detailed information about IO-Link at www.ifm.com.

11.2 Device-specific information

You will find the IODDs necessary for the configuration of the IO-Link device and detailed information about sensor values, diagnostic information and parameters in the overview table at www.ifm.com.

11.3 Parameter setting tools

You will find all necessary information about the required IO-Link hardware and software at www.ifm.com.

11.4 Extended functions

With IO-Link extended functions and measured data are available.

11.4.1 Teach function

The following teach functions are available:

- Teach on background
- Two-point teaching

The teach functions are described in detail in the IODD.

11.4.2 Object reflectivity

The object reflectivity is provided via the display and as process data value (PDV).

The object reflectivity can, for example, be used to detect sensor soiling.

12 Set-up / operation

▶ After mounting, wiring and programming check whether the unit operates correctly.

> If the unit has been correctly set up, the distance to the object is indicated.

Lifetime of a laser diode: 50000 hours

12.1 Fault indication

Display	Possible cause	Switching output				Current output / voltage output		IO-Link process value distance [3]	IO-Link process value object reflectivity [3]
		[Hno]	[Hnc]	[Fno]	[Fnc]	[ASP] < [AEP]	[ASP] > [AEP]		
[++]	too much light, e.g. reflective surface	ON	OFF	OFF	ON	3,5 mA / 0 V	20,5 mA / 10 V	NoData	OL
[- -]	too little light, no object	OFF	ON	OFF	ON	20,5 mA / 10 V	3,5 mA / 0 V	NoData	UL
[nEAr]	object to be measured outside the measuring range < 0.2 m	ON	OFF	OFF	ON	3,5 mA / 0 V	20,5 mA / 10 V	UL	NoData
[FAr]	object to be measured outside the measuring range > 3.5 m	OFF	ON	OFF	ON	20,5 mA / 10 V	3,5 mA / 0 V	OL	NoData
[Errp]	plausibility (e.g. object too fast)	X[1]	X[1]	X[1]	X[1]	X[1]	X[1]	X[1]	X[1]
[LoFF]	laser switched off	OFF	ON	OFF	ON	20,5 mA / 10 V	3,5 mA / 0 V	NoData	NoData
[SC1]	short circuit in switching output 1					[2]	[2]	n.a.	n.a.
[SC2]	short circuit in switching output 2					[2]	[2]	X[1]	X[1]
[SC]	short circuit in all switching outputs							n.a.	n.a.

[1] unchanged
[2] [SC1] or [SC] only active, if output 2 is configured as switching output.
[3] See IODD of the device

13 Maintenance, repair and disposal

Faulty sensors must only be repaired by the manufacturer.

- ▶ Keep the front lens of the sensor free from soiling.
- ▶ After use dispose of the unit in an environmentally friendly way in accordance with the applicable national regulations.

14 Factory setting

Parameter	Setting range	Factory setting	Own setting
Uni	mm, m, inch	mm	
OU1	Hno, Hnc, Fno, Fnc	Hno	
SP1	200...9999	1000	
nSP1	200...9999	800	
FSP1	200...9999	1200	
OU2	Hno, Hnc, Fno, Fnc, I, U	I	
SP2	200...9999	2000	
nSP2	200...9999	1800	
FSP2	200...9999	2200	
ASP	0...9999	0	
AEP	0...9999	9999	
rATE	1...50	15 Hz	
dS1	0...0.1...5	0 s	
dr1	0...0.1...5	0 s	
dS2	0...0.1...5	0 s	
dr2	0...0.1...5	0 s	
dFo	0...0.1...0.2...0.5...1...2...5	0 s	
diS	d1...3; rd1...3; OFF	d3	