GB

Operating instructions
Photoelectric distance sensor
O1D110

11418505 / 00 11 / 2024

Contents

1 Preliminary note . . . 3
1.1 Symbols used . . . 3
1.2 Warnings . . . 3

2 Safety instructions . . . 4

3 Intended use . . . 6
3.1 Applications . . . 6

4 Functions . . . 7
4.1 Output function hysteresis . . . 7
4.2 Output function window . . . 7
4.3 Analogue function mode . . . 7
4.4 Switch off the laser . . . 7
4.5 IO-Link . . . 7

5 Installation . . . 8
5.1 Installation conditions . . . 8
5.2 Mounting accessories . . . 8

6 Electrical connection . . . 9
6.1 Operation with IO-Link master . . . 9

7 Operating and display elements . . . 10

8 Menu . . . 11
8.1 Menu structure . . . 11
8.2 Explanation of the menu . . . 11

9 Operating modes . . . 13
9.1 Run mode . . . 13
9.2 Display mode . . . 13
9.3 Object reflectivity . . . 13
9.4 Programming mode . . . 13

10 Parameter setting . . . 14
10.1 General parameter setting . . . 14
10.1.1 Setting a parameter value . . . 14
10.1.2 Change from menu level 1 to menu level 2 . . . 14
10.1.3 Electronic lock . . . 14
10.2 Configuration of the basic settings . . . 15
10.2.1 Selection of the display unit . . . 15
10.2.2 Set the display . . . 15
10.2.3 Configure OUT1 . . . 15
10.2.4 Hysteresis function . . . 15
10.2.5 Setting of the switch point for hysteresis function OUT1 . . . 16
10.2.6 Window function . . . 16
10.2.7 Setting of the switch points for window function OUT1 . . . 17
10.2.8 Configure OUT2 . . . 17
10.2.9 Setting of the switch point for hysteresis function OUT2 . . . 18
10.2.10 Setting of the switch points for window function OUT2 . . . 18
10.2.11 Scaling of the measuring range (analogue output) . . . 18
10.3 Teach mode . . . 19
10.3.1 Setting of the sampling rate . . . 19
10.3.2 Setting of the repeatability . . . 20
10.4 Extended functions . . . 20
10.4.1 Set the delay time for switching outputs . . . 20
10.4.2 Setting of the fault suppression time for switching output / analogue output . . . 20
10.4.3 Reset all parameters to factory setting . . . 20
10.4.4 Display of the software version number . . . 21

11 Operation . . . 22
11.1 Error indications . . . 22

12 Maintenance, repair and disposal . . . 23

1 Preliminary note

You will find instructions, technical data, approvals and further information using the QR code on the unit / packaging or at documentation.ifm.com.

1.1 Symbols used

✓	Requirement
▶	Instructions
▷	Reaction, result
[...]	Designation of keys, buttons or indications
→	Cross-reference
	Important note Non-compliance may result in malfunction or interference.
	Information Supplementary note

1.2 Warnings

Warnings indicate the possibility of personal injury and damage to property. This enables safe product handling. Warnings are graded as follows:

WARNING

Warning of serious personal injury

▷ If the warning is not observed, fatal and serious injuries are possible.

CAUTION

Warning of minor to moderate personal injury

▷ If the warning is not observed, minor to moderate injuries are possible.

ATTENTION

Warning of damage to property

▷ If the warning is not observed, damage to property is possible.

2 Safety instructions

- The unit described is a subcomponent for integration into a system.
  - The system architect is responsible for the safety of the system.
  - The system architect undertakes to perform a risk assessment and to create documentation in accordance with legal and normative requirements to be provided to the operator and user of the system. This documentation must contain all necessary information and safety instructions for the operator, the user and, if applicable, for any service personnel authorised by the architect of the system.
- Read this document before setting up the product and keep it during the entire service life.
- The product must be suitable for the corresponding applications and environmental conditions without any restrictions.
- Only use the product for its intended purpose (→ → Intended use).
- If the operating instructions or the technical data are not adhered to, personal injury and/or damage to property may occur.
- The manufacturer assumes no liability or warranty for any consequences caused by tampering with the product or incorrect use by the operator.
- Installation, electrical connection, set-up, operation and maintenance of the product must be carried out by qualified personnel authorised by the machine operator.
- Protect units and cables against damage.

WARNING

Visible laser light; laser protection class 2.

▷ Use of controls or adjustments other than those specified herein may result in hazardous radiation exposure. Damage to the retina is possible.

▶ Do not stare into the laser beam!

▶ Apply the enclosed labels (laser warning) in the immediate vicinity of the unit.

▶ Adhere to the caution and warning notes on the product label.

▶ Use the enclosed label for the power supply cable.

▶ EN/IEC 60825-1 : 2007 and EN/IEC 60825-1 : 2014
Complies with 21 CFR 1040.10 except for conformance with IEC 60825-1 Ed. 3., as described in Laser Notice No. 56, dated May 8, 2019.

Label for supply cable

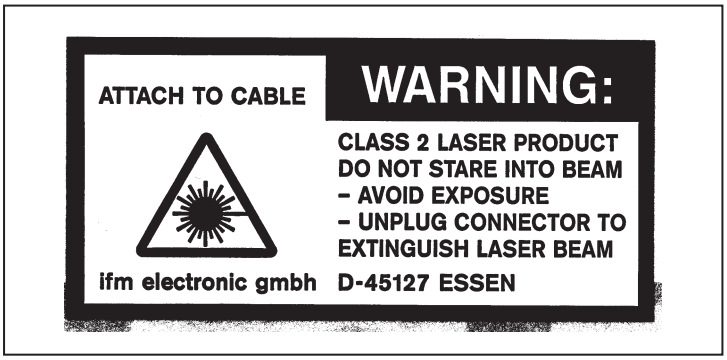

Product label

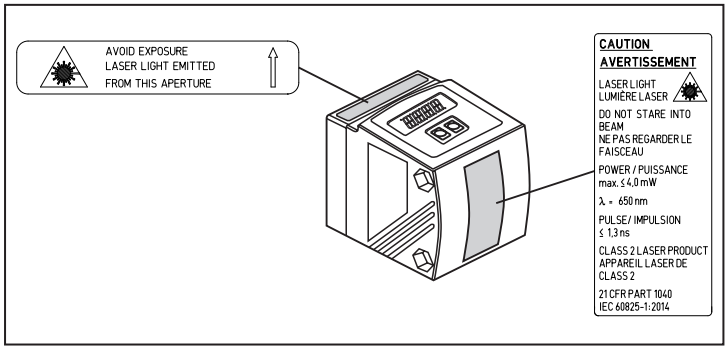

3 Intended use

The unit is used as a photoelectric distance sensor.

3.1 Applications

The photoelectric distance sensor measures distances between 0.2 to 10 m.

- It has a background suppression at >10 to 100 m.
- The measured value is shown in a 10-segment display.
- 2 output signals (according to the set output function).

4 Functions

4.1 Output function hysteresis

The hysteresis keeps the switching state of the output stable if the measured value varies about the sensing range. Both outputs [OUT1] and [OUT2] can be set as hysteresis function. Hysteresis function

4.2 Output function window

The window function enables the monitoring of a defined acceptable range. Both outputs [OUT1] and [OUT2] can be set as window function. Window function

4.3 Analogue function mode

An analogue signal that is proportional to the distance can be output at [OUT2]. Scaling of the measuring range (analogue output)

4.4 Switch off the laser

For safety and maintenance purposes the laser of the unit can be temporarily switched off via the input on pin 5.

Input signal at pin 5	Laser
Low / not used	on
High	Off

4.5 IO-Link

IO-Link is an internationally standardised IO technology (IEC 61131-9) for communicating with sensors and actuators.

General information about IO-Link can be found at io-link.ifm.

IO Device Description (IODD) with all parameters and process data of the unit can be found at documentation.ifm.com.

In the factory setting the unit is in SIO mode (standard input-output). When connected to an IO-Link master, the unit automatically switches to IO-Link mode.

IO-Link offers the following advantages:

- Noise-immune transmission of all process values.
- Parameter setting during operation or point-to-point at the desk.
- Detection of connected units.
- Freely definable parameters to identify the units in the plant.
- Additional parameter and diagnostic functions (events) compared to the SIO mode.
- Data storage: Automatic transfer of parameters when a unit is replaced.
- Logging of parameter sets, process values and events.

5 Installation

5.1 Installation conditions

▶ Install the unit so that the object to be detected is within a measuring range of 0.2 to 10 m.

The unambiguity range of the sensor is fixed to 100 m. Objects within a range >10 to 100 m are suppressed.

Reflecting objects in the direct beam path of the sensor - also in the range > 100 m – are to be avoided by the customer. Otherwise the measured values can be ambiguous.

5.2 Mounting accessories

The unit is supplied without mounting accessories.

Examples of mounting accessories	Art. no.
Protective cover O1D	E21133
Mounting set E2D101 + E20938 + E20951	E21079
Mounting set O1D (for rod mounting Ø 12 mm)	E2D101
Mounting rod straight Ø 12 mm / M10	E20938
Mounting set O1D (for rod mounting Ø 14 mm)	E2D111
Mounting rod straight Ø 14 mm / M12	E20939
Mounting and fine adjustment unit for O1D laser devices (rod or free-standing; depending on the clamp)	E1D100

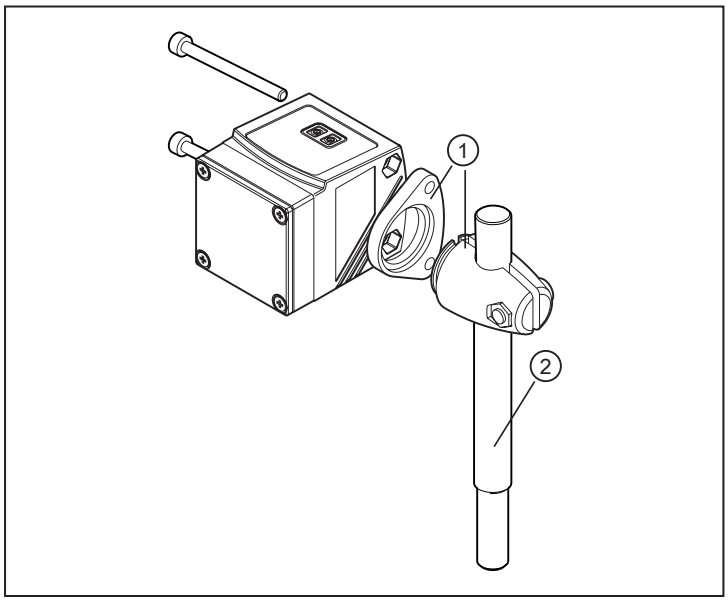

1: Mounting set for rod Ø 12 mm
Art. no. E2D101
2: Mounting rod straight Ø 12 mm / M10
Art. no. E20938

Fig. 1: Installation example

6 Electrical connection

The device must be connected by a qualified electrician.

▶ Observe the national and international regulations for the installation of electrical equipment.

▶ Voltage supply according to SELV, PELV.

▶ Disconnect power.

▶ Connect the device as follows:

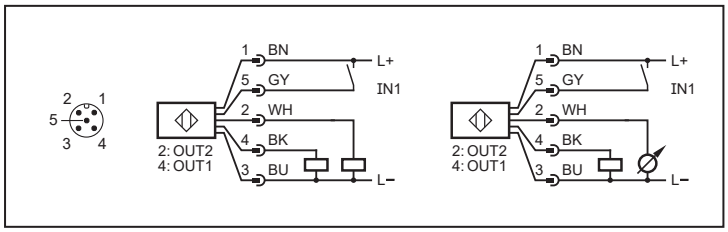

Fig. 2: Wiring diagram (colours to DIN EN 60947-5-2)

1 =	BN (brown)	2 =	WH (white)
3 =	BU (blue)	4 =	BK (black)
5 =	GY (grey)		

6.1 Operation with IO-Link master

The unit is compatible with IO-Link master port class A (type A).

For operation with IO-Link master port class B (type B) observe the following:

As a standard, the unit is not compatible with master port class B (type B). Pin 2 [OU2] and pin 5 [IN1] are used for manufacturer-specific functions. That means that the main supply voltage of the unit and the additional voltage supply (master port class B on pins 2/5) are not electrically isolated.

With the following configurations the unit can be used with master port class B:

- Connect unit and IO-Link master via 3 wires: Connect pins 1, 3 and 4 of the unit with the IO-Link master (do not connect pins 2 and 5).
- Connect unit and IO-Link master via 4 wires: Deactivate pin 2 (OU2) via IO-Link (setting OU2 = "off") and connect pins 1, 2, 3 and 4 of the unit with the IO-Link master (do not connect pin 5).

7 Operating and display elements

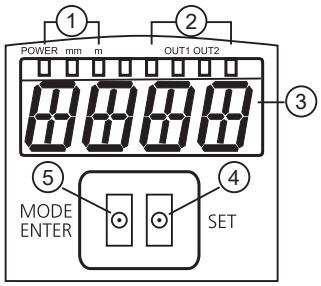

1:	4x green LED	Lighting LED = power and set display unit (mm, m)
2:	4x yellow LED	Indication of the switching status; Is on if the corresponding output is switched.
3:	4-digit alphanumeric display	Indication of the measured distance, the parameters and parameter values.
4:	Programming button [SET]	Setting of the parameter values (scrolling by holding pressed, incrementally by pressing once).
5:	Programming button [MODE/ENTER]	Selection of the parameters and acknowledgement of the parameter values

8 Menu

8.1 Menu structure

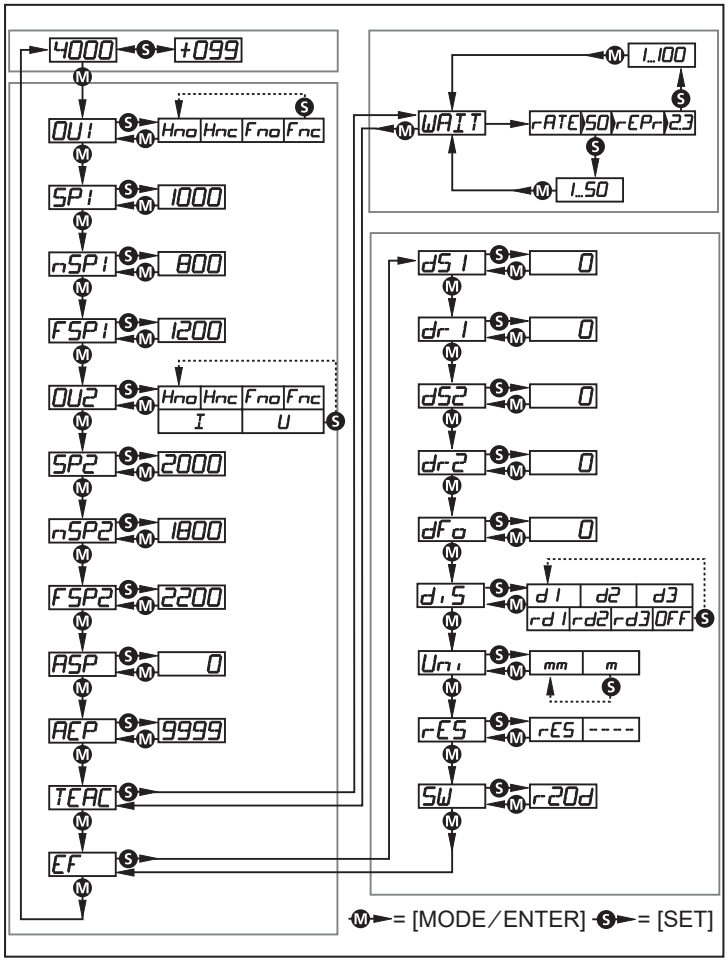

8.2 Explanation of the menu

Parameter	Explanation
[OU1]	**Configuration for output 1** 4 switching functions can be selected: [Hno], [Hnc], [Fno], [Fnc] Configure OUT1 (→ 🗋 15)
[SP1]	**Switch point for hysteresis function OUT1** Limit value at which the output with selected hysteresis function changes its switching state (object nearer/farther than distance set). [SP1] is only active if [OU1] = [Hno] or [Hnc]. Setting of the switch point for hysteresis function OUT1 (→ 🗋 16)
[nSP1] [FSP1]	**Switch points for window function OUT1** Values at which the output with selected window function changes its switching state (object present / not present between the distance "near" and the distance "far"). [nSP1] = switch point "near" / [FSP1] = switch point "far". [nSP1] / [FSP1] are only active if [OU1] = [Fno] or [Fnc]. Setting of the switch points for window function OUT1 (→ 🗋 17)

Parameter	Explanation
[OU2]	**Configuration for output 2** 4 switching functions and 2 analogue signals can be selected: [Hno], [Hnc], [Fno], [Fnc], [I], [U] Configure OUT2 (→ 🗋 17)
[SP2]	**Switch point for hysteresis function OUT2** Limit value at which the output with selected hysteresis function changes its switching state (object nearer/farther than distance set). [SP2] is only active if [OU2] = [Hno] or [Hnc]. Setting of the switch point for hysteresis function OUT2 (→ 🗋 18)
[nSP2] [FSP2]	**Switch points for window function OUT2** Values at which the output with selected window function changes its switching state (object present / not present between the distance "near" and the distance "far"). [nSP2] = switch point "near" / [FSP2] = switch point "far". [nSP2] / [FSP2] are only active if [OU2] = [Fno] or [Fnc]. Setting of the switch points for window function OUT2 (→ 🗋 18)
[ASP]	**Analogue start point** Measured value at which 4 mA / 0 V are provided. [ASP] is only active if [OU2] = [I] or [U]. Scaling of the measuring range (analogue output) (→ 🗋 18)
[AEP]	**Analogue end point** Measured value at which 20 mA / 10 V are provided. [AEP] is only active if [OU2] = [I] or [U]. Scaling of the measuring range (analogue output) (→ 🗋 18)
[TEAC]	**Teach mode** Selection "sampling rate" or "repeatability" Teach mode (→ 🗋 19)
[EF]	**Extended functions** Press [SET] to open the submenu "Extended functions". Extended functions (→ 🗋 20)
[dS1] [dr1] [dS2] [dr2]	**Delay for the switching outputs** [dSx] = switch-on delay; [drx] = switch-off delay. The output does not immediately change its switching state when the switching condition is met but only after the delay has elapsed. If the switching condition is no longer met after the delay has elapsed, the switching state of the output does not change. [dS2] and [dr2] are not effective if [OU2] = [I] or [U]. Set the delay time for switching outputs (→ 🗋 20)
[dFo]	**Setting of the fault suppression time for switching outputs/analogue output** This function suppresses brief saturation of the measuring element (such saturation may result from direct reflection or strong fluctuations in brightness). During the set delay time, the latest valid value measured is displayed, the output signals remain unchanged. Setting of the fault suppression time for switching output / analogue output (→ 🗋 20)
[diS]	**Setting of the display** 7 settings can be selected: [d1], [d2], [d3], [rd1], [rd2], [rd3], [OFF] Set the display (→ 🗋 15)
[Uni]	**Setting of the display unit** Select the unit of measurement for [SP1], [SP2], [ASP], [AEP] Options: [[mm], [m] Selection of the display unit (→ 🗋 15)
[rES]	**Restore factory settings** Reset all parameters to factory setting (→ 🗋 20)
[SW]	**Display of the software version number** Display of the software version number (→ 🗋 21)

9 Operating modes

9.1 Run mode

The run mode is the normal operating mode.

After power on the unit is in the Run mode. It carries out its monitoring function and generates output signals according to the set parameters.

The display indicates the current distance, the yellow LEDs signal the switching state of the outputs.

9.2 Display mode

Indication of the parameters and the set parameter values.

▶ Briefly press [MODE/ENTER].

▷ The unit goes to the display mode. Internally it remains in the operating mode. The set parameter values can be read:

▶ To scroll through the parameters, briefly press[MODE/ENTER].

▶ To display the corresponding parameter value, briefly press [SET].

▷ After another 15 s the unit returns to the Run mode.

9.3 Object reflectivity

Indication of the object reflectivity.

▶ Press [SET] in the Run mode.

▷ The unit displays an orientation value for the object reflectivity (e.g. +100 corresponds to a white object, +020 corresponds to a grey object).

9.4 Programming mode

Setting a parameter value (→ 🗋 14)

10 Parameter setting

During parameter setting the unit remains internally in the operating mode. It continues its monitoring function with the existing parameters until the change has been completed.

10.1 General parameter setting

10.1.1 Setting a parameter value

Set the display unit [Uni] before the values for the parameters are defined. In case of subsequent changes of the display unit, rounding errors during internal conversion to other units may falsify the set values. Selection of the display unit (→ 🗋 15)

1	**Select Parameter** ▶ Press [MODE/ENTER] until the required parameter is displayed.
2	**Set parameter value** ▶ Press [SET] and keep it pressed. ▷ The current parameter value flashes for 5 s. ▶ Increase the setting value step by step by pressing the button once or continuously by holding it down.
	Decrease the value: let the display move to the maximum setting value. Then the cycle starts again at the minimum setting value.
3	**Confirmation of the parameter value** ▶ Briefly press [MODE/ENTER]. ▷ The parameter is displayed again; the new parameter value is effective.
4	**Set other parameters** ▶ Start again with step 1.
5	**Finish parameter setting** ▶ Wait for 15 s or press [MODE/ENTER]. ▷ The current measured value is displayed.

10.1.2 Change from menu level 1 to menu level 2

▶ Repeatedly press [MODE/ENTER] until [EF] is displayed.

▶ Briefly press [SET].

▷ The first parameter of the submenu is displayed.

10.1.3 Electronic lock

The unit can be locked electronically to prevent unauthorised setting. On delivery the unit is not locked.

Locking

▶ Make sure that the unit is in the normal operating mode.

▶ Keep [MODE/ENTER] + [SET] pressed until [Loc] is displayed.

▷ The unit is locked.

[Loc] is displayed briefly if you try to change parameter values on the locked unit during operation.

Unlocking

▶ Keep [MODE/ENTER] + [SET] pressed until [uLoc] is displayed.

▷ The unit is unlocked.

If no button is pressed for 15 s during the setting procedure, the unit returns to the Run mode with unchanged values.

10.2 Configuration of the basic settings

10.2.1 Selection of the display unit

Set [Uni] before defining the values for the parameters [SPx], [nSPx], [FSPx], [ASP], [AEP]. In case of subsequent changes of the display unit rounding errors during internal conversion to other units may falsify the set values.

▶ Change to [EF].

▶ Select [Uni] and set the unit of measurement. Selection of the unit of measurement: [mm], [m]

▶ Confirm with [MODE/ENTER].

▷ The selected unit is indicated by a green LED on the display.

10.2.2 Set the display

▶ Change to [EF].

▶ Select [diS] and make settings.

7 settings can be selected:

- [d1] = update of the measured values every 50 ms.
- [d2] = update of the measured values every 200 ms.
- [d3] = update of the measured values every 600 ms.
- [rd1], [rd2], [rd3] = display as for [d1], [d2], [d3] rotated by 180°.
  The update of the measured value only refers to the display. It has no effect on the outputs.
- [OFF] = the measured value display is deactivated in the Run mode.
  When one button is pressed, the current measured value is displayed for 15 s.

▶ Confirm with [MODE/ENTER].

The LEDs remain active even if the display is deactivated.

10.2.3 Configure OUT1

▶ Select [OU1] and set the switching functions.

Switching functions:

- [Hno] = hysteresis function / normally open
- [Hnc] = hysteresis function / normally closed
- [Fno] = window function / normally open
- [Fnc] = window function / normally closed

▶ Confirm with [MODE/ENTER].

10.2.4 Hysteresis function

The hysteresis keeps the switching state of the output stable if the measured value varies about the sensing range. In both cases the set and reset points are symmetrically arranged about the selected switch point [SPx]. The hysteresis is the distance between set and reset points; it is calculated on the basis of the repeatability with a safety factor of 1.5. The calculation is based on the repeatability for max. 40 klx.

Example Hno

1. For the output function [Hno] the output switches when the object approaches and when the set point (A) is reached.

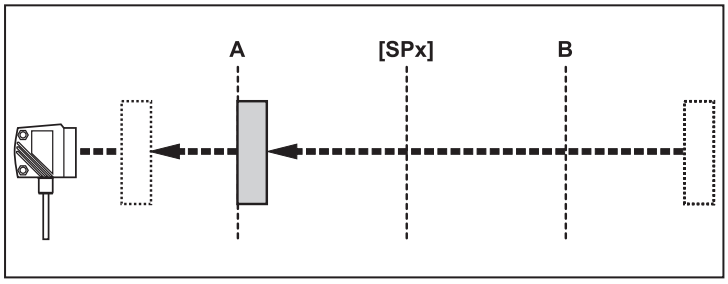

[SPx]: Switch point A: Switch-on point
B: Reset point

2. When the object is removed again, the output does not switch back before the reset point (B) is exceeded. The reset point (B) is above the set point (A).

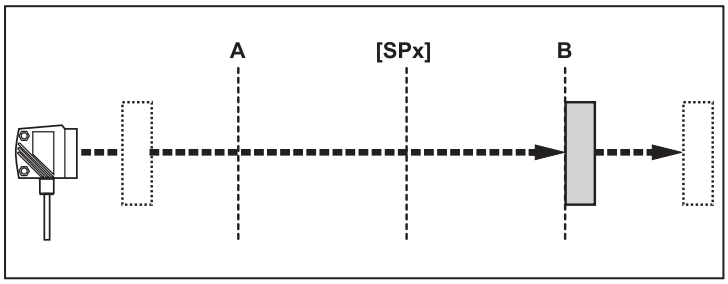

[SPx]: Switch point A: Switch-on point
B: Reset point

If the output function [Hnc] has been selected, the set and reset points are reversed. The output switches off when the object approaches. When the object is removed again, the output switches.

Switching state of the outputs

Output function	Object distance (D)	switching status
[Hno]	D < [SPx]	Closed
	D > [SPx]	Open
[Hnc]	D < [SPx]	Open
	D > [SPx]	Closed

10.2.5 Setting of the switch point for hysteresis function OUT1

▶ Under [OU1], select the output function [Hno] or [Hnc].

▶ Confirm with [MODE/ENTER].

▶ Select [SP1] and set the switch point.

▶ Confirm with [MODE/ENTER].

10.2.6 Window function

It is possible to define a window for the object recognition for each of the two outputs (OUT1 / OUT2).

Switches off when the object is detected

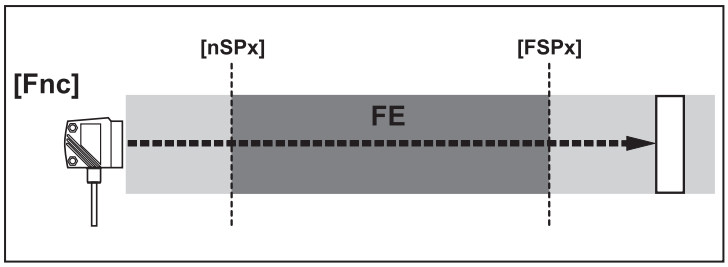

[nSPx]: switch point "near" [FSPx]: switch point "far"
FE: window

If the measured value is etween the switch point “near” [nSPx] and the switch point “far” [FSPx], the output is opent (if [OUx] = [Fnc]).

Switches when the object is detected

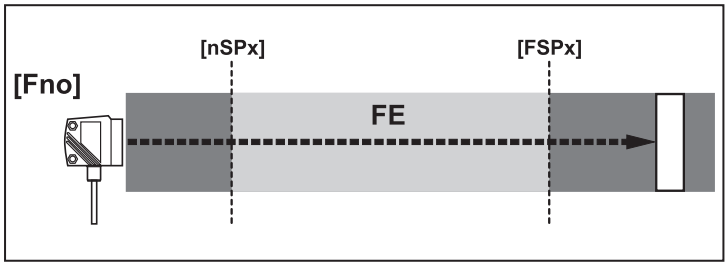

[nSPx]: switch point "near" [FSPx]: switch point "far"
FE: window

If the measured value is between the switch point "near” [nSPx] and the switch point "far" [FSPx], the output is closed (if [OUx] = [Fno]).

Switching state of the outputs

Output function	Object distance (D)	switching status
[Fno]	D < [nSPx]	Open
	D > [FSPx]	
	[nSPx] < D < [FSPx]	Closed
[Fnc]	D < [nSPx]	Closed
	D > [FSPx]	
	[nSPx] < D < [FSPx]	Open

Both window limits([nSPx] and [FSPx]) work with a switching hysteresis.

10.2.7 Setting of the switch points for window function OUT1

- ▶ Under [OU1], select the output function [Fno] or [Fnc].
- ▶ Confirm with [MODE/ENTER].
- ▶ Select [nSP1] and set the switch point “near”.
- ▶ Confirm with [MODE/ENTER].
- ▶ Select [FSP1] nd set the switch point "far".
- ▶ Confirm with [MODE/ENTER].

10.2.8 Configure OUT2

- ▶ Select [OU2].
- ▶ Set switching functions or analogue signals:

- [Hno] = hysteresis function / normally open
- [Hnc] = hysteresis function / normally closed
- [Fno] = window function / normally open
- [Fnc] = window function / normally closed
- [I] = current output analogue 4...20 mA:
- [U] = voltage output analogue 0...10 V

▶ Confirm with [MODE/ENTER].

10.2.9 Setting of the switch point for hysteresis function OUT2

▶ Select [OU2], [Hno] or [Hnc].

▶ Confirm with [MODE/ENTER].

▶ Select [SP2] and set the switch point.

▶ Confirm with [MODE/ENTER].

Hysteresis function (→ 🗋 15)

10.2.10 Setting of the switch points for window function OUT2

▶ Select [OU2], [Fno] or [Fnc].

▶ Confirm with [MODE/ENTER].

▶ Select [nSP2] and set the switch point “near”.

▶ Confirm with [MODE/ENTER].

▶ Select [FSP2] nd set the switch point "far".

▶ Confirm with [MODE/ENTER].

Window function (→ 🗋 16)

10.2.11 Scaling of the measuring range (analogue output)

▶ Select [OU2], [I] or [U].

▶ Confirm with [MODE/ENTER].

▶ Select [ASP] and set the "Analogue start point". With [ASP]], you define at which measured value the output signal is 4 mA / 0 V.

▶ Confirm with [MODE/ENTER].

▶ Select [AEP] and set the "Analogue end point". With [AEP]], you define at which measured value the output signal is 20 mA / 10 V. It can also be selected so that it is located before [ASP]. This implements a falling edge.

▶ Confirm with [MODE/ENTER].

Minimum distance between [ASP] and [AEP]: 100 mm

When the minimum distance is not reached, the error message [SIZE] will be displayed.

Current output 4...20 mA

Factory setting	Measuring range scaled

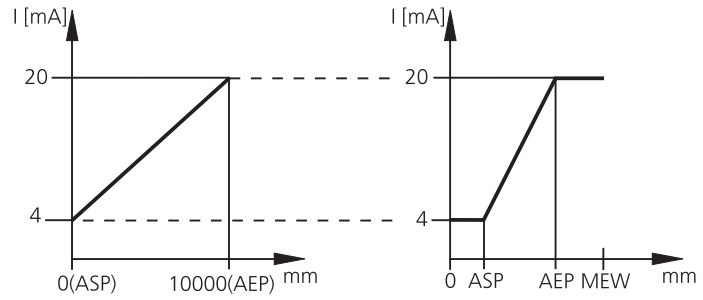

MEW: Final value of the measuring range

In the set measuring range the output signal is between 4 and 20 mA.

Faults are also displayed:
Too much light or object too near: 3.5 mA for a rising edge ([ASP] < [AEP]), 20.5 mA for a falling edge ([ASP] > [AEP]).

Object too far or no object present:
20.5 mA for rising edge. 3.5 mA for falling edge.

Voltage output 0...10 V

Factory setting	Measuring range scaled

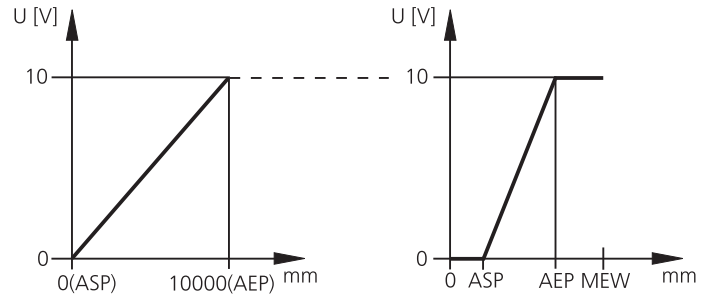

MEW: Final value of the measuring range

In the set measuring range the output signal is between 0 and 10 V.

10.3 Teach mode

10.3.1 Setting of the sampling rate

The sampling rate indicates the maximum time after which a new result of measurement is provided and the outputs are updated. The switching frequency is typ. approx. 1/3 of the sampling rate.

▶ Select [TEAC] and keep [SET] pressed until [WAIT] is displayed.

▷ [rATE] and [rEPr] are displayed alternately.

▶ If [rATE] is displayed: Press [SET] until the preset sampling rate value flashes.

▶ Enter a value incrementally by pressing [SET] repeatedly.

▶ Confirm with [MODE/ENTER].

▷ [WAIT] is displayed while the repeatability [rEPr] is calculated.

▷ The sampling rate [rATE] and repeatability [rEPr] are displayed alternately.

10.3.2 Setting of the repeatability

▶ Select [TEAC] and keep [SET] pressed until [WAIT] is displayed.

▷ [rATE] and [rEPr] are displayed alternately.

▶ If [rEPr] is displayed: Press [SET] until the preset repeatability value flashes.

▶ Enter a value incrementally by pressing [SET] repeatedly.

▶ Confirm with [MODE/ENTER].

▷ [WAIT] is displayed while the sampling rate [rATE] is calculated.

▷ The sampling rate [rATE] and repeatability [rEPr] are displayed alternately.

10.4 Extended functions

10.4.1 Set the delay time for switching outputs

▶ Select [EF].

▶ Press [SET] to change to the menu [EF].

▶ Select parameter with [MODE/ENTER]:

▶ [dSx] = switch-on delay; [drx] = switch-off delay

▶ Set the parameter value with [SET]:

▶ Setting range [s]: 0 / 0.1...5 s in steps of 0.1 s\(0 = delay time is not active)

▶ Confirm with [MODE/ENTER].

10.4.2 Setting of the fault suppression time for switching output / analogue output

▶ Select [EF].

▶ Press [SET] to change to the menu [EF].

▶ Select[dFo] (old designation: [dAP]).

▶ Set the parameter value with [SET]: Setting range [s]: 0.0...0.1...0.2...0.5...1...2...5.

▶ Confirm with [MODE/ENTER].

With [dFo], the error types "too much light" and "not enough light" are suppressed. (→ Error indications 🗋 22)

10.4.3 Reset all parameters to factory setting

▶ Select [EF].

▶ Press [SET] to change to the menu [EF].

▶ Select [rES] and keep [SET] pressed until [----] is displayed.

▶ Confirm with [MODE/ENTER].

▷ The unit changes to the Run mode.

10.4.4 Display of the software version number

▶ Select [EF].

▶ Press [SET] to change to the menu [EF].

▶ Select[SW], then press [SET].

▷ The software version number is displayed.

▶ Press [MODE/ENTER] to return to the menu [EF].

11 Operation

▶ After installation, electrical connection and programming, check whether the unit operates correctly.

▷ If the unit has been correctly set up, the distance to the object is indicated.

Lifetime of a laser diode: 50000 hours.

11.1 Error indications

Indication	Possible cause	Switching output				Current output / voltage output		IO-Link process value distance[3]	IO-Link process - value object reflectivity[3]
		[Hno]	[Hnc]	[Fno]	[Fnc]	[ASP] < [AEP]	[ASP] > [AEP]		
[++]	too much light, e.g. reflective surface	ON	OFF	OFF	ON	3.5 mA / 0 V	20.5 mA / 10 V	NoData	OL
[--]	not enough light, no object	OFF	ON	OFF	ON	20.5 mA / 10 V	3.5 mA / 0 V	NoData	UL
[nEAr]	object to be measured outside the measuring range < 0.2 m	ON	OFF	OFF	ON	3.5 mA / 0 V	20.5 mA / 10 V	UL	NoData
[FAr]	object to be measured outside the measuring range > 10 m	OFF	ON	OFF	ON	20.5 mA / 10 V	3.5 mA / 0 V	OL	NoData
[Errp]	plausibility (e.g. object too fast)	X[1]	X[1]	X[1]	X[1]	X[1]	X[1]	X[1]	X[1]
[LoFF]	laser switched off	OFF	ON	OFF	ON	20.5 mA / 10 V	3.5 mA / 0 V	NoData	NoData
[SC1]	short circuit in switching output 1					[2]	[2]	n.a.	n.a.
[SC2]	short circuit in switching output 2					[2]	[2]	X[1]	X[1]
[SC]	short circuit in all switching outputs					[2]	[2]	n.a.	n.a.

[1] unchanged

[2] [SC1] or [SC] only active if output 2 is configured as switching output.

[3] see IODD of the device

12 Maintenance, repair and disposal

- ▶ Keep the lenses of the sensor free from soiling.
- ▶ For cleaning do not use any solvents or cleaning agents which could damage the plastic parts.
- ▶ After use dispose of the unit in an environmentally friendly way in accordance with the applicable national regulations.

Faulty sensors must only be repaired by the manufacturer.