RU6040

Incremental encoder with solid shaft

RU-3600-I24/L2

phase-out article

Alternative articles: RUP500 + E12402
When selecting an alternative article and accessories please note that technical data may differ!

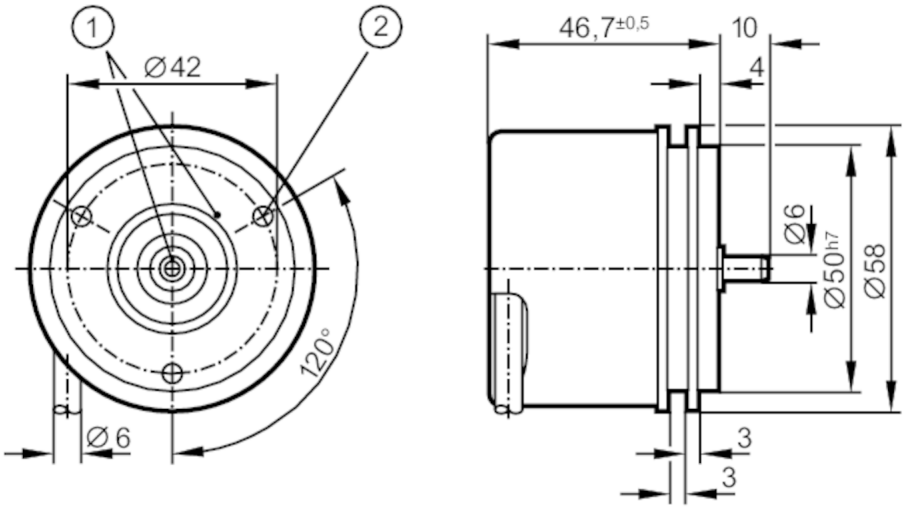

1 reference mark
2 M4 Depth 5 mm

Product characteristics		
Resolution		3600 resolution
Shaft design		solid shaft
Shaft diameter	[mm]	6
Application		
Function principle		incremental
Electrical data		
Operating voltage	[V]	10...30 DC
Current consumption	[mA]	< 150
Outputs		
Electrical design		HTL
Max. current load per output	[mA]	50
Switching frequency	[kHz]	300
Type of short-circuit protection		< 60 s
Phase difference A and B	[°]	90
Measuring/setting range		
Resolution		3600 resolution
Operating conditions		
Ambient temperature	[°C]	-40...100
Note on ambient temperature		for firmly laid cable: -40 °C

RU6040

Incremental encoder with solid shaft

RU-3600-I24/L2

Max. relative air humidity	[%]	98
Protection		IP 64; (on the housing: IP 67; on the shaft: IP 64)

Tests / approvals

Shock resistance		200 g
Vibration resistance		30 g
MTTF	[years]	190

Mechanical data

Weight	[g]	484.6
Housing		cylindrical
Dimensions	[mm]	Ø 58 / L = 46.7
Materials		aluminium
Max. revolution, mechanical	[U/min]	16000
Max. starting torque	[Nm]	0.01
Reference temperature torque	[°C]	20
Shaft design		solid shaft
Shaft diameter	[mm]	6
Shaft material		steel (1.4104)
Max. shaft load axial (at the shaft end)	[N]	10
Max. shaft load radial (at the shaft end)	[N]	20
Fixing flange		synchro-flange

Remarks

Pack quantity	1 pcs.

Electrical connection

Cable: 2 m, PUR; Maximum cable length: 300 m; radial, can also be used axially

brown	A
green	A inverted
grey	B
pink	B inverted
red	0 index
black	0 index inverted
blue	L+ sensor
white	0V sensor
brown/green	L+ (Up)
white/green	0V (Un)
lilac	failure inverted
screen	housing

Diagrams and graphs

Pulse diagram

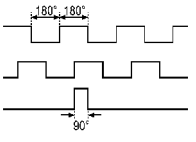

direction of rotation clockwise (looking at the shaft)