FRK(R) 95 Diffuse reflection light scanner with background suppression



20 … 500 mm

10 - 30 V
DC

- Scanner with adjustable background suppression using visible red light for fast and easy alignment
- Scanner with adjustable background suppression using infrared light for inclined and/or shiny surfaces
- Very good black/white performance, exact adjustment via multiturn potentiometer
- High switching frequency for detection of fast events

IEC 60947...
IEC 60947...
IP 69K
IP 67

Accessories:

(available separately)

- Mounting systems (BT 95, UMS 1)
- M12 connectors (KD …)

Dimensioned drawing

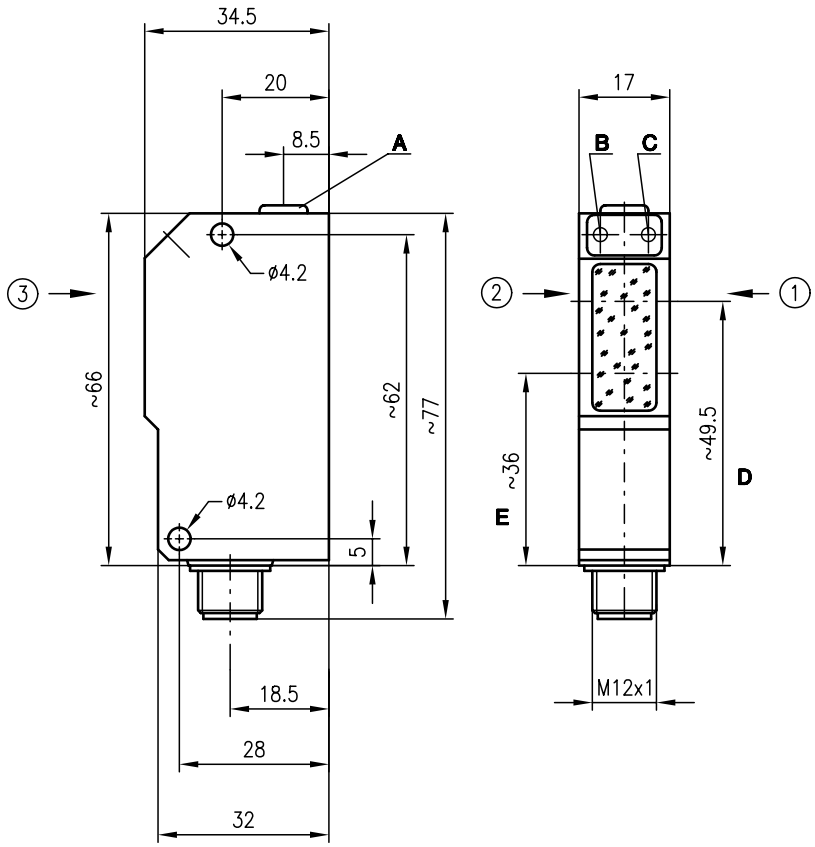

A Scanning range adjustment
B Switching indicator yellow
C Operation indicator green
D Optical axis receiver
E Optical axis transmitter
Preferred entry direction for objects ①+②+③

Electrical connection

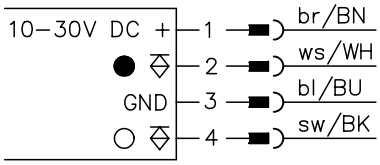

We reserve the right to make changes • 95_d05e.fm

Specifications

Optical data	FRKR 95/44-350 L	FRK 95/44-350 L
Typ. scanning range limit (white 90%) [1]	20 … 500mm	
Scanning range [2]	see tables	
Adjustment range	60 … 500mm	
Light beam characteristic	focussed	
Light source	LED (modulated light)	
Wavelength	660nm (red light)	880 nm (infrared light)
Timing		
Switching frequency	1000Hz	
Response time	0.5ms	
Delay before start-up	≤ 100ms	
Electrical data		
Operating voltage U_B	10 … 30VDC (incl. residual ripple)	
Residual ripple	≤ 15% of U_B	
Bias current	≤ 35mA	
Switching output	2 PNP transistor outputs, complementary	
Function characteristics	light/dark switching	
Signal voltage high/low	≥ (U_B-2V)/≤ 2V	
Output current	max. 100mA	
Indicators		
LED green	ready	
LED yellow	reflection	
Mechanical data		
Housing	diecast zinc	
Optics cover	glass	
Weight	90g	
Connection type	M12 connector, stainless steel, 4-pin	
Environmental data		
Ambient temp. (operation/storage) [3]	25°C (-30°C) … +60°C/-40°C … +70°C	
Protective circuit [4]	2, 3	
VDE safety class [5]	II, all-insulated	
Protection class	IP 67, IP 69K [6]	
LED class	1 (acc. to EN 60825-1)	
Standards applied	IEC 60947-5-2	

1) Typ. scanning range limit: max. attainable range without performance reserve
2) Scanning range: recommended range with performance reserve
3) -30°C with operating voltage continuously applied
4) 2=polarity reversal protection, 3=short-circuit protection for all outputs
5) Rating voltage 250VAC
6) IP 69K test acc. to DIN 40050 part 9 simulated, high pressure cleaning conditions without the use of additives, acids and bases are not part of the test

Order guide

	Designation	Part No.
Red light	FRKR 95/44-350 L	500 34514
Infrared light	FRK 95/44-350 L	500 34515

Tables

1	5	350	500
2	20	328	440
3	25	300	350

1	white 90%
2	grey 18%
3	black 6%

Scanning range [mm]
Typ. scanning range limit [mm]

Diagrams

Typ. response behaviour (white 90%)

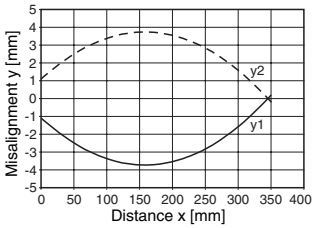

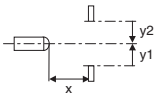

Typ. black/white behaviour

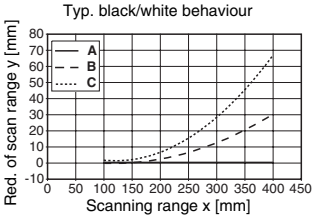

A white 90%
B grey 18%
C black 6%

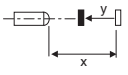

Remarks

- With the set scanning range, a tolerance of the upper scanning range limit is possible depending on the reflection properties of the material surface.