HRTL 8 Laser diffuse reflection light scanner with background suppression

en 09-2014/09 50116483-02



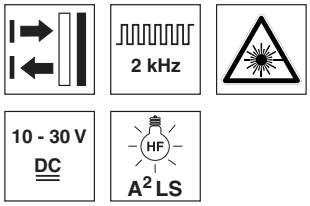

- Laser-generated red light, laser class 2
- Adjustable background suppression
- A²LS - Active Ambient Light Suppression
- Push-pull switching outputs
- M12 turning connector or cable connection

Dimensioned drawing

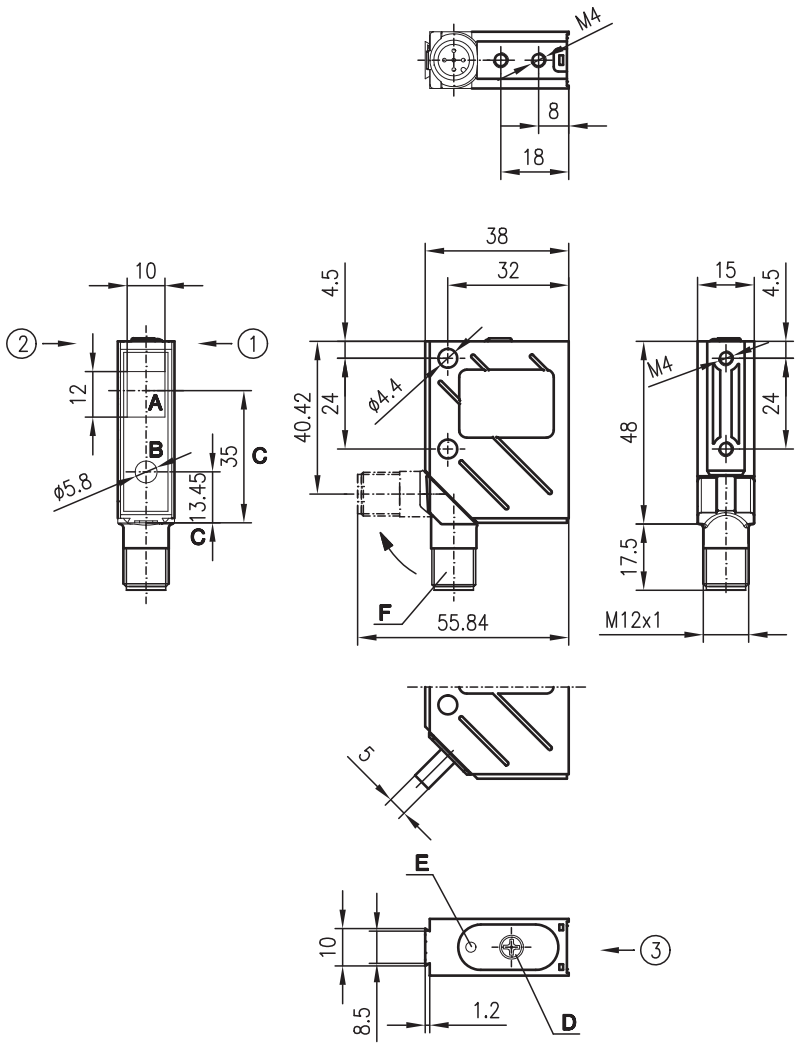

A Receiver
B Transmitter
C Optical axis
D Operational control
E Yellow LED
F Turning connector, 90°
Preferred entry direction for objects ①+②+③

Electrical connection

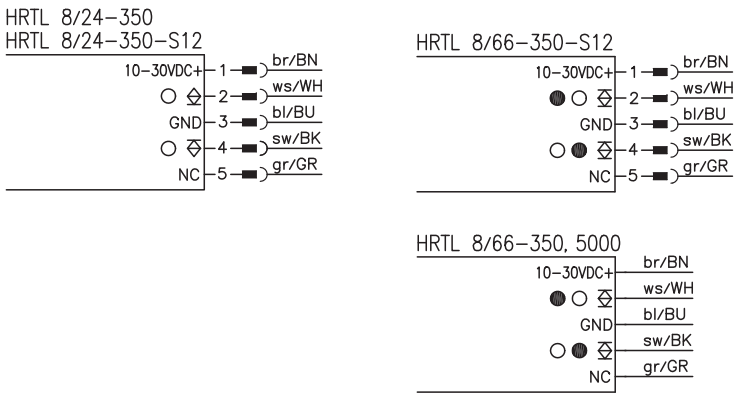



Accessories:

(available separately)

- M12 connectors (KD …)
- Ready-made cables (K-D …)
- Mounting systems
- Control guard

We reserve the right to make changes • DS_HRTL8_350_en_50116483_02.fm

Specifications

Optical data		**Laser class 2**
Typ. scanning range limit (white 90 %) [1]		5 … 400 mm
Scanning range [2]		see tables
Mechanical adjustment range		50 … 400 mm
Light beam characteristic		focussed
Beam spread		≥ 0.5 mrad
Light source		laser
Wavelength		655 nm (visible red light)
Max. output power		3 mW
Pulse duration		≤ 8 µs
Timing		
Switching frequency		2000 Hz
Response time		0.25 ms
Delay before start-up		≤ 100 ms
Electrical data		
Operating voltage U_B [3]		10 … 30 VDC
Residual ripple		≤ 15 % of U_B
Open-circuit current		≤ 35 mA
Signal voltage high/low		≥ (U_B-2V)/≤ 2V
Switching output/function	…/24	PNP and NPN transistor output, light switching
	…/66	2 push-pull switching outputs [4] pin 2: PNP dark switching, NPN light switching pin 4: PNP light switching, NPN dark switching
Output current		max. 100 mA
Scanning range adjustment		mechanical via multiturn potentiometer
Indicators		
Yellow LED		object detected
Mechanical data		
Housing		metal
Optics cover		glass
Weight (plug/cable)		70 g/140 g
Connection type		M12 connector, 5-pin or cable: 2000 mm, 5x0.25 mm²
Environmental data		
Ambient temp. (operation/storage)		-10 °C … +40 °C/-40 °C … +70 °C
Protective circuit [5]		2, 3
VDE safety class [6]		II, all-insulated
Protection class [7]		IP 67, IP 69K [8]
Laser class		2 (acc. to EN 60825-1)
Standards applied		IEC 60947-5-2
Certifications		UL 508, C22.2 No.14-13 [3] [9]

1) Typ. scanning range limit: max. attainable range without performance reserve
2) Scanning range: recommended range with performance reserve
3) For UL applications: for use in class 2 circuits according to NEC only
4) The push-pull switching outputs must not be connected in parallel
5) 2=polarity reversal protection, 3=short-circuit protection for all outputs
6) Rating voltage 250 VAC
7) In stop position of the turning connector (turning connector locked)
8) IP 69K test acc. to DIN 40050 part 9 simulated, high pressure cleaning conditions without the use of additives, acids and bases are not part of the test
9) These proximity switches shall be used with UL Listed Cable assemblies rated 30 V, 0.5 A min, in the field installation, or equivalent (categories: CYJV/CYJV7 or PVVA/PVVA7)

Operate in accordance with intended use!

- This product is not a safety sensor and is not intended as personnel protection.
- The product may only be put into operation by competent persons.
- Only use the product in accordance with the intended use.

Order guide

	Designation	Part No.
With M12 connector	HRTL 8/24-350-S12	50036370
With 2 m cable	HRTL 8/24-350	50036371
With M12 connector	HRTL 8/66-350-S12	50102705
With 5 m cable	HRTL 8/66-350, 5000	50103709

Tables

1	7	350	400
2	10	330	370
3	12	300	340

1	white 90 %
2	gray 18 %
3	black 6 %

Scanning range [mm]
Typ. scanning range limit [mm]

Diagrams

Typ. response behaviour (white 90 %)

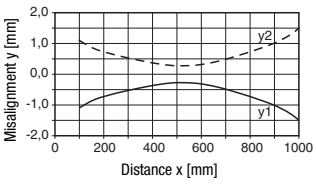

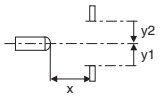

Typ. black/white behaviour

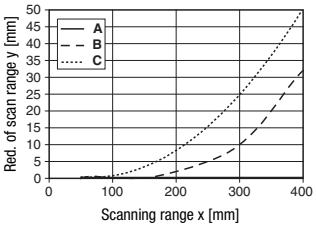

A white 90 %
B gray 18 %
C black 6 %

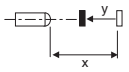

Typ. light spot

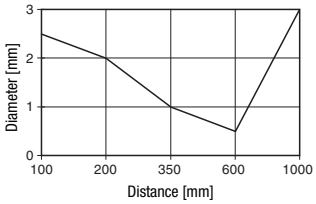

Remarks

- Install sensor inclined at angle of approx. 10° if used to detect objects with shiny surfaces.

HRTL 8 Laser diffuse reflection light scanner with background suppression

Laser safety notices

ATTENTION, LASER RADIATION – LASER CLASS 2

Never look directly into the beam!

The device fulfills the EN 60825-1:2008-05 (IEC 60825-1:2007) safety regulations for a product in **laser class 2** as well as the U.S. 21 CFR 1040.10 regulations with deviations corresponding to "Laser Notice No. 50" from June 24th, 2007.

- Never look directly into the laser beam or in the direction of reflecting laser beams!
  If you look into the beam path over a longer time period, there is a risk of injury to the retina.
- Do not point the laser beam of the device at persons!
- Intercept the laser beam with an opaque, non-reflective object if the laser beam is accidentally directed towards a person.
- When mounting and aligning the device, avoid reflections of the laser beam off reflective surfaces!
- CAUTION! Use of controls or adjustments or performance of procedures other than specified herein may result in hazardous light exposure.
  The use of optical instruments or devices (e.g., magnifying glasses, binoculars) with the product will increase eye hazard.
- Adhere to the applicable legal and local regulations regarding protection from laser beams acc. to EN 60825 (IEC 60825) in its latest version.
- The device must not be tampered with and must not be changed in any way.
  There are no user-serviceable parts inside the device.
  Repairs must only be performed by Leuze electronic GmbH + Co. KG.

NOTICE

Affix laser information and warning signs!

Laser information and warning signs are affixed to the device(see ①). In addition, self-adhesive laser information and warning signs (stick-on labels) are supplied in several languages (see ②).

- Affix the laser information sheet with the language appropriate for the place of use to the device.
  When using the device in the US, use the stick-on label with the "Complies with 21 CFR 1040.10" notice.
- Affix the laser information and warning signs near the device if no signs are attached to the device (e.g. because the device is too small) or if the attached laser information and warning signs are concealed due to the installation position.
  Affix the laser information and warning signs so that they are legible without exposing the reader to the laser radiation of the device or other optical radiation.

①

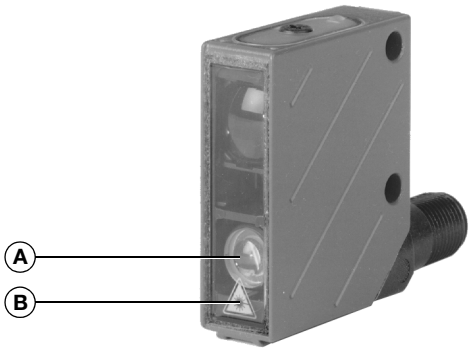

A Laser exit opening
B Laser warning sign

②

