SMART
SENSOR
BUSINESS

Leuze electronic

the sensor people





Figure can vary

Part no.: 50139656
PRK25CL1.1/4P-M12
Polarized retro-reflective photoelectric sensor

Contents

- Technical data
- Dimensioned drawings
- Electrical connection
- Diagrams
- Operation and display
- Reflectors & reflective tapes
- Part number code
- Notes
- Accessories

Leuze electronic GmbH + Co. KG, In der Braike 1, 73277 Owen
Phone: +49 7021 573-0, Fax: +49 7021 573-199
info@leuze.com • www.leuze.com

Technical data

Basic data	
Series	25C
Operating principle	Reflection principle

Optical data	
Operating range	Guaranteed operating range
Operating range	0.2 ... 20 m , With reflector TK(S) 100x100
Operating range limit	Typical operating range
Operating range limit	0.15 ... 25 m , With reflector TK(S) 100x100
Beam profile	Collimated
Light source	Laser , Red
Laser light wavelength	650 nm
Laser class	1 , IEC/EN 60825-1:2007
Max. laser power	0.0021 W
Transmitted-signal shape	Pulsed
Pulse duration	4.5 µs
Light spot size [at sensor distance]	3 mm x 5 mm [1,000 mm]
Type of light spot geometry	elliptic
Shift angle	Typ. ± 1.5°

Electrical data	
Protective circuit	Polarity reversal protection Short circuit protected
Performance data	
Supply voltage U_B	10 ... 30 V , DC , Incl. residual ripple
Residual ripple	0 ... 15 % , From U_B
Open-circuit current	0 ... 20 mA
Outputs	
Number of digital switching outputs	2 Piece(s)
Switching outputs	
Voltage type	DC
Switching current, max.	100 mA
Switching voltage	high: ≥(U_B-2.5V) low: ≤2.5V
Switching output 1	
Assignment	Connection 1, pin 4
Switching element	Transistor , PNP
Switching principle	Light switching
Switching output 2	
Assignment	Connection 1, pin 2
Switching element	Transistor , PNP
Switching principle	Dark switching

Timing	
Switching frequency	2,500 Hz
Response time	0.2 ms
Readiness delay	300 ms

Connection	
Connection 1	
Type of connection	Connector
Function	Signal OUT Voltage supply
Thread size	M12
Type	Male
Material	PUR
No. of pins	4 -pin
Encoding	A-coded

Mechanical data	
Dimension (W x H x L)	15 mm x 42.7 mm x 30 mm
Housing material	Plastic , ABS
Lens cover material	Plastic
Net weight	22 g
Housing color	Red
Type of fastening	Through-hole mounting with M4 thread Via optional mounting device
Compatibility of materials	ECOLAB

Operation and display	
Type of display	LED
Number of LEDs	2 Piece(s)
Operational controls	270° potentiometer
Function of the operational control	Sensitivity adjustment

Environmental data	
Ambient temperature, operation	-40 ... 60 °C
Ambient temperature, storage	-40 ... 70 °C

Certifications	
Degree of protection	IP 67 IP 69K
Protection class	III
Certifications	c UL US
Standards applied	IEC 60947-5-2

Classification	
Customs tariff number	85365019
eCl@ss 8.0	27270902
eCl@ss 9.0	27270902
ETIM 5.0	EC002717
ETIM 6.0	EC002717

Dimensioned drawings

All dimensions in millimeters

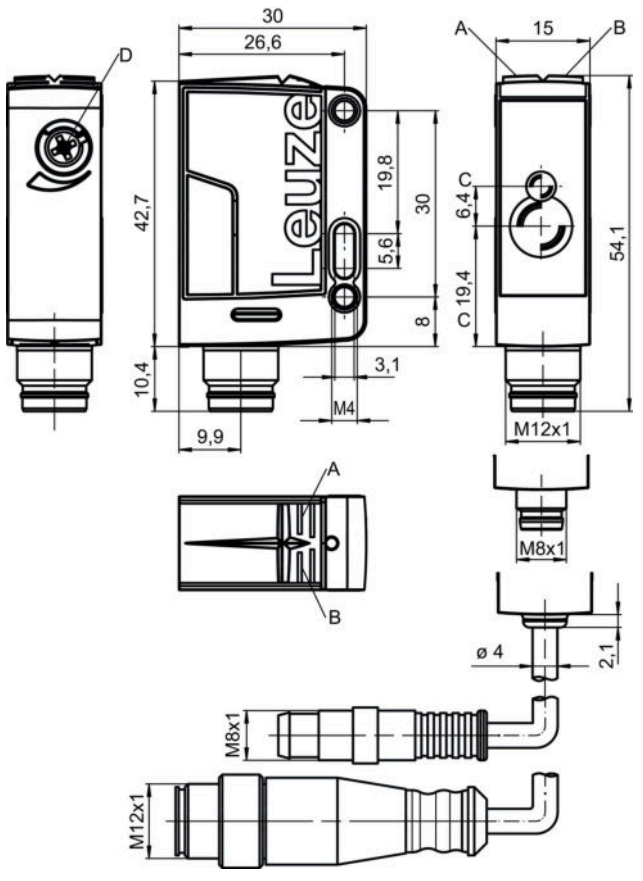

A Green LED
B Yellow LED
C Optical axis
D Potentiometer

Electrical connection

Connection 1	
Type of connection	Connector
Function	Signal OUT Voltage supply
Thread size	M12
Type	Male
Material	PUR
No. of pins	4 -pin
Encoding	A-coded

Pin	Pin assignment
1	V+
2	OUT 2
3	GND
4	OUT 1

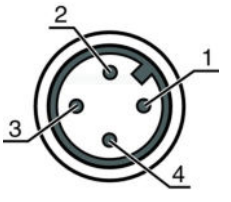

Diagrams

Typ. response behavior (TKS100x100)

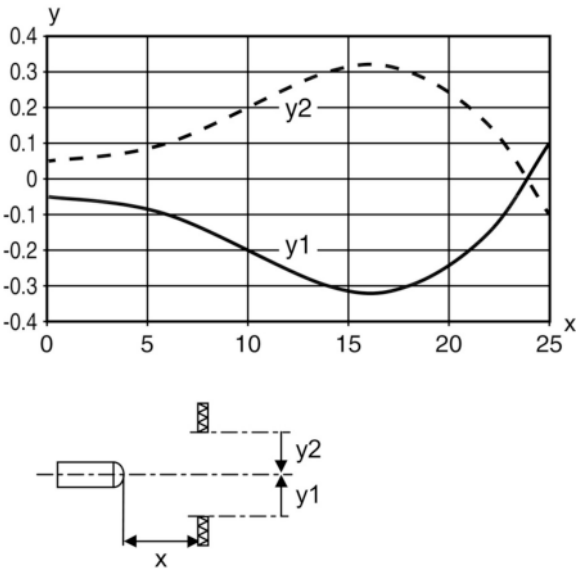

x Distance [m]
y Misalignment [m]

Typ. function reserve

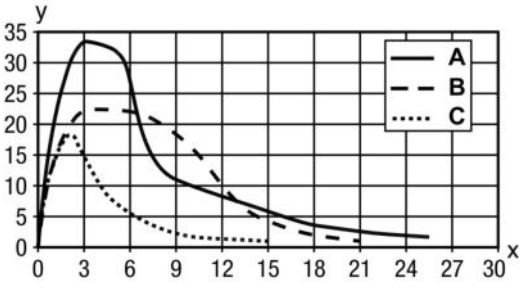

x Distance [m]
y Function reserve
A TKS 100x100
B MTKS 50x50.1
C REF 6-A-50x50 film

Operation and display

LEDs

LED	Display	Meaning
1	Green, continuous light	Operational readiness
2	Yellow, continuous light	Light path free
	Yellow, flashing	Light path free, no function reserve

Reflectors & reflective tapes

	Part no.	Designation	Operating range/ Operating range limit	Description
	50040895	MTKS 20x20	0.15 ... 7 m 0.12 ... 8 m	Design: Rectangular Reflective surface: 20 mm x 20 mm Triple reflector size: 1.2 mm Material: Plastic Base material: Plastic Chemical designation of the material: PMMA8N Fastening: Through-hole mounting, Adhesive
	50117583	MTKS 50x50.1	0.15 ... 15 m 0.12 ... 18 m	Design: Rectangular Reflective surface: 50 mm x 50 mm Triple reflector size: 1.2 mm Material: Plastic Base material: Plastic Chemical designation of the material: PMMA8N Fastening: Through-hole mounting, Adhesive
	50106119	REF 4-A-100x100	0.2 ... 2.2 m 0.15 ... 3 m	Design: Rectangular Reflective surface: 100 mm x 100 mm Material: Plastic Chemical designation of the material: PMMA Fastening: Self-adhesive
	50110192	REF 6-A-50x50	0.2 ... 10 m 0.15 ... 12 m	Design: Rectangular Reflective surface: 50 mm x 50 mm Triple reflector size: 0.3 mm Material: Plastic Chemical designation of the material: PMMA Fastening: Self-adhesive
	50022816	TKS 100X100	0.2 ... 20 m 0.15 ... 25 m	Design: Rectangular Reflective surface: 96 mm x 96 mm Triple reflector size: 4 mm Material: Plastic Base material: Plastic Chemical designation of the material: PMMA8N Fastening: Through-hole mounting, Adhesive
	50081283	TKS 20X40	0.2 ... 9 m 0.15 ... 11 m	Design: Rectangular Reflective surface: 16 mm x 38 mm Triple reflector size: 2.3 mm Material: Plastic Base material: Plastic Chemical designation of the material: PMMA8N Fastening: Through-hole mounting, Adhesive
	50040820	TKS 40X60	0.2 ... 15 m 0.15 ... 18 m	Design: Rectangular Reflective surface: 37 mm x 56 mm Triple reflector size: 4 mm Material: Plastic Base material: Plastic Chemical designation of the material: PMMA8N Fastening: Through-hole mounting, Adhesive

Part number code

Part designation: **AAA25C d EE-f.GGH/iJ-K**

AAA25C	**Operating principle / construction:** HT25C: diffuse reflection sensor with background suppression PRK25C: retro-reflective photoelectric sensor with polarization filter LS25C: throughbeam photoelectric sensor transmitter LE25C: throughbeam photoelectric sensor receiver

d	**Light type:** n/a: red light I: infrared light
EE	**Light source:** n/a: LED L1: laser class 1 L2: laser class 2
f	**Preset range (optional):** n/a: operating range acc. to data sheet XXXX: preset range [mm]
GG	**Equipment:** A: autocollimation principle (single lens) S: small light spot D: detection of stretch-wrapped objects X: extended model HF: suppression of HF illumination (LED) XL: extra long light spot T: autocollimation principle (single lens) for highly transparent bottles without tracking TT: autocollimation principle (single lens) for highly transparent bottles with tracking
H	**Operating range adjustment:** 1: 270° potentiometer 2: multiturn potentiometer 3: teach-in via button
i	**Switching output/function OUT 1/IN: Pin 4 or black conductor:** 2: NPN transistor output, light switching N: NPN transistor output, dark switching 4: PNP transistor output, light switching P: PNP transistor output, dark switching X: pin not used 8: activation input (activation with high signal)
J	**Switching output / function OUT 2/IN: pin 2 or white conductor:** 2: NPN transistor output, light switching N: NPN transistor output, dark switching 4: PNP transistor output, light switching P: PNP transistor output, dark switching W: warning output X: pin not used
K	**Electrical connection:** n/a: cable, standard length 2000 mm, 4-wire 200-M12: cable, length 200 mm with M12 connector, 4-pin, axial (plug) M8: M8 connector, 4-pin (plug) M12: M12 connector, 4-pin (plug) 200-M8: cable, length 200 mm with M8 connector, 4-pin, axial (plug)

Note

A list with all available device types can be found on the Leuze electronic website at www.leuze.com.

Notes

Observe intended use!

- This product is not a safety sensor and is not intended as personnel protection.
- The product may only be put into operation by competent persons.
- Only use the product in accordance with its intended use.

For UL applications:

- Only for use in "class 2" circuits
- These proximity switches shall be used with UL Listed Cable assemblies rated 30V, 0.5A min, in the field installation, or equivalent (categories: CYJV/CYJV7 or PVVA/PVVA7)

WARNING! LASER RADIATION – LASER CLASS 1

The device satisfies the requirements of IEC 60825-1:2007 (EN 60825-1:2007) safety regulations for a product of **laser class 1** as well as the U.S. 21 CFR 1040.10 regulations with deviations corresponding to "Laser Notice No. 50" from June 24, 2007.

- Observe the applicable statutory and local laser protection regulations.
- The device must not be tampered with and must not be changed in any way.
  There are no user-serviceable parts inside the device.
  Repairs must only be performed by Leuze electronic GmbH + Co. KG.

Accessories

Connection technology - Connection cables

	Part no.	Designation	Article	Description
	50130652	KD U-M12-4A-V1-050	Connection cable	Connection 1: Connector, M12, Axial, Female, A-coded, 4 -pin Connection 2: Open end Shielded: No Cable length: 5,000 mm Sheathing material: PVC
	50130690	KD U-M12-4W-V1-050	Connection cable	Connection 1: Connector, M12, Angled, Female, A-coded, 4 -pin Connection 2: Open end Shielded: No Cable length: 5,000 mm Sheathing material: PVC

Mounting technology - Mounting brackets

	Part no.	Designation	Article	Description
	50118543	BT 300M.5	Mounting bracket	Design of mounting device: Angle, L-shape Fastening, at system: Through-hole mounting Mounting bracket, at device: Screw type, Suited for M4 screws Type of mounting device: Adjustable Material: Stainless steel

Mounting technology - Rod mounts

	Part no.	Designation	Article	Description
	50117829	BTP 200M-D12	Mounting system	Design of mounting device: Protection hood Fastening, at system: For 12 mm rod Mounting bracket, at device: Screw type Type of mounting device: Clampable, Adjustable, Turning, 360° Material: Metal

Part no.: 50139656 – PRK25CL1.1/4P-M12 – Polarized retro-reflective

	Part no.	Designation	Article	Description
	50117252	BTU 300M-D12	Mounting system	Contains: 2x M4 x 25 screw, 2x M4 x 20 screw, 4x position washers Design of mounting device: Mounting system Fastening, at system: For 12 mm rod, Sheet-metal mounting Mounting bracket, at device: Screw type, Suited for M4 screws Type of mounting device: Clampable, Adjustable, Turning, 360° Material: Metal

Micro-triad-type reflectors

	Part no.	Designation	Article	Description
	50117583	MTKS 50x50.1	Reflector	Design: Rectangular Reflective surface: 50 mm x 50 mm Triple reflector size: 1.2 mm Material: Plastic Base material: Plastic Chemical designation of the material: PMMA8N Fastening: Through-hole mounting, Adhesive

Note
A list with all available accessories can be found on the Leuze electronic website in the Download tab of the article detailed page.