JY997D14001L Side B

MITSUBISHI ELECTRIC

Side A JAPANESE

Side B ENGLISH

Programmable Controller
MELSEC-F

FX3U-4DA-ADP

USER'S MANUAL

FX3U

Manual Number	JY997D14001
Revision	L
Date	December 2016

This manual describes the part names, dimensions, mounting, and specifications of the product. Before use, read this manual and the manuals of all relevant products fully to acquire proficiency in handling and operating the product. Make sure to learn all the product information, safety information, and precautions.
Store this manual in a safe place so that it can be taken out and read whenever necessary. Always forward it to the end user.
Registration:
The company and product names described in this manual are registered trademarks or the trademarks of their respective companies.

Effective December 2016
Specifications are subject to change without notice.

© 2005 Mitsubishi Electric Corporation

Safety Precautions (Read these precautions before use.)

This manual classifies the safety precautions into two categories:

⚠WARNING and ⚠CAUTION.

⚠WARNING	Indicates that incorrect handling may cause hazardous conditions, resulting in death or severe injury.
⚠CAUTION	Indicates that incorrect handling may cause hazardous conditions, resulting in medium or slight personal injury or physical damage.

Depending on the circumstances, procedures indicated by ⚠CAUTION may also cause severe injury.
It is important to follow all precautions for personal safety.

Associated Manuals

Manual name	Manual No.	Description
FX3S/FX3G/FX3GC/FX3U/FX3UC Series User's Manual - Analog Control Edition	JY997D16701 MODEL CODE: 09R619	Describes specifications for analog control and programming method for FX3S/FX3G/FX3GC/FX3U/FX3UC Series PLC.
FX3S/FX3G/FX3GC/FX3U/FX3UC Series Programming Manual - Basic & Applied Instruction Edition	JY997D16601 MODEL CODE: 09R517	Describes PLC programming for basic/applied instructions and devices.
FX3S Series User's Manual - Hardware Edition	JY997D48601 MODEL CODE: 09R535	Explains FX3S Series PLC specifications for I/O, wiring, installation, and maintenance.
FX3G Series User's Manual - Hardware Edition	JY997D31301 MODEL CODE: 09R521	Explains FX3G Series PLC specifications for I/O, wiring, installation, and maintenance.
FX3GC Series User's Manual - Hardware Edition	JY997D45401 MODEL CODE: 09R533	Explains FX3GC Series PLC specifications for I/O, wiring, installation, and maintenance.
FX3U Series User's Manual - Hardware Edition	JY997D16501 MODEL CODE: 09R516	Explains FX3U Series PLC specifications for I/O, wiring, installation, and maintenance.
FX3UC Series User's Manual - Hardware Edition	JY997D28701 MODEL CODE: 09R519	Explains FX3UC Series PLC specifications for I/O, wiring, installation, and maintenance.

How to obtain manuals
For product manuals or documents, consult with the Mitsubishi Electric dealer from who you purchased your product.

Applicable standards

FX3U-4DA-ADP units made in June, 2005 or later comply with the EC Directive (EMC Directive) and UL standards (UL, cUL). Further information can be found in the following manual.

→ **FX3S Series Hardware Manual (Manual No. JY997D48301)**
→ **FX3G Series Hardware Manual (Manual No. JY997D46001)**
→ **FX3GC Series Hardware Manual (Manual No. JY997D45201)**
→ **FX3U Series Hardware Manual (Manual No. JY997D50301)**
→ **FX3UC (D, DS, DSS) Series Hardware Manual (Manual No. JY997D50501)**
→ **FX3UC-32MT-LT-2 Hardware Manual (Manual No. JY997D31601)**

Regarding the standards that relate to the main unit, please refer to either the FX series product catalog or consult with your nearest Mitsubishi product provider.

Attention
This product is designed for use in industrial applications.

Caution for EC Directive

The analog special adapters have been found to be compliant to the European standards in the aforesaid manual and directive. However, for the very best performance from what are in fact delicate measuring and controlled output device Mitsubishi Electric would like to make the following points;
As analog devices are sensitive by nature, their use should be considered carefully. For users of proprietary cables (integral with sensors or actuators), these users should follow those manufacturers installation requirements.
Mitsubishi Electric recommend that shielded cables should be used. If NO other EMC protection is provided, then users may experience temporary loss or accuracy between ±10 % in very heavy industrial areas.
However, Mitsubishi Electric suggest that if adequate EMC precautions are followed for the users complete control system, users should expect accuracy as specified in this manual.

- Sensitive analog cable should not be laid in the same trunking or cable conduit as high voltage cabling. Where possible users should run analog cables separately.
- Good cable shielding should be used. When terminating the shield at Earth - ensure that no earth loops are accidentally created.
- When reading analog values, EMC accuracy can be improved out by averaging the readings. This can be achieved either through functions on the analog special adapters or through a users program.

1. Outline

The FX3U-4DA-ADP special adapter for analog output (hereinafter called 4DA-ADP) is a special adapter to add four analog output points.

1.1 Incorporated Items

Verify that the following product and items are included in the package:

Product	FX3U-4DA-ADP analog output special adapter
Accessories	User's manual (This manual)

1.2 External Dimensions, Part Names, and Terminal Layout

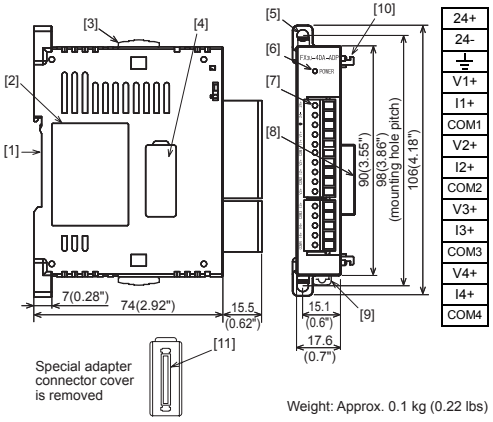

Weight: Approx. 0.1 kg (0.22 lbs)

[1] DIN rail mounting groove (DIN rail: DIN46277)
[2] Name plate
[3] Special adapter slide lock:
Used to connect additional special adapters onto the left side of this special adapter.
[4] Special adapter connector cover:
Remove this cover to connect additional special adapters to the left side.
[5] Direct mounting hole:2 holes of ϕ4.5 (0.18") (mounting screw: M4 screw)
Not used when connecting to FX3GC/FX3UC Series PLC.
[6] POWER LED (green):
Lit while 24 V DC power is supplied properly to terminals '24+' and '24-'.
[7] Terminal block (European type):
Connect the analog output voltage/current signal, and 24 V DC power supply.
[8] Special adapter connector:
Used to connect this special adapter to PLC main unit or special adapter.
[9] DIN rail mounting hook
[10] Special adapter fixing hook
[11] Special adapter connector:
Used to connect communication or analog special adapters to the left side of the 4DA-ADP.

2. Installation

For installation/uninstallation details, refer to the respective PLC User's manual Hardware Edition.

INSTALLATION PRECAUTIONS ⚠WARNING

- Make sure to cut off all phases of the power supply externally before attempting installation or wiring work.
Failure to do so may cause electric shock or damage to the product.

INSTALLATION PRECAUTIONS ⚠CAUTION

- Use the product within the generic environment specifications described in PLC main unit manual (Hardware Edition).
Never use the product in areas with excessive dust, oily smoke, conductive dusts, corrosive gas (salt air, Cl_2, H_2S, SO_2, or NO_2), flammable gas, vibration or impacts, or expose it to high temperature, condensation, or rain and wind.
If the product is used in such conditions, electric shock, fire, malfunctions, deterioration or damage may occur.
- When drilling screw holes or wiring, make sure cutting or wire debris does not enter the ventilation slits.
Failure to do so may cause fire, equipment failures or malfunctions.
- Do not touch the conductive parts of the product directly.
Doing so may cause device failures or malfunctions.
- Connect special adapter securely to their designated connectors.
Loose connections may cause malfunctions.

2.1 Connection to the PLC

This section describes the connection method to the PLC (FX3U Series PLC is used for the following example).
For installation method to other PLCs, refer to the respective PLC User's manual Hardware Edition.

Procedure

1) Turn off the power.
Disconnect all the cables connected to the PLC main unit and special adapter, and demount the main unit and special adapter mounted on DIN rail or mounted directly using screws.
2) Install an expansion board to the main unit.
For the expansion board installation procedure, refer to the following manual:
→ **FX3U Series User's Manual - Hardware Edition**
3) Remove the special adapter connector cover on the expansion board (fig.A).
When connecting this product to another special adapter, please replace the 'expansion board' in the above description with a 'special adapter' and perform the procedure as indicated.
4) Slide the special adapter slide lock (fig.B) of the main unit.
When connecting this product to another special adapter, please replace the 'main unit' in the above description with a 'special adapter' and perform the procedure as indicated. (Please replace the following procedures similarly.)
5) Connect the special adapter (fig.C) to the main unit as shown on the right.
6) Slide back the special adapter slide lock (fig.B) of the main unit to fix the special adapter (fig.C).

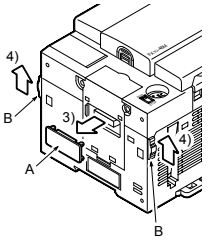

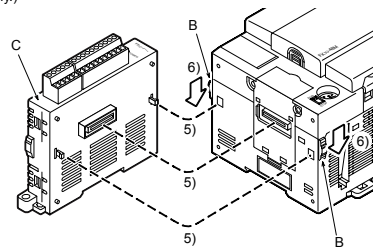

Connection precautions

Connect all the high-speed I/O special adapters before connecting other special adapters when they are used in combination.
Do not connect a high-speed I/O special adapter on the left side of any special adapters other than other high-speed I/O special adapters.

3. Wiring

WIRING PRECAUTIONS ⚠WARNING

- Make sure to cut off all phases of the power supply externally before attempting installation or wiring work.
  Failure to do so may cause electric shock or damage to the product.

WIRING PRECAUTIONS ⚠CAUTION

- When drilling screw holes or wiring, make sure cutting or wire debris does not enter the ventilation slits.
  Failure to do so may cause fire, equipment failures or malfunctions.
- Make sure to observe the following precautions in order to prevent any damage to the machinery or accidents due to abnormal data written to the PLC under the influence of noise:
  1) Do not bundle the power line or shield of the analog input/output cable together with or lay it close to the main circuit, high-voltage line, or load line.
  Otherwise, noise disturbance and/or surge induction are likely to take place. As a guideline, lay the control line at least 100mm (3.94") or more away from the main circuit, high-voltage line, or load line.
  2) Ground the shield of the analog input/output cable at one point on the signal receiving side. However, do not use common grounding with heavy electrical systems.
- Make sure to properly wire to the terminal block (European type) in accordance with the following precautions.
  Failure to do so may cause electric shock, equipment failures, a short-circuit, wire breakage, malfunctions, or damage to the product.
  - The disposal size of the cable end should follow the dimensions described in the manual.
  - Tightening torque should follow the specifications in the manual.
  - Twist the end of strand wire and make sure that there are no loose wires.
  - Do not solder-plate the electric wire ends.
  - Do not connect more than the specified number of wires or electric wires of unspecified size.
  - Affix the electric wires so that neither the terminal block nor the connected parts are directly stressed.
- Make sure to properly wire the terminal block in accordance with the following precautions.
  Failure to do so may cause electric shock, equipment failures, a short-circuit, wire breakage, malfunctions, or damage to the product.
  - The disposal size of the cable end should follow the dimensions described in the manual of the PLC main unit.
  - Tightening torque should follow the specifications in the manual of the PLC main unit.

3.1 Applicable cable and terminal tightening torque

3.1.1 Terminal block (European type)

1) Wire size
Wiring to analog device should use 20-22 AWG wire.

2) Applicable cable

Type	Wire size
Single-wire	0.3 mm² to 0.5 mm² (AWG22 to 20)
2-wire	2 pieces of 0.3 mm² (AWG22)

3) Termination of cable end
Strip the coating of strand wire and twist the cable core before connecting it, or strip the coating of single wire before connecting it.
An alternative connection is to use a ferrule with insulating sleeve.
<Reference>

Manufacturer	Model	Caulking tool
Phoenix Contact Co., Ltd.	AI 0.5-8WH	CRIMPFOX 6*1 (or CRIMPFOX 6T-F*2)

*1 Old model name: CRIMPFOX ZA 3

*2 Old model name: CRIMPFOX UD 6

- Strand wire/single wire

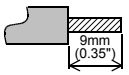

- Stick terminal with insulating sleeve

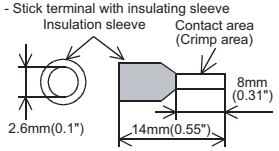

When using a stick terminal with insulating sleeve, choose a wire with proper cable sheath referring to the above outside dimensions, or otherwise, the wire cannot be inserted easily.
The tightening torque must be 0.22 to 0.25 N•m. Do not tighten terminal screws with a torque outside the above-mentioned range. Failure to do so may cause equipment failures or malfunctions.

3.2 Power Supply Wiring

For the power supply wiring, refer to the following manual.
→ **FX3S/FX3G/FX3GC/FX3U/FX3UC Series User's Manual - Analog Control Edition**

3.3 Wiring of Analog Output

→ **For the terminal configuration, refer to Section 1.2**

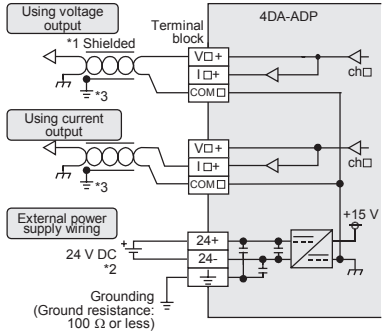

V□+, I□+, ch □: □represents the channel number.

*1 Use 2-core shielded twisted pair cable for the analog output lines, and separate the analog output lines from other power lines or inductive lines.

*2 24 V DC service power supply of the FX3S/FX3G/FX3U Series PLC can also be used.

*3 Ground the shielded wire at one point on the signal receiving side.

3.4 Grounding

Grounding should be performed as stated below.

- The grounding resistance should be 100 Ω or less.
- Independent grounding should be performed for best results.
  When independent grounding is not performed, perform "shared grounding" of the following figure.
  For details, refer to the respective PLC User's manual Hardware Edition.

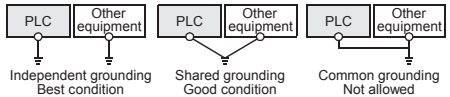

- The grounding wire size should be AWG 22-20 (0.3-0.5 mm²).
- The grounding point should be close to the PLC, and all grounding wire should be as short as possible.

4. Specifications

STARTUP AND MAINTENANCE PRECAUTIONS ⚠CAUTION

- Do not disassemble or modify the PLC.
  Doing so may cause fire, equipment failures, or malfunctions.
  * For repair, contact your local Mitsubishi Electric representative.
- Do not drop the product or exert strong impact to it.
  Doing so may cause damage.

DISPOSAL PRECAUTIONS ⚠CAUTION

- Please contact a certified electronic waste disposal company for the environmentally safe recycling and disposal of your device.

TRANSPORTATION AND STORAGE PRECAUTIONS ⚠CAUTION

- The product is a precision instrument. During transportation, avoid impacts larger than those specified in the general specifications by using dedicated packaging boxes and shock-absorbing palettes.
  Failure to do so may cause failures in the product.
  After transportation, verify operation of the product and check for damage of the mounting part, etc.

4.1 Applicable PLC

Model name	Applicability
FX3S Series PLC	Ver. 1.00 or later (from first production)
FX3G Series PLC	Ver. 1.00 or later (from first production)
FX3GC Series PLC	Ver. 1.40 or later (from first production)
FX3U Series PLC	Ver. 2.20 or later (from first production)
FX3UC Series PLC	Ver. 1.20 or later (from the production manufactured in May, 2004 with SER No. 45****)

The version number can be checked by monitoring D8001/D8101 as the last three digits indicate it.

4.2 General Specifications

Items other than the following are equivalent to the those of the PLC main unit.
For general specifications, refer to the respective PLC User's manual Hardware Edition.

Item	Specification	
Dielectric withstand voltage	500 V AC for one minute	Between all terminals and ground terminal of PLC main unit
Insulation resistance	5 MΩ or higher by 500 V DC insulation resistance tester	

4.3 Power Supply Specifications

Item	Specification
D/A conversion circuit driving power	24 V DC +20 %/-15 %, 150 mA for 24 V DC Connect a 24 V DC power supply to the terminal block.
Interface driving power	5 V DC, 15 mA 5 V DC power is supplied from the internal power supply of main unit.

4.4 Performance Specifications

Item	Description	
	Voltage output	Current output
Analog output range	0 to 10 V DC (External load: 5 kΩ to 1 MΩ)	4 to 20 mA DC (External load: 500 Ω or less)
Digital input	12 bits, binary	
Resolution	2.5 mV(10 V/4000)	4 μA(16 mA/4000)
Total accuracy	• ±0.5 % (±50 mV) for full scale of 10 V (when ambient temperature is 25 °C±5 °C) • ±1.0 % (±100 mV) for full scale of 10 V (when ambient temperature is 0 °C to 55 °C) If the external load resistance (Rs) is less than 5 kΩ, the value calculated from the following formula will be added: (Addition will be 100 mV per %.) $\left[\frac{47\times100}{Rs+47}-0.9\right]$ % for full scale of 10 V	• ±0.5 % (±80 μA) for full scale of 16 mA (when ambient temperature is 25 °C±5 °C) • ±1.0 % (±160 μA) for full scale of 16 mA (when ambient temperature is 0 °C to 55 °C)
D/A conversion time	• FX3U/FX3UC Series PLC: 200 μs (The data will be updated at every scan time of the PLC.) • FX3S/FX3G/FX3GC Series PLC: 250 μs (The data will be updated at every scan time of the PLC.)	
Output characteristics	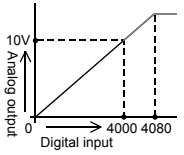	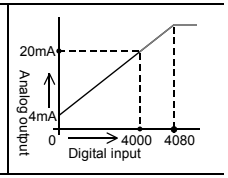
Insulation method	• The photocoupler is adopted to insulate the analog output area from the PLC. • The DC/DC converter is adopted to insulate the power supply line from the analog output area. • Channels are not insulated from each other.	
Occupied points	0 point (This number is not related to the maximum number of input/output points of the PLC.)	

5. 「电器电子产品有害物质限制使用标识要求」的表示方式

Note: This symbol mark is for China only.

含有有害6物质的名称，含有量，含有部品
本产品中所含有的有害6物质的名称，含有量，含有部品如下表所示。

产品中有害物质的名称及含量

部件名称		有害物质					
		铅 (Pb)	汞 (Hg)	镉 (Cd)	六价铬 (Cr(VI))	多溴联苯 (PBB)	多溴二苯醚 (PBDE)
可编程控制器	外壳	○	○	○	○	○	○
	印刷基板	×	○	○	○	○	○

本表格依据SJ/T 11364的规定编制。

○:表示该有害物质在该部件所有均质材料中的含量均在GB/T 26572规定的限量要求以下。
×:表示该有害物质至少在该部件的某一均质材料中的含量超出GB/T 26572规定的限量要求。

This manual confers no industrial property rights or any rights of any other kind, nor does it confer any patent licenses. Mitsubishi Electric Corporation cannot be held responsible for any problems involving industrial property rights which may occur as a result of using the contents noted in this manual.

Warranty

Exclusion of loss in opportunity and secondary loss from warranty liability
Regardless of the gratis warranty term, Mitsubishi shall not be liable for compensation to:
(1) Damages caused by any cause found not to be the responsibility of Mitsubishi.
(2) Loss in opportunity, lost profits incurred to the user by Failures of Mitsubishi products.
(3) Special damages and secondary damages whether foreseeable or not, compensation for accidents, and compensation for damages to products other than Mitsubishi products.
(4) Replacement by the user, maintenance of on-site equipment, start-up test run and other tasks.

⚠ For safe use

- This product has been manufactured as a general-purpose part for general industries, and has not been designed or manufactured to be incorporated in a device or system used in purposes related to human life.
- Before using the product for special purposes such as nuclear power, electric power, aerospace, medicine or passenger movement vehicles, consult with Mitsubishi Electric.
- This product has been manufactured under strict quality control. However when installing the product where major accidents or losses could occur if the product fails, install appropriate backup or failsafe functions in the system.

MITSUBISHI ELECTRIC CORPORATION
HEAD OFFICE : TOKYO BUILDING, 2-7-3 MARUNOUCHI, CHIYODA-KU, TOKYO 100-8310, JAPAN

JY997D14001L **Side B**

MITSUBISHI ELECTRIC

Side A **JAPANESE**

Side B **ENGLISH**

Programmable Controller
MELSEC-F

FX3U-4DA-ADP
USER'S MANUAL

Manual Number	JY997D14001
Revision	L
Date	December 2016

This manual describes the part names, dimensions, mounting, and specifications of the product. Before use, read this manual and the manuals of all relevant products fully to acquire proficiency in handling and operating the product. Make sure to learn all the product information, safety information, and precautions.
Store this manual in a safe place so that it can be taken out and read whenever necessary. Always forward it to the end user.
Registration:
The company and product names described in this manual are registered trademarks or the trademarks of their respective companies.

Effective December 2016
Specifications are subject to change without notice.
© 2005 Mitsubishi Electric Corporation

Safety Precautions (Read these precautions before use.)

This manual classifies the safety precautions into two categories:

⚠WARNING and ⚠CAUTION.

⚠WARNING	Indicates that incorrect handling may cause hazardous conditions, resulting in death or severe injury.
⚠CAUTION	Indicates that incorrect handling may cause hazardous conditions, resulting in medium or slight personal injury or physical damage.

Depending on the circumstances, procedures indicated by ⚠CAUTION may also cause severe injury.
It is important to follow all precautions for personal safety.

Associated Manuals

Manual name	Manual No.	Description
FX3S/FX3G/FX3GC/FX3U/FX3UC Series User's Manual - Analog Control Edition	JY997D16701 MODEL CODE: 09R619	Describes specifications for analog control and programming method for FX3S/FX3G/FX3GC/FX3U/FX3UC Series PLC.
FX3S/FX3G/FX3GC/FX3U/FX3UC Series Programming Manual - Basic & Applied Instruction Edition	JY997D16601 MODEL CODE: 09R517	Describes PLC programming for basic/applied instructions and devices.
FX3S Series User's Manual - Hardware Edition	JY997D48601 MODEL CODE: 09R535	Explains FX3S Series PLC specifications for I/O, wiring, installation, and maintenance.
FX3G Series User's Manual - Hardware Edition	JY997D31301 MODEL CODE: 09R521	Explains FX3G Series PLC specifications for I/O, wiring, installation, and maintenance.
FX3GC Series User's Manual - Hardware Edition	JY997D45401 MODEL CODE: 09R533	Explains FX3GC Series PLC specifications for I/O, wiring, installation, and maintenance.
FX3U Series User's Manual - Hardware Edition	JY997D16501 MODEL CODE: 09R516	Explains FX3U Series PLC specifications for I/O, wiring, installation, and maintenance.
FX3UC Series User's Manual - Hardware Edition	JY997D28701 MODEL CODE: 09R519	Explains FX3UC Series PLC specifications for I/O, wiring, installation, and maintenance.

How to obtain manuals
For product manuals or documents, consult with the Mitsubishi Electric dealer from who you purchased your product.

Applicable standards

FX3U-4DA-ADP units made in June, 2005 or later comply with the EC Directive (EMC Directive) and UL standards (UL, cUL). Further information can be found in the following manual.

→ **FX3S Series Hardware Manual (Manual No. JY997D48301)**
→ **FX3G Series Hardware Manual (Manual No. JY997D46001)**
→ **FX3GC Series Hardware Manual (Manual No. JY997D45201)**
→ **FX3U Series Hardware Manual (Manual No. JY997D50301)**
→ **FX3UC (D, DS, DSS) Series Hardware Manual (Manual No. JY997D50501)**
→ **FX3UC-32MT-LT-2 Hardware Manual (Manual No. JY997D31601)**

Regarding the standards that relate to the main unit, please refer to either the FX series product catalog or consult with your nearest Mitsubishi product provider.

Attention
This product is designed for use in industrial applications.

Caution for EC Directive

The analog special adapters have been found to be compliant to the European standards in the aforesaid manual and directive. However, for the very best performance from what are in fact delicate measuring and controlled output device Mitsubishi Electric would like to make the following points;
As analog devices are sensitive by nature, their use should be considered carefully. For users of proprietary cables (integral with sensors or actuators), these users should follow those manufacturers installation requirements.
Mitsubishi Electric recommend that shielded cables should be used. If NO other EMC protection is provided, then users may experience temporary loss or accuracy between ±10 % in very heavy industrial areas.
However, Mitsubishi Electric suggest that if adequate EMC precautions are followed for the users complete control system, users should expect accuracy as specified in this manual.

- Sensitive analog cable should not be laid in the same trunking or cable conduit as high voltage cabling. Where possible users should run analog cables separately.
- Good cable shielding should be used. When terminating the shield at Earth - ensure that no earth loops are accidentally created.
- When reading analog values, EMC accuracy can be improved out by averaging the readings. This can be achieved either through functions on the analog special adapters or through a users program.

1. Outline

The FX3U-4DA-ADP special adapter for analog output (hereinafter called 4DA-ADP) is a special adapter to add four analog output points.

1.1 Incorporated Items

Verify that the following product and items are included in the package:

Product	FX3U-4DA-ADP analog output special adapter
Accessories	User's manual (This manual)

1.2 External Dimensions, Part Names, and Terminal Layout

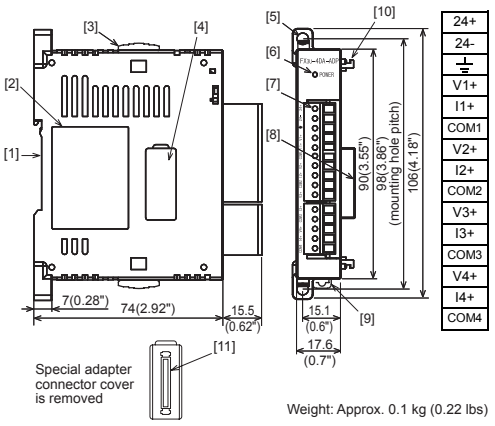

Weight: Approx. 0.1 kg (0.22 lbs)

[1] DIN rail mounting groove (DIN rail: DIN46277)
[2] Name plate
[3] Special adapter slide lock:
Used to connect additional special adapters onto the left side of this special adapter.
[4] Special adapter connector cover:
Remove this cover to connect additional special adapters to the left side.
[5] Direct mounting hole:2 holes of ϕ4.5 (0.18") (mounting screw: M4 screw)
Not used when connecting to FX3GC/FX3UC Series PLC.
[6] POWER LED (green):
Lit while 24 V DC power is supplied properly to terminals '24+' and '24-'.
[7] Terminal block (European type):
Connect the analog output voltage/current signal, and 24 V DC power supply.
[8] Special adapter connector:
Used to connect this special adapter to PLC main unit or special adapter.
[9] DIN rail mounting hook
[10] Special adapter fixing hook
[11] Special adapter connector:
Used to connect communication or analog special adapters to the left side of the 4DA-ADP.

2. Installation

For installation/uninstallation details, refer to the respective PLC User's manual Hardware Edition.

INSTALLATION PRECAUTIONS ⚠WARNING

- Make sure to cut off all phases of the power supply externally before attempting installation or wiring work.
Failure to do so may cause electric shock or damage to the product.

INSTALLATION PRECAUTIONS ⚠CAUTION

- Use the product within the generic environment specifications described in PLC main unit manual (Hardware Edition).
Never use the product in areas with excessive dust, oily smoke, conductive dusts, corrosive gas (salt air, Cl_2, H_2S, SO_2, or NO_2), flammable gas, vibration or impacts, or expose it to high temperature, condensation, or rain and wind.
If the product is used in such conditions, electric shock, fire, malfunctions, deterioration or damage may occur.
- When drilling screw holes or wiring, make sure cutting or wire debris does not enter the ventilation slits.
Failure to do so may cause fire, equipment failures or malfunctions.
- Do not touch the conductive parts of the product directly.
Doing so may cause device failures or malfunctions.
- Connect special adapter securely to their designated connectors.
Loose connections may cause malfunctions.

2.1 Connection to the PLC

This section describes the connection method to the PLC (FX3U Series PLC is used for the following example).
For installation method to other PLCs, refer to the respective PLC User's manual Hardware Edition.

Procedure

1) Turn off the power.
Disconnect all the cables connected to the PLC main unit and special adapter, and demount the main unit and special adapter mounted on DIN rail or mounted directly using screws.
2) Install an expansion board to the main unit.
For the expansion board installation procedure, refer to the following manual:
→ **FX3U Series User's Manual - Hardware Edition**
3) Remove the special adapter connector cover on the expansion board (fig.A).
When connecting this product to another special adapter, please replace the 'expansion board' in the above description with a 'special adapter' and perform the procedure as indicated.
4) Slide the special adapter slide lock (fig.B) of the main unit.
When connecting this product to another special adapter, please replace the 'main unit' in the above description with a 'special adapter' and perform the procedure as indicated. (Please replace the following procedures similarly.)
5) Connect the special adapter (fig.C) to the main unit as shown on the right.
6) Slide back the special adapter slide lock (fig.B) of the main unit to fix the special adapter (fig.C).

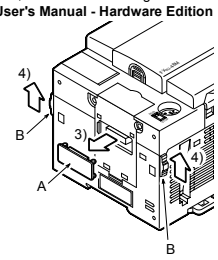

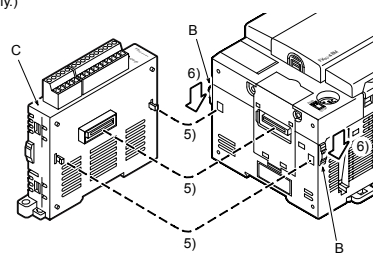

Connection precautions

Connect all the high-speed I/O special adapters before connecting other special adapters when they are used in combination.
Do not connect a high-speed I/O special adapter on the left side of any special adapters other than other high-speed I/O special adapters.

3. Wiring

WIRING PRECAUTIONS ⚠WARNING

- Make sure to cut off all phases of the power supply externally before attempting installation or wiring work.
Failure to do so may cause electric shock or damage to the product.

WIRING PRECAUTIONS ⚠CAUTION

- When drilling screw holes or wiring, make sure cutting or wire debris does not enter the ventilation slits.
Failure to do so may cause fire, equipment failures or malfunctions.
- Make sure to observe the following precautions in order to prevent any damage to the machinery or accidents due to abnormal data written to the PLC under the influence of noise:
1) Do not bundle the power line or shield of the analog input/output cable together with or lay it close to the main circuit, high-voltage line, or load line.
Otherwise, noise disturbance and/or surge induction are likely to take place. As a guideline, lay the control line at least 100mm (3.94") or more away from the main circuit, high-voltage line, or load line.
2) Ground the shield of the analog input/output cable at one point on the signal receiving side. However, do not use common grounding with heavy electrical systems.
- Make sure to properly wire to the terminal block (European type) in accordance with the following precautions.
Failure to do so may cause electric shock, equipment failures, a short-circuit, wire breakage, malfunctions, or damage to the product.
  - The disposal size of the cable end should follow the dimensions described in the manual.
  - Tightening torque should follow the specifications in the manual.
  - Twist the end of strand wire and make sure that there are no loose wires.
  - Do not solder-plate the electric wire ends.
  - Do not connect more than the specified number of wires or electric wires of unspecified size.
  - Affix the electric wires so that neither the terminal block nor the connected parts are directly stressed.
- Make sure to properly wire the terminal block in accordance with the following precautions.
Failure to do so may cause electric shock, equipment failures, a short-circuit, wire breakage, malfunctions, or damage to the product.
  - The disposal size of the cable end should follow the dimensions described in the manual of the PLC main unit.
  - Tightening torque should follow the specifications in the manual of the PLC main unit.

3.1 Applicable cable and terminal tightening torque

3.1.1 Terminal block (European type)

1) Wire size
Wiring to analog device should use 20-22 AWG wire.
2) Applicable cable

Type	Wire size
Single-wire	0.3 mm² to 0.5 mm² (AWG22 to 20)
2-wire	2 pieces of 0.3 mm² (AWG22)

3) Termination of cable end
Strip the coating of strand wire and twist the cable core before connecting it, or strip the coating of single wire before connecting it.
An alternative connection is to use a ferrule with insulating sleeve.
<Reference>

Manufacturer	Model	Caulking tool
Phoenix Contact Co., Ltd.	AI 0.5-8WH	CRIMPFOX 6*1 (or CRIMPFOX 6T-F*2)

*1 Old model name: CRIMPFOX ZA 3
*2 Old model name: CRIMPFOX UD 6

- Strand wire/single wire

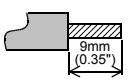

- Stick terminal with insulating sleeve

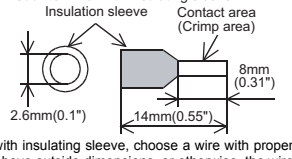

When using a stick terminal with insulating sleeve, choose a wire with proper cable sheath referring to the above outside dimensions, or otherwise, the wire cannot be inserted easily.
The tightening torque must be 0.22 to 0.25 N•m. Do not tighten terminal screws with a torque outside the above-mentioned range. Failure to do so may cause equipment failures or malfunctions.

3.2 Power Supply Wiring

For the power supply wiring, refer to the following manual.
→ **FX3S/FX3G/FX3GC/FX3U/FX3UC Series User's Manual - Analog Control Edition**

3.3 Wiring of Analog Output

→ **For the terminal configuration, refer to Section 1.2**

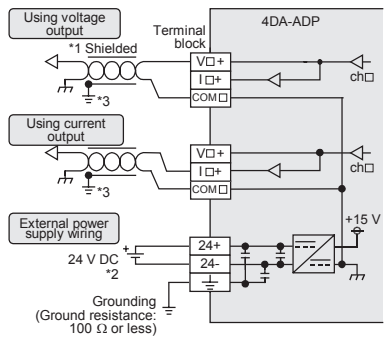

V□+, I□+, ch □: □represents the channel number.

*1 Use 2-core shielded twisted pair cable for the analog output lines, and separate the analog output lines from other power lines or inductive lines.
*2 24 V DC service power supply of the FX3S/FX3G/FX3U Series PLC can also be used.
*3 Ground the shielded wire at one point on the signal receiving side.

3.4 Grounding

Grounding should be performed as stated below.

- The grounding resistance should be 100 Ω or less.
- Independent grounding should be performed for best results.
When independent grounding is not performed, perform "shared grounding" of the following figure.
For details, refer to the respective PLC User's manual Hardware Edition.

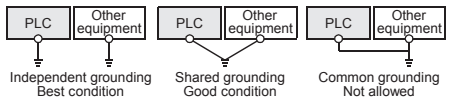

- The grounding wire size should be AWG 22-20 (0.3-0.5 mm²).
- The grounding point should be close to the PLC, and all grounding wire should be as short as possible.

4. Specifications

STARTUP AND MAINTENANCE PRECAUTIONS ⚠CAUTION

- Do not disassemble or modify the PLC.
Doing so may cause fire, equipment failures, or malfunctions.
* For repair, contact your local Mitsubishi Electric representative.
- Do not drop the product or exert strong impact to it.
Doing so may cause damage.

DISPOSAL PRECAUTIONS ⚠CAUTION

- Please contact a certified electronic waste disposal company for the environmentally safe recycling and disposal of your device.

TRANSPORTATION AND STORAGE PRECAUTIONS ⚠CAUTION

- The product is a precision instrument. During transportation, avoid impacts larger than those specified in the general specifications by using dedicated packaging boxes and shock-absorbing palettes.
Failure to do so may cause failures in the product.
After transportation, verify operation of the product and check for damage of the mounting part, etc.

4.1 Applicable PLC

Model name	Applicability
FX3S Series PLC	Ver. 1.00 or later (from first production)
FX3G Series PLC	Ver. 1.00 or later (from first production)
FX3GC Series PLC	Ver. 1.40 or later (from first production)
FX3U Series PLC	Ver. 2.20 or later (from first production)
FX3UC Series PLC	Ver. 1.20 or later (from the production manufactured in May, 2004 with SER No. 45****)

The version number can be checked by monitoring D8001/D8101 as the last three digits indicate it.

4.2 General Specifications

Items other than the following are equivalent to the those of the PLC main unit.
For general specifications, refer to the respective PLC User's manual Hardware Edition.

Item	Specification	
Dielectric withstand voltage	500 V AC for one minute	Between all terminals and ground terminal of PLC main unit
Insulation resistance	5 MΩ or higher by 500 V DC insulation resistance tester	

4.3 Power Supply Specifications

Item	Specification
D/A conversion circuit driving power	24 V DC +20 %/-15 %, 150 mA for 24 V DC Connect a 24 V DC power supply to the terminal block.
Interface driving power	5 V DC, 15 mA 5 V DC power is supplied from the internal power supply of main unit.

4.4 Performance Specifications

Item	Description	
	Voltage output	Current output
Analog output range	0 to 10 V DC (External load: 5 kΩ to 1 MΩ)	4 to 20 mA DC (External load: 500 Ω or less)
Digital input	12 bits, binary	
Resolution	2.5 mV(10 V/4000)	4 μA(16 mA/4000)
Total accuracy	• ±0.5 % (±50 mV) for full scale of 10 V (when ambient temperature is 25 °C±5 °C) • ±1.0 % (±100 mV) for full scale of 10 V (when ambient temperature is 0 °C to 55 °C) If the external load resistance (Rs) is less than 5 kΩ, the value calculated from the following formula will be added: (Addition will be 100 mV per %.) $\left[\frac{47\times100}{Rs+47} - 0.9\right]$ % for full scale of 10 V	• ±0.5 % (±80 μA) for full scale of 16 mA (when ambient temperature is 25 °C±5 °C) • ±1.0 % (±160 μA) for full scale of 16 mA (when ambient temperature is 0 °C to 55 °C)
D/A conversion time	• FX3U/FX3UC Series PLC: 200 μs (The data will be updated at every scan time of the PLC.) • FX3S/FX3G/FX3GC Series PLC: 250 μs (The data will be updated at every scan time of the PLC.)	
Output characteristics	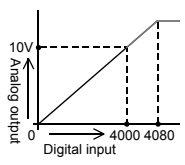	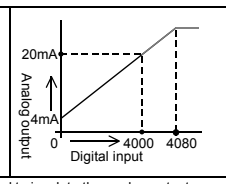
Insulation method	• The photocoupler is adopted to insulate the analog output area from the PLC. • The DC/DC converter is adopted to insulate the power supply line from the analog output area. • Channels are not insulated from each other.	
Occupied points	0 point (This number is not related to the maximum number of input/output points of the PLC.)	

5. 「电器电子产品有害物质限制使用标识要求」的表示方式

Note: This symbol mark is for China only.

含有有害6物质的名称，含有量，含有部品
本产品中所含有的有害6物质的名称，含有量，含有部品如下表所示。

产品中有害物质的名称及含量

部件名称		有害物质					
		铅 (Pb)	汞 (Hg)	镉 (Cd)	六价铬 (Cr (VI))	多溴联苯 (PBB)	多溴二苯醚 (PBDE)
可编程控制器	外壳	○	○	○	○	○	○
	印刷基板	×	○	○	○	○	○

本表格依据SJ/T 11364的规定编制。

○:表示该有害物质在该部件所有均质材料中的含量均在GB/T 26572规定的限量要求以下。
×:表示该有害物质至少在该部件的某一均质材料中的含量超出GB/T 26572规定的限量要求。

This manual confers no industrial property rights or any rights of any other kind, nor does it confer any patent licenses. Mitsubishi Electric Corporation cannot be held responsible for any problems involving industrial property rights which may occur as a result of using the contents noted in this manual.

Warranty
Exclusion of loss in opportunity and secondary loss from warranty liability
Regardless of the gratis warranty term, Mitsubishi shall not be liable for compensation to:
(1) Damages caused by any cause found not to be the responsibility of Mitsubishi.
(2) Loss in opportunity, lost profits incurred to the user by Failures of Mitsubishi products.
(3) Special damages and secondary damages whether foreseeable or not, compensation for accidents, and compensation for damages to products other than Mitsubishi products.
(4) Replacement by the user, maintenance of on-site equipment, start-up test run and other tasks.

⚠ For safe use

- This product has been manufactured as a general-purpose part for general industries, and has not been designed or manufactured to be incorporated in a device or system used in purposes related to human life.
- Before using the product for special purposes such as nuclear power, electric power, aerospace, medicine or passenger movement vehicles, consult with Mitsubishi Electric.
- This product has been manufactured under strict quality control. However when installing the product where major accidents or losses could occur if the product fails, install appropriate backup or failsafe functions in the system.

MITSUBISHI ELECTRIC CORPORATION
HEAD OFFICE : TOKYO BUILDING, 2-7-3 MARUNOUCHI, CHIYODA-KU, TOKYO 100-8310, JAPAN