stay connected

RM-21/24V AC/DC KL.BZ.N.EN OUTPUT RELAY

IN: 24 VAC/DC - OUT: 250 VAC/DC / 5 A

2 relays; each 1 NO/NC contact
5 A
24 V DC

Link to Product

Illustration



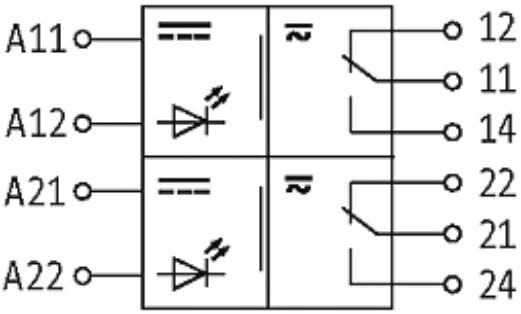

The information in this brochure has been compiled with the utmost care.
Liability for the correctness completeness and topicality of the information is restricted to gross negligence. Version: 05/16

MURR ELEKTRONIK
stay connected

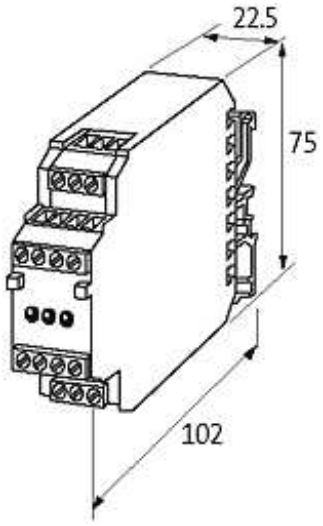

Product may differ from Image

Input	
Connection voltage - current	24 VAC/DC (19.2...30 VAC/DC) - 10mA
LED display	LED (red)
Utilization category	
AC-1	8 A (24/110/230 V AC)
AC-15	3 A (24/110/230 V AC)
DC-13	1.5 A (24 V DC); 0.3 A (110 V DC); 0.15 A (230 V DC)
General data	
Mech./ elect. life	20.000.000 switching cycles/load dependent
Test isolation voltage	4 kV
Mounting method	DIN-rail mountable TH35 or G32 (EN 60715)
Temperature range	-20...+50 °C
Dimensions H × W × D	75×22.5×102 mm
Output	
Switching voltage	max. 250 V AC/DC
Switching current per output	max. 8 A
Min. load current	100 mA
Power rating (voltage dependent)	max. 1250 VA/240 W
Switching frequency	max. 0.1 Hz (with load)
Contact material	Ag Sn O2
Energize/release/contact bounce time	10/10/2 ms
Commercial data	
country of origin	CZ
customs tariff number	85364900
minimum order quantity	1

The information in this brochure has been compiled with the utmost care.
Liability for the correctness completeness and topicality of the information is restricted to gross negligence. Version: 05/16