MURR ELEKTRONIK
stay connected

# MCS POWER SUPPLY 1-PHASE,

IN: 185-265VAC OUT: 24-28V/5ADC

INPUT: 185...265 V AC
OUTPUT: 24...28 V DC
Current: 5 A

## Link to Product

### Illustration




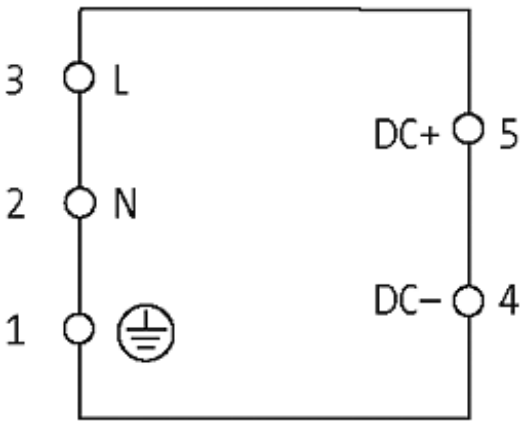


The information in this brochure has been compiled with the utmost care.
Liability for the correctness completeness and topicality of the information is restricted to gross negligence. Version: 05/16

MURR ELEKTRONIK
stay connected

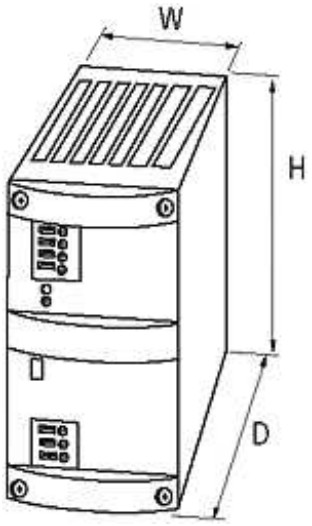


Product may differ from Image

## Approvals

## Input

| | |
|---|---|
| Input voltage | 185...265 V AC |
| Input current | 1.1 A (230 V AC) |
| Inrush current after 1 ms | max. 35 A |
| Primary fusing external | max. 10 A |
| Frequency | 50...60 Hz |

## General data

| | |
|---|---|
| Standards | EN 60950-1, EN 61204-3, EN 55022 B |
| Mounting method | DIN-rail mountable TH35 (EN 60715) |
| Efficiency | 84 % |
| Relative humidity | 5...95 %, no condensation |
| Dimensions H × W × D | 115×54×125 mm |
| Temperature range | 0...+60 °C (storage temperature -25...+85 °C) |

## Output

| | |
|---|---|
| Output voltage | 24 V DC (SELV), ±1 %; 24...28 V adjustable |
| Output current | 5 A (+60 °C); 6 A (+40 °C) |
| Mains failure bridging time | min. 20 ms (230 V AC) |
| Ripple | max. 20 mVrms |
| Spikes | max. 80 mV p-p |
| Unit protection | short-circuit and overload protected |
| LED display | LED (green) for output voltage |
| Selectable switch-off mode | front sided plug link (automatic re-start or definite shut-off) |

The information in this brochure has been compiled with the utmost care.
Liability for the correctness completeness and topicality of the information is restricted to gross negligence. Version: 05/16

| | |
|---|---|
| Parallel usage/serial usage | yes/yes |

| **Commercial data** | |
|---|---|
| country of origin | CZ |
| customs tariff number | 85044090 |
| minimum order quantity | 1 |

The information in this brochure has been compiled with the utmost care.
Liability for the correctness completeness and topicality of the information is restricted to gross negligence. Version: 05/16