MURR ELEKTRONIK
stay connected

MCS POWER SUPPLY 1-PHASE,

IN: 185-265VAC OUT: 24-28V/5ADC

INPUT: 185...265 V AC
OUTPUT: 24...28 V DC
Current: 5 A

Link to Product

Illustration



Product may differ from Image

Approvals

Input

Input voltage	185...265 V AC
Input current	1.1 A (230 V AC)
Inrush current after 1 ms	max. 35 A
Primary fusing external	max. 10 A
Frequency	50...60 Hz

Output

Output voltage	24 V DC (SELV), ±1%; 24...28 V adjustable
Output current	5 A (+60 °C); 6 A (+40 °C)
Mains failure bridging time	min. 20 ms (230 V AC)
Ripple	max. 20 mV eff/rms
Spikes	max. 80 mV ss/pp
Unit protection	short-circuit and overload protected
LED display	LED (green) for output voltage
Selectable switch-off mode	front sided plug link (automatic re-start or definite shut-off)
Parallel usage/serial usage	yes/yes

General data

Standards	EN 60950-1, EN 61204-3, EN 55022 B
Mounting method	DIN-rail mountable TH35 (EN 60715)

The information in this brochure has been compiled with the utmost care.
Liability for the correctness completeness and topicality of the information is restricted to gross negligence. Version: 11/20

Efficiency	84%
Relative humidity	5...95%, no condensation
Dimensions H×W×D	115×54×125 mm
Temperature range	0...+60 °C (storage temperature -25...+85 °C)

Commercial data

country of origin	CZ
customs tariff number	85044090
EAN	4048879080545
eClass	27049002
Packaging unit	1

Sketch

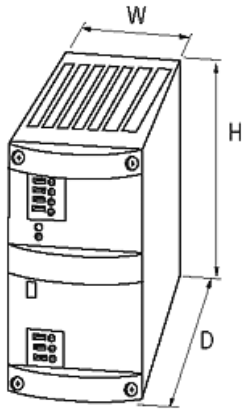

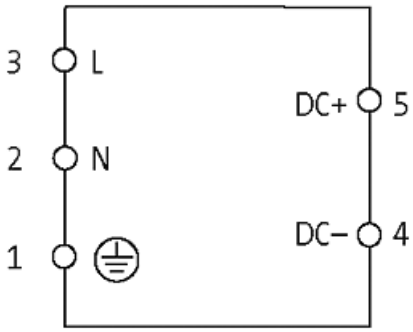

Product may differ from Image

The information in this brochure has been compiled with the utmost care.
Liability for the correctness completeness and topicality of the information is restricted to gross negligence. Version: 11/20