OMRON®

High-Precision Optical Switch

D5F

Opto-Mechanical Switch Achieves 1-µm Operating Position Repeatability



- 4-way switch
- A knife-edge mechanism in the optical system provides greater precision for a more stable output
- Reduced size and weight are 34 mm (1.34 in) at operating section and 60 g (2.12 oz) total
- Actuators have wear-resistant ceramic parts
- PNP and NPN output types available

Ordering Information

■ LIMIT SWITCHES

Output configuration	Contact form	Output indicator	Cable length	**Part number**
PNP open collector (+ common)	SPST-NC	ON when no target present	1 m	**D5F-2B10**
			3 m	**D5F-2B30**
NPN open collector (– common)	SPST-NO	ON when target present	1 m	**D5F-3C10**
			3 m	**D5F-3C30**

Construction

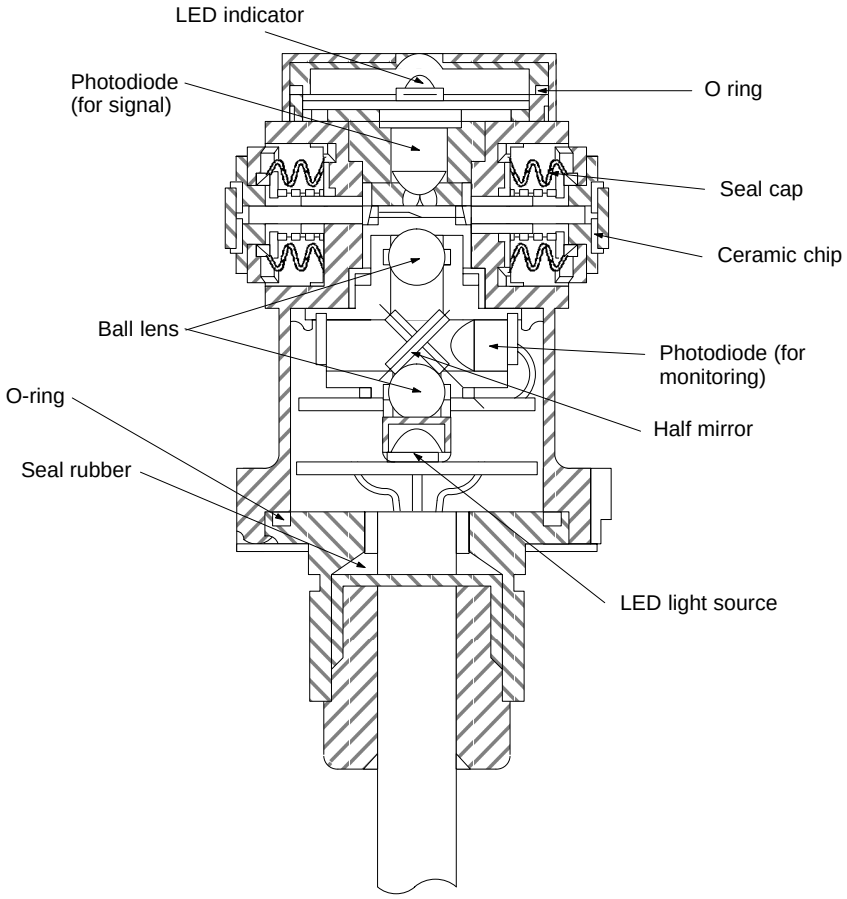

Specifications

■ RATINGS

Power supply voltage	12/24 VDC±10%
Output current	100 mA max.
Power consumption	30 mA max.
Leakage current	0.15 mA max.
Residual voltage	2 V max.

■ CHARACTERISTICS

Operating speed		1 μm/s to 50 cm/s (39 x 10^{-6} in to 19.68 in/s)
Max. operating frequency		60 operations/minute
Insulation resistance		100 MΩ min. (at 500 VDC) between each terminal and ground
Dielectric strength		1,100 VAC between each terminal and ground
Repeat accuracy		1 μm max. (39 x 10^{-6} in)
Vibration resistance	Malfunction	10 to 500 Hz, 0.65-mm double amplitude
Shock resistance	Malfunction	300 m/s^2 min. (approx. 30G min.) 984 ft/s^2
Life expectancy	Mechanical	5,000,000 operations min.
	Electrical	5,000,000 operations min.
Deflection		10 μm max. after 1,000,000 operations (390 x 10^{-6} in)
Temperature coefficient		±50 x 10^{-6}/°C max.
Ambient temperature	Operating	–10°C to 60°C (14°F to 140°F) with no icing
Ambient humidity	Operating	30% to 95%
Enclosure rating		IEC IP67

■ OPERATING CHARACTERISTICS

OF max.	2.5 N (250 gf) (0.56 lbf)
RF min.	1.0 N (100 gf) (0.22 lbf)
PT max.	0.5 mm (0.22 in)
MD max.	20 μm (0.79 x 10^{-3} in)
TT min.	2.2 mm (0.087 in)

Engineering Data

■ PERMISSIBLE OPERATING TEMPERATURE RANGE

The permissible operating temperature range varies with the current flow as follows:

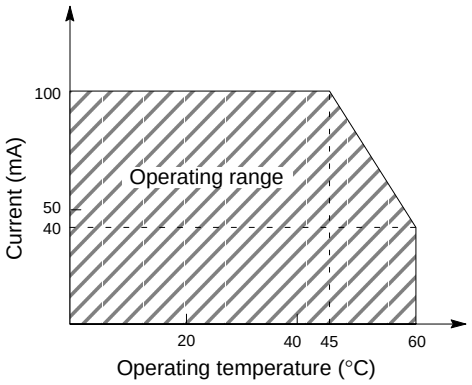

Operation

■ OUTPUT CIRCUIT

D5F-2B□0

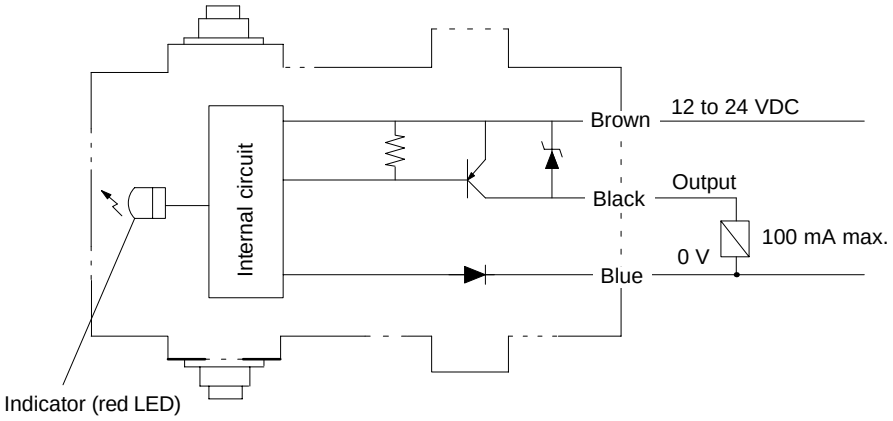

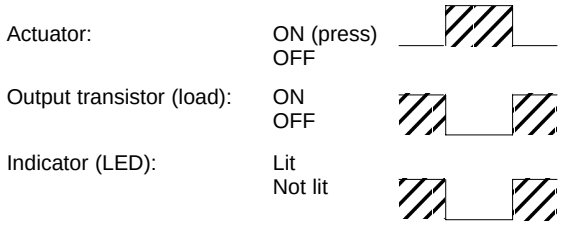

D5F-3C□0

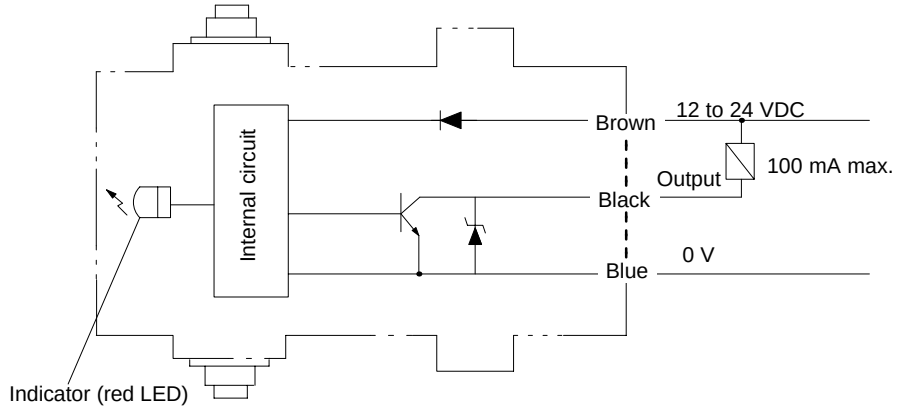

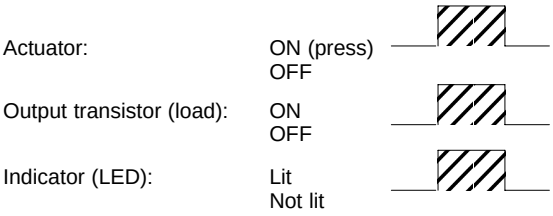

Dimensions

Unit: mm (inch)

■ LIMIT SWITCHES

D5F-2B□0
D5F-3C□0

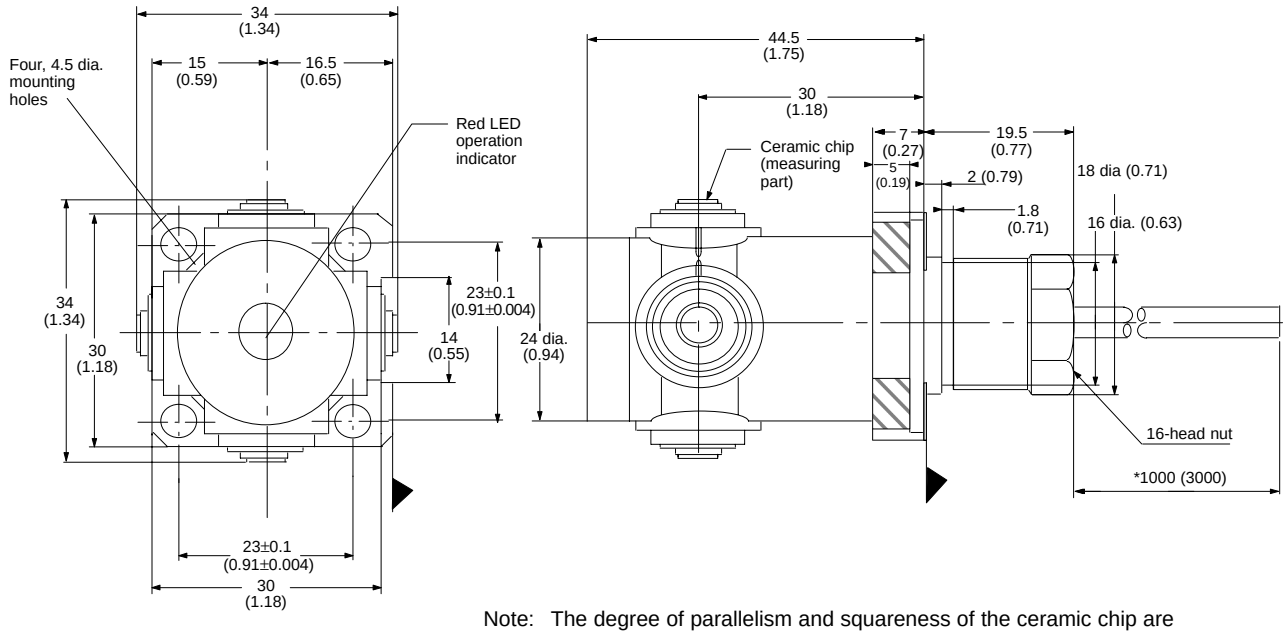

Note: The degree of parallelism and squareness of the ceramic chip are ±5 μm/5 mm against the reference plane.

Precautions

■ CONNECTING

Take the residual voltage (2 V max.) into consideration when connecting a load or power supply.

When the internal circuit of the switch is open, there is a current leakage of 0.15 mA max. and a residual voltage on the load. Check the release voltage of the load before use.

■ NOISE

Excessive external noise through the power line can affect the operating accuracy of the switch (refer to the table below). If required, use the correct noise filter to increase accuracy.

Level	Influence on accuracy
1 kV p-p	3 μm max. (0.118×10^{-3} in)
1.5 kV p-p	5 μm max. (0.196×10^{-3} in)

■ OPERATING

Do not press the plungers located opposite each other at the same time, or the switch could be damaged.

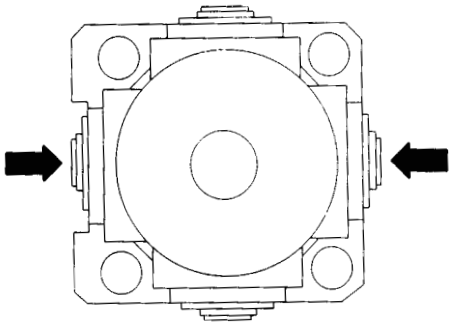

NOTE: DIMENSIONS SHOWN ARE IN MILLIMETERS. To convert millimeters to inches divide by 25.4.

OMRON®

OMRON ELECTRONICS, INC.
One East Commerce Drive
Schaumburg, IL 60173
1-800-55-OMRON

OMRON CANADA, INC.
885 Milner Avenue
Scarborough, Ontario M1B 5V8
416-286-6465

Cat. No. CEDSAX3 10/99 Specifications subject to change without notice. Printed in U.S.A.