OMRON Industrial Automation | Global

Print

Oil-resistive, Long-range Photoelectric Sensor with Metal Housing

E3S-CD61 2M

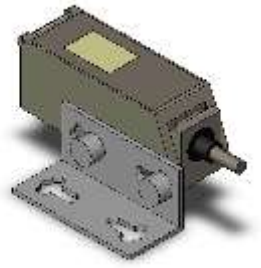

Image

Oil-resistant, Long-range Photoelectric Sensor with Metal Housing, Diffuse-reflective, Vertical type, Sensing distance: 700 mm, Pre-wired model, 2 m

Sensing method	Diffuse-reflective
Sensing distance	White paper 300 x 300 mm: 700 mm
Light source	Infrared LED (850 nm)
Connection method	Pre-wired models

Ratings/Performance

As of July 25, 2024

Shape	Square type
Sensing method	Diffuse-reflective
Sensing distance	White paper 300 x 300 mm: 700 mm
Differential distance	20% max. of sensing distance
Light source	Infrared LED (850 nm)
Power supply voltage	10 to 30 VDC ripple (p-p) 10% included
Current consumption	40 mA max.
Control output	NPN/PNP open collector (selectable) 30 VDC max. 100 mA max. Residual voltage: 1.2 V max. (NPN output) Residual voltage: 2 V max. (PNP output)
Operation mode	Light-ON/Dark-ON selectable
Protective circuit	Output short-circuit protection, Power supply reverse polarity protection
Response time	Operate or reset: 1 ms max.
Sensitivity setting	2-turn endless adjustment (with indicator)
Ambient illuminance	Incandescent lamp: 5,000 lx max. Sunlight: 10,000 lx max.
Ambient temperature range (Operating)	-25 to 55 ℃ (with no freezing or condensation)
Ambient temperature range (Storage)	-40 to 70 ℃ (with no freezing or condensation)
Ambient humidity range (Operating)	35 to 85 % (with no condensation)
Ambient humidity range (Strage)	35 to 95 % (with no condensation)
Insulation resistance	20 MΩ min. (500 VDC megger)
Dielectric strength	1000 VAC 50/60 Hz 1 min

Vibration resistance	Destruction: 10 to 2000 Hz, 1.5 mm or 300 m/s^2 double amplitude for 0.5 hours each in X, Y, and Z directions
Shock resistance	Destruction: 1000 m/s^2 3 times each in X, Y and Z directions
Degree of protection	IEC: IP67 Company standard: Oil-proof NEMA: 6P (indoors only)
Connection method	Pre-wired models (Cable length 2 m)
Indicator	Light indicator (red), Stability indicator (green)
Weight	Package: Approx. 150 g
Accessories	Instruction manual, Mounting bracket (with screws), Adjustment driver
Material	Case: Zinc diecast Lens: Methacrylate resin Cover: Polyether sulfone Mounting Bracket: Stainless steel (SUS304)

As of July 25, 2024

Dimensions

As of July 25, 2024

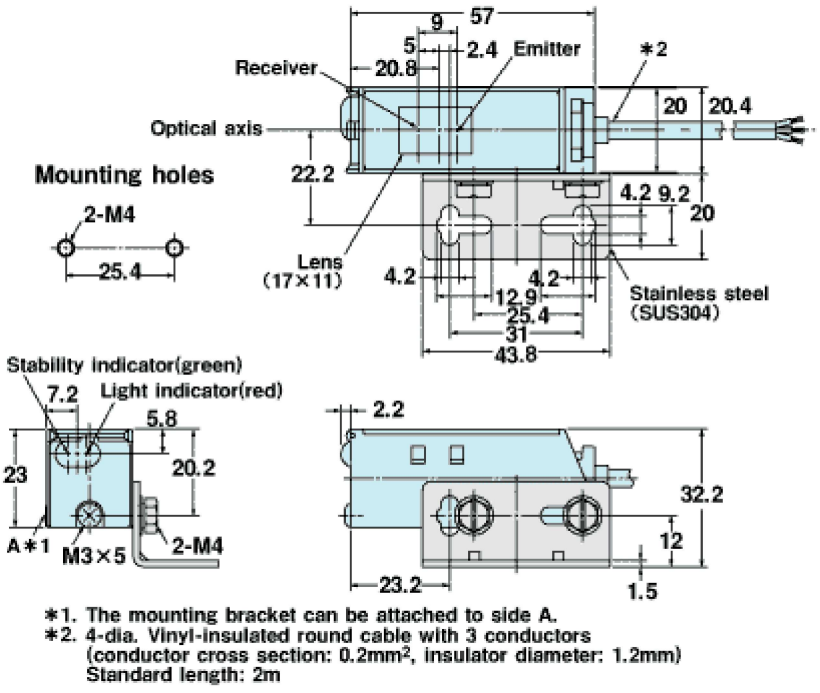

*1. The mounting bracket can be attached to side A.
*2. 4-dia. Vinyl-insulated round cable with 3 conductors
(conductor cross section: 0.2mm^2, insulator diameter: 1.2mm)
Standard length: 2m

As of July 25, 2024

Output circuit diagram

As of July 25, 2024

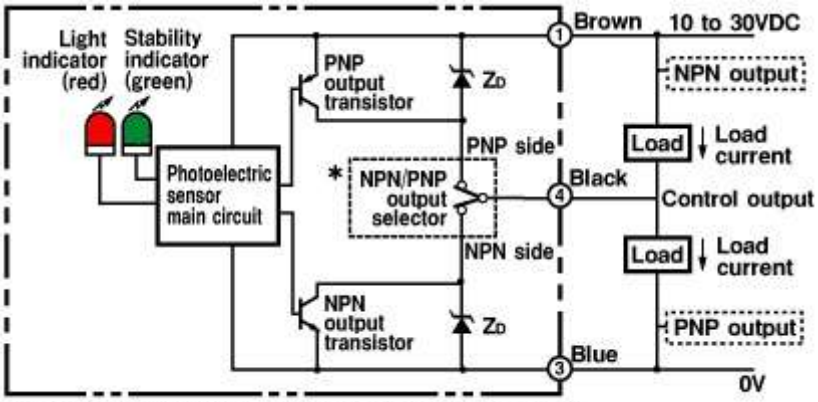

*Please adjust the selector to NPN side or PNP side.

As of July 25, 2024

Timing chart

As of July 25, 2024

NPN/PNP output selector	Operation mode	Timing chart	Mode switch
NPN output	Light ON		L.ON (LIGHT ON)
	Dark ON	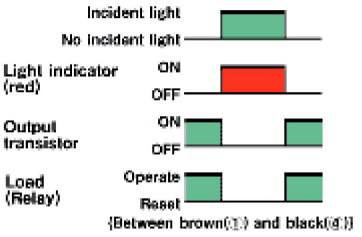	D.ON (DARK ON)
PNP output	Light ON	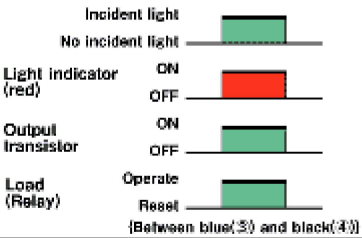	L.ON (LIGHT ON)
	Dark ON	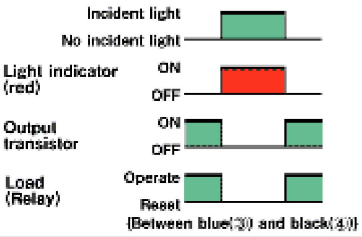	D.ON (DARK ON)

As of July 25, 2024

Operating range

As of July 25, 2024

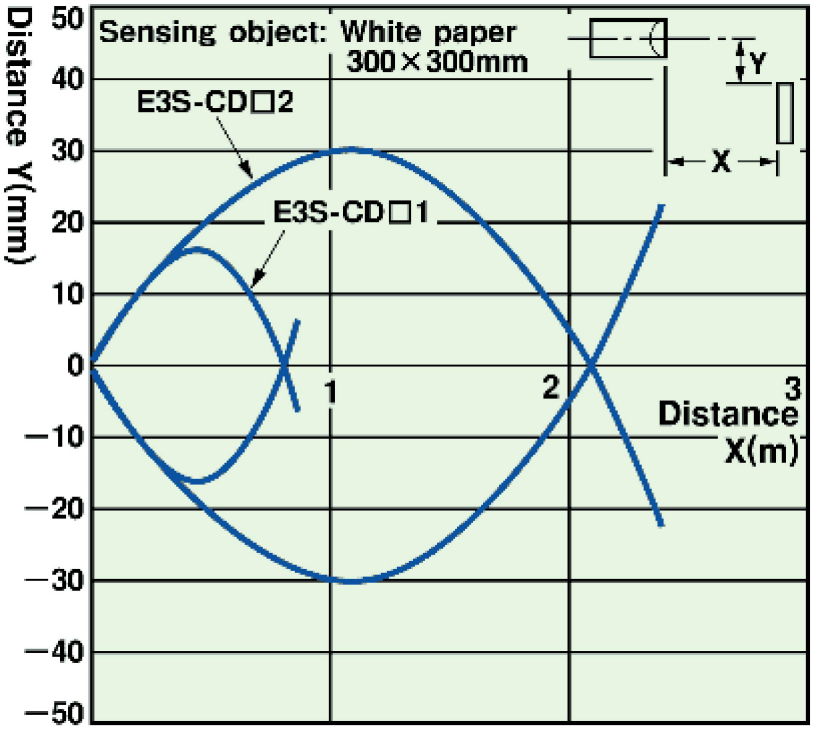

As of July 25, 2024

Setting distance

As of July 25, 2024

Excess gain ratio vs. setting distance

Diffuse-reflective

E3S-CD□□ (-M1J)

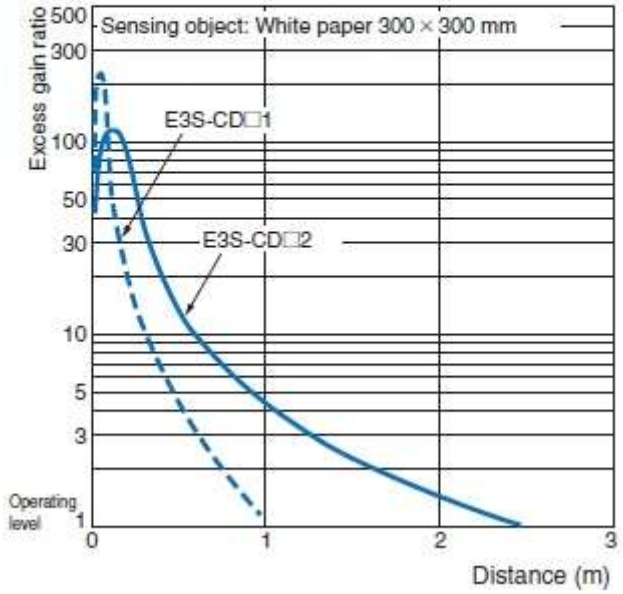

As of July 25, 2024