General Description

Series D1SE directional control valves are equipped with a wet pin armature solenoid, drain-free, tapered poppet valve and compatible with the standards DIN NG6, CETOP 3, and NFPA D03. Due to the 3/2 way design, port A is either connected with P or discharged in the tank. The neutral position (solenoid not activated) is taken automatically by a return spring. This position remains until the solenoid is energized.

The valve poppet including activation lever and armature of the solenoid are located in the pressurized oil chamber of connection T. The valve poppet is designed such that there can be no differential area in its axial operational direction (opening, closing). Thus it is statically pressure-balanced so that the valve can be switched in both flow directions even under pressure.

The unit has an all-steel design, the important functional inner parts are hardened, the poppet and seat are ground.

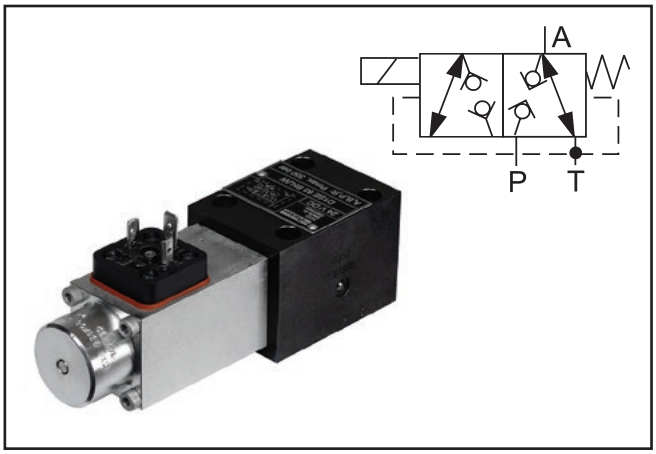

Features

- Low leakage poppet design.
- Fits NFPA D03 mountng.
- Pressure balanced.

Ordering Information

D	1	S	E		B			W	
Directional Control Valve	Basic Valve	Seat Valve	Wet Pin Armature Solenoid, Flanged	Spool	Style	Seal	Solenoid Voltage	Solenoid Connection Without Plug	Design Series

NOTE: Not required when ordering.

DIN NG6
CETOP 3
NPPA D03

Code	Description
30	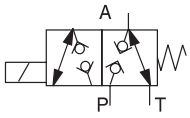
83	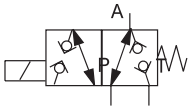

Code	Description
K	12V
J	24V
U*	98V
G*	205V

* For alternating current use plug with rectifier.

Code	Description
N	Nitrile
V	Fluorocarbon

Coils for repair

Voltage	Ordering Code
12V	7329700 - 12V
24V	7329700 - 24V
98V	7329700 - 98V
205V	7329700 - 205V

Weight: 0.8 kg (1.76 lbs)

Bold: Designates Tier I products and options.

Non-Bold: Designates Tier II products and options.
These products will have longer lead times.

⚠ **WARNING:** This product can expose you to chemicals including Lead, Nickel (Metallic), or 1,3-Butadiene which are known to the State of California to cause cancer, and Lead or 1,3-Butadiene which is known to the State of California to cause birth defects and other reproductive harm. For more information go to www.P65Warnings.ca.gov.

A

General	
Design	Directional poppet valve
Actuation	Solenoid
Size	DIN NG6 / CETOP 3 / NFPA D03
Mounting Interface	DIN 24340 A6 / ISO 4401 / CETOP RP 121-H / NFPA D03
Mounting Position	Unrestricted
Ambient Temperature	-25°C to +50°C (-13°F to +122°F), observe permissible duty cycle
Hydraulic	
Max. Operating Pressure	350 Bar (5075 PSI) (P, A, and T)
Fluid	Hydraulic oil in accordance with DIN 51524 / 51525
Fluid Temperature	-25°C to +70°C (-13°F to +158°F)
Viscosity Permitted **Recommended**	10...500 cSt / mm²/s (46...2318 SSU) 30...80 cSt / mm²/s (139...371 SSU)
Filtration	ISO 4406 (1999); 18/16/13 (meet NAS 1638: 7)
Internal Leakage	3-5 DPM per seat
Maximum Flow	20 LPM (5.28 GPM) (at Δp = 10 bar)

Static / Dynamic				
Step Response	Energized: approx. 50 ms De-energized: approx. 60 ms			
Electrical Characteristics				
Duty Ratio	See Diagram			
Max. Switching Frequency	2000 1/h			
Protection Class	IP 65 in accordance with DIN 40050 (plugged and mounted)			
Code	K	J	U*	G*
Supply Voltage	12 VDC	24 VDC	98 VDC	205 VDC
Tolerance Supply Voltage	±10%	±10%	±10%	±10%
Current Consumption	1.95A	1.1A	0.25A	0.13A
Power Consumption	23.4 W	26.4 W	24.3 W	26.6 W
Solenoid Connection	Connector as per EN 175301-803			
Min. Wiring	3 x 1.5 mm^2 recommended			
Max. Wiring Length	50m (164') recommended			

* For a silicon bridge rectifier, set up apart from unit for connecting to a 50 or 60 Hz power supply, 110 V~(98=) or 230V~ (205V=).
With electrical connections the protective conductor (PE ⏚) must be connected according to the relevant regulations.

A

Performance Curves

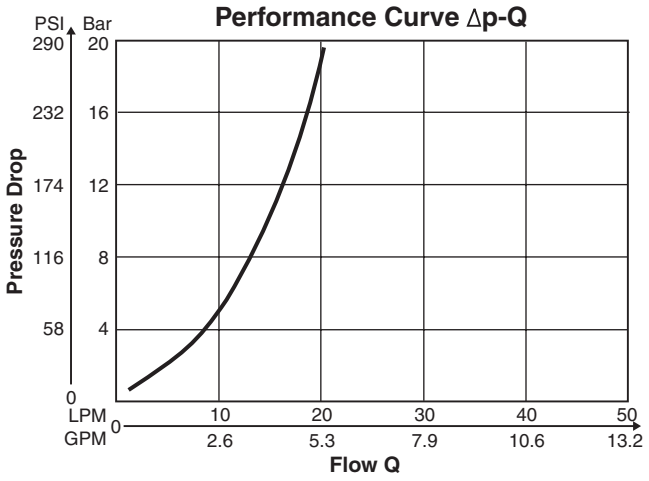

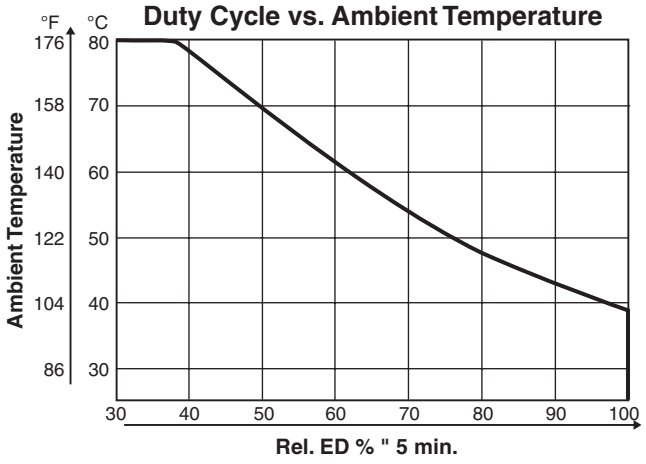

Dimensions

Inch equivalents for millimeter dimensions are shown in (**)

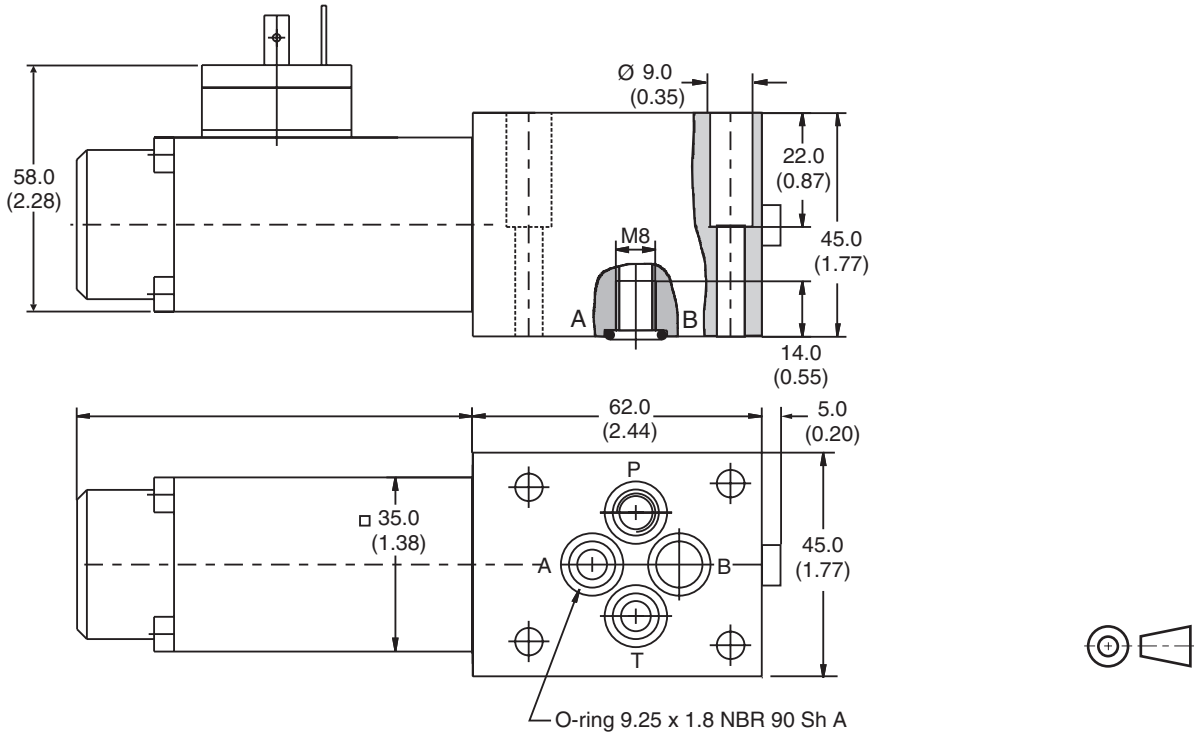

Surface Finish	Kit			Seal Kit
R_{max}6.3 ⏥ 0.01/100	BK375	4x M5x30 DIN 912 12.9	6.8 Nm ± 15%	Nitrile: SK-D1SE-70 Fluorocarbon: SK-D1SE-V70

The space necessary to remove the plug per DIN 43650, design type AF is at least 15 mm (0.59").
The torque for the screw M3 of the plug has to be 0.5 Nm (0.37 lb.-ft.) to 0.6 Nm (0.44 lb.-ft.).

Parker Hannifin Corporation
Hydraulic Valve Division
Elyria, Ohio, USA