DENISON HYDRAULICS
3-Way Vent Valve
Series VV01

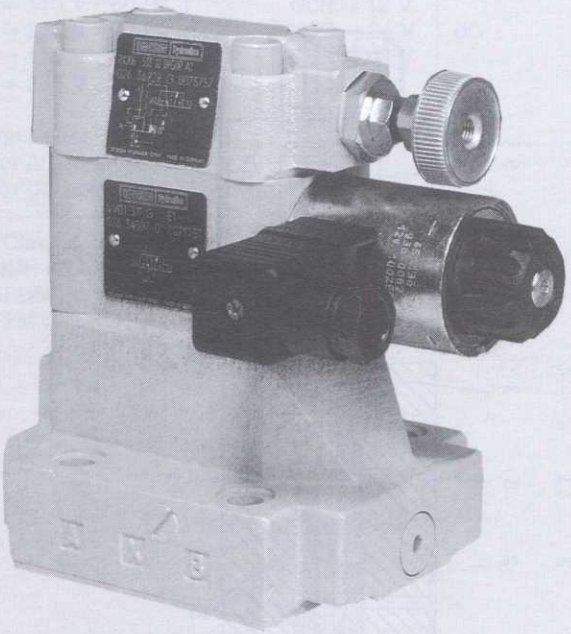

Pressure control valve R4
and vent valve VV01 with DC solenoid



Vent valve VV01 with
AC solenoid

Publ. S3–ML 2150–A, replaces S3–ML 215–B

DENISON Hydraulics

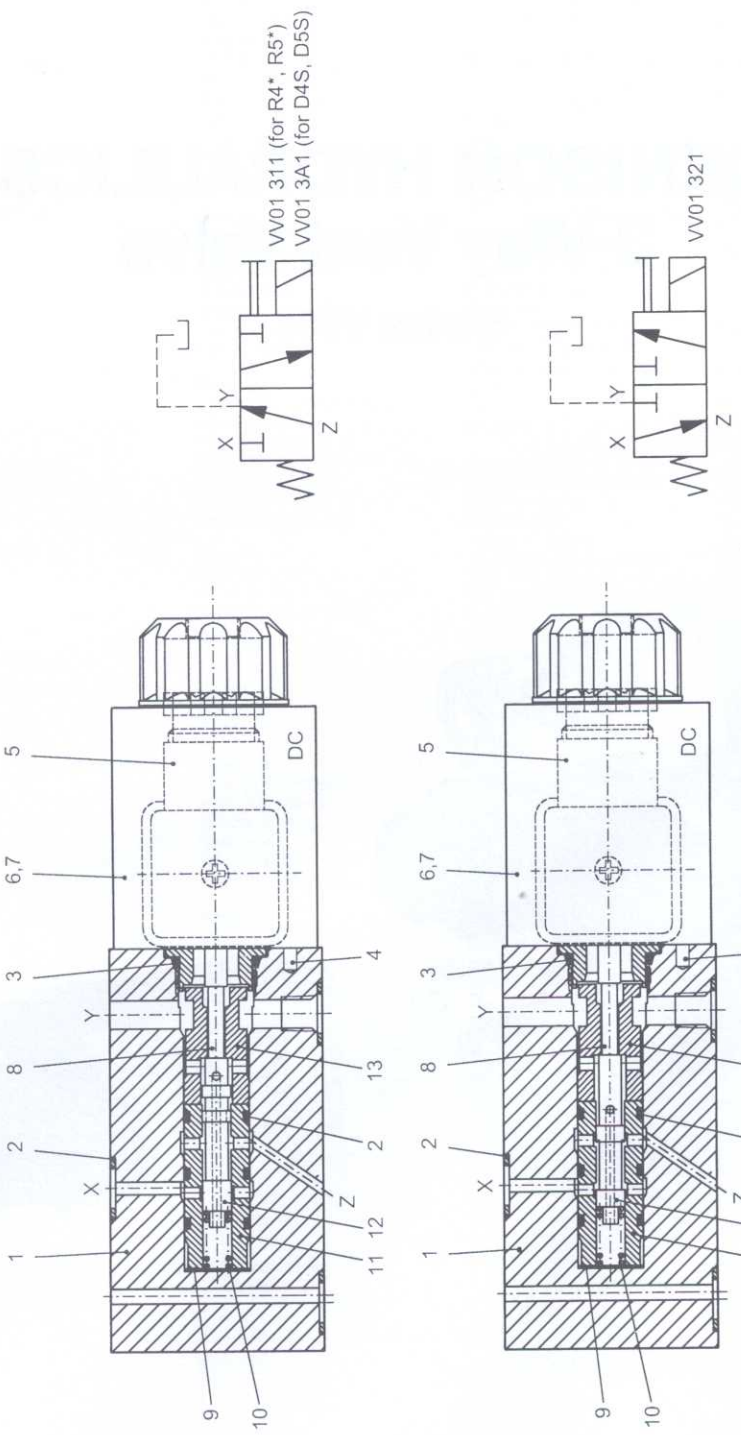
VV01 311 (for R4*, R5*)
VV01 3A1 (for D4S, D5S)
VV01 321
X
Y
Z
T
DC
1
2
3
4
5
6,7
8
9
10
11
12
13

Item Pos. Réf.	*English*	*Deutsch*	*Français*	*Italiano*	*Español*	Part No. Teil - Nr. Code No. Cod. No. Código	Qty. Stck. Qté. Qtà. Ctd.
1	Body	Gehäuse	Corps	Corpo	Cuerpo	036-64996-0	1
2	O-Ring NBR (S1)	Runddichtring NBR (S1)	Joint torique NBR (S1)	O-Ring NBR (S1)	Tórica NBR (S1)	691-00013-0	6
	O-Ring EPDM (S4)	Runddichtring EPDM (S4)	Joint torique EPDM (S4)	O-Ring EPDM (S4)	Tórica EPDM (S4)	694-00013-0	6
	O-Ring FPM (S5)	Runddichtring FPM (S5)	Joint torique FPM (S5)	O-Ring FPM (S5)	Tórica FPM (S5)	695-00013-0	6
3	O-Ring NBR (S1)	Runddichtring NBR (S1)	Joint torique NBR (S1)	O-Ring NBR (S1)	Tórica NBR (S1)	605-00024-8	1
	O-Ring EPDM (S4)	Runddichtring EPDM (S4)	Joint torique EPDM (S4)	O-Ring EPDM (S4)	Tórica EPDM (S4)	605-00040-8	1
	O-Ring FPM (S5)	Runddichtring FPM (S5)	Joint torique FPM (S5)	O-Ring FPM (S5)	Tórica FPM (S5)	605-00043-8	1
4	Roll pin	Spannhülse	Pied de positionnement	Spina elastica	Espiga elástica	325-00003-8	1
5	Plug-in connector "B" (black)	Gerätesteckdose "B" (schwarz)	Prise embrochable "B" (noir)	Connettore "B" (nero)	Conector "B" (negro)	167-01008-8	1
6	Coil 115 V / 50 Hz	Spule 115 V / 50 Hz	Bobine 115 V / 50 Hz	Bobina 115 V / 50 Hz	Bobina 115 V / 50 Hz	121-00402-8	1
	Coil 230 V / 50 Hz	Spule 230 V / 50 Hz	Bobine 230 V / 50 Hz	Bobina 230 V / 50 Hz	Bobina 230 V / 50 Hz	121-00401-8	1
	Coil 115 V / 60 Hz	Spule 115 V / 60 Hz	Bobine 115 V / 60 Hz	Bobina 115 V / 60 Hz	Bobina 115 V / 60 Hz	121-00394-8	1
	Coil 230 V / 60 Hz	Spule 230 V / 60 Hz	Bobine 230 V / 60 Hz	Bobina 230 V / 60 Hz	Bobina 230 V / 60 Hz	121-00395-8	1
	Coil 12 V DC	Spule 12 V=	Bobine 12 V C.C.	Bobina 12 V C.C.	Bobina 12 V C.C.	121-00800-8	1
	Coil 24 V DC	Spule 24 V=	Bobine 24 V C.C.	Bobina 24 V C.C.	Bobina 24 V C.C.	121-00801-8	1
	Coil 48 V DC	Spule 48 V=	Bobine 48 V C.C.	Bobina 48 V C.C.	Bobina 48 V C.C.	121-00804-8	1
7	Tube cartridge assembly with manual override for AC-solenoid	Ankerrohr, komplett mit Nothandbetätigung für Wechselstrommagnet	Manchon d'induit, complet avec commande manuelle pour solénoïde C.A.	Insieme cannotto con comando manuale per solenoide C.A.	Conjunto tubo solenoide con actuador manual para solenoide C.A.	S26-28174-0	1
	Tube cartridge assembly without manual override for AC-solenoid	Ankerrohr, komplett ohne Nothandbetätigung für Wechselstrommagnet	Manchon d'induit, complet sans commande manuelle pour solénoïde C.A.	Insieme cannotto senza comando manuale per solenoide C.A.	Conjunto tubo solenoide sin actuador manual para solenoide C.A.	S26-28175-0	1
	Tube cartridge assembly with manual override for DC-solenoid	Ankerrohr, komplett mit Nothandbetätigung für Gleichstrommagnet	Manchon d'induit, complet avec commande manuelle pour solénoïde C.C.	Insieme cannotto con comando manuale per solenoide C.C.	Conjunto tubo solenoide con actuador manual para solenoide C.C.	S26-55817-0	1
	Tube cartridge assembly without manual override for DC-solenoid	Ankerrohr, komplett ohne Nothandbetätigung für Gleichstrommagnet	Manchon d'induit, complet sans commande manuelle pour solénoïde C.C.	Insieme cannotto senza comando manuale per solenoide C.C.	Conjunto tubo solenoide sin actuador manual para solenoide C.C.	S26-55818-0	1
8	Pin	Stößel	Poussoir	Perno	Pasador	810-00034-8	1
9	Cup spring	Tellerfeder	Ressort à disques	Molla a tazza	Arandela muelle	700-77003-8	1
10	Spring	Feder	Ressort	Molla	Muelle	036-84936-0	1
11	Sleeve	Buchse	Chemise	Camicia	Camisa	036-39982-0	1
12	Spool:	Kolben:	Piston:	Pistone:	Pistón:		
	- for VV01 311	- für VV01 311	- pour VV01 311	- per VV01 311	- para VV01 311	036-39985-0	1
	- for VV01 3A1	- für VV01 3A1	- pour VV01 3A1	- per VV01 3A1	- para VV01 3A1	036-81254-0	1
	- for VV01 321	- für VV01 321	- pour VV01 321	- per VV01 321	- para VV01 321	036-39984-0	1
13	Spacer	Distanzbuchse	Entretoise	Distanziale	Espaciador	036-64997-0	1

Item Pos. Réf.	*English*	*Deutsch*	*Français*	*Italiano*	*Español*	Part No. Teil - Nr. Code No. Cod. No. Código	Qty. Stck. Qté. Qtà. Ctd.
	Not shown:	**Nicht dargestellt:**	**Non représenté:**	**Non rappresentato:**	**No reprensentado:**		
	Name plate	Typenschild	Plaque d'identification	Targhetta di identificazione	Placa Nomenclatura	036-84772-0	1
	Rivet	Kerbnagel	Rivet	Rivetto	Remache	320-10203-0	2
	Seal Kits:	**Dichtringsätze:**	**Pochettes de joints:**	**Serie guarnizioni:**	**Juegos de Juntas:**		
	Seals (NBR-S1)	Dichtringe (NBR-S1)	Joints (NBR-S1)	Guarnizioni (NBR-S1)	Juntas (NBR-S1)	S26-35237-0	1
	Seals (EPDM-S4)	Dichtringe (EPDM-S4)	Joints (EPDM-S4)	Guarnizioni (EPDM-S4)	Juntas (EPDM-S4)	S26-35237-4	1
	Seals (FPM-S5)	Dichtringe (FPM-S5)	Joints (FPM-S5)	Guarnizioni (FPM-S5)	Juntas (FPM-S5)	S26-35237-5	1

MODEL CODE – VENT VALVE VV01

Model Number: VV01 – 3 . . ... – . – .

(1) (2) (3) (4) (5) (6)

(1) **Series**

(2) **Spool Position**

normal position: free flow from Z to Y
switch position: X to Z

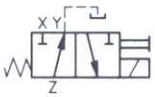

1 = for R4*, R5*
A = for D4S, D5S

2 = normal position: X to Z
switch position: free flow from Z to Y

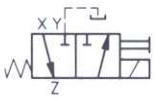

(3) **Control**

1 = solenoid with manual override
2 = solenoid without maual override
D = pneumatic } on request
Q = hydraulic }

(4) **Solenoid Voltage and Current**

W01 = 115 V / 60 Hz } AC
W02 = 230 V / 60 Hz }
W06 = 115 V / 50 Hz }
W07 = 230 V / 50 Hz }

G0R = 12 V } DC
G0Q = 24 V }
G0H = 48 V }

(5) **Design Letter**

D = for AC solenoid
E = for DC solenoid

(6) **Seal Class**

1 = NBR (Buna N) Standard
4 = EPDM
5 = FPM (Viton®)

Rights of alteration reserved.
Änderung vorbehalten.
Sous réserve d'eventuelles modification.
Con riserva di modifica.
Modificaciones posibles dentro de interés de una mejora.

SALES & SERVICE WORLDWIDE

International Distributors
In Europe:
Cyprus
Czech Republic
Finland
Greece
Hungary
Norway
Poland
Portugal
Roumania
Russia
Slovakia
Slovenia (Croatia–Bosnia–Macedonia)
Switzerland
Turkey
Yougoslavia

In Africa:
Algeria
Egypt
Ivory Coast
Morocco
South Africa
Tunisia

In Middle East:
Bahrain
Iran
Israel
Jordan
Lebanon
Pakistan
Qatar
Saudi Arabia
Syria
United Arab Emirates

In Far East:
China
Indonesia
Korea
Malaysia
New Zealand
Philippines
Taiwan
Thailand

Australia
DENISON HYDRAULICS Pty.Ltd.
41–43 St. Hilliers Road
P.O. Box 192
Auburn, N.S.W. 2144
Australia
Tel. (02) 9646 5200
Fax (02) 9643 1305
Other sales offices:
Brisbane
Melbourne
Perth

Austria
DENISON HYDRAULIK GmbH
Zweigniederlassung Linz
Haidbachstraße 69
A-4061 Pasching
Austria
Tel. (0 72 29) 6 48 87
Fax (0 72 29) 6 30 92

Benelux
DENISON HYDRAULICS
Benelux B.V.
Pascalstraat 100
NL-3316 GR Dordrecht
Holland
Tel. (078) 6543 070
Fax (078) 6175 755

Canada
DENISON HYDRAULICS Inc.
2880 Brighton Road Unit 1
Oakville, ON L6H 5S3
Canada
Tel. (905) 829-5800
Fax (905) 829-5805
Other sales offices:
Montreal
Richmond

Denmark
DENISON HYDRAULICS AS
Industrikrogen 2
DK-2635 Ishöj
Denmark
Tel. (043) 71 15 00
Fax (043) 71 15 16

Finland
DENISON LOKOMEC Oy
Polunmäenkatu 22
P.O. Box 115
FIN-33721 Tampere
Finland
Tel. (+358) 3 3575 100
Fax (+358) 3 3575 111

France
DENISON HYDRAULICS SA
14, Route du Bois Blanc
F-18105 Vierzon
France
Tel. +33.(0)2.48.53.01.20
Fax +33.(0)2.48.75.02.91
Other sales offices:
Paris
Lyon
Bordeaux

Germany
DENISON HYDRAULIK GmbH
Postfach 540
D-40705 Hilden
Auf dem Sand 14
D-40721 Hilden
Germany
Tel. (0 21 03) 94 03
Fax (0 21 03) 94 05 58
Other sales offices:
Dresden
Hannover
Stuttgart

Great Britain
DENISON HYDRAULICS Ltd.
Kenmore Road
Wakefield 41
Industrial Estate
Wakefield, West Yorkshire
WF2 OXE England
Tel. (01924) 826 021
Fax (01924) 826 146
Other sales office:
Burgess Hill

Hong Kong & P. R. China
DENISON HYDRAULICS Ltd.
Unit 3, 25 Floor
Wharf Cable Tower
9 Hoi Shing Road
Tsuen Wan, N.T., Hong Kong
Tel. 24988381
Fax 24991522
Other sales office:
Shanghai
Taipei

Italy
DENISON HYDRAULICS S.r.l.
v.le Europa 68
20090 Cusago (MI)
Tel. (02) 9 03 30 - 1
Fax (02) 90 39 06 94 / 5 / 6

Japan
DENISON JAPAN INC.
4–2–1 Tsujido–Shinmachi
Fujisawa 251
Japan
Tel. (0466) 35 - 3050
Fax (0466) 35 - 2019
Other sales offices:
Osaka

Latin America
DENISON HYDRAULICS Inc.
6167 NW 181 Terrace Circle North
Miami, FL 33015
Tel. 305 362 2246
Fax 305 362 2246

Singapore
DENISON HYDRAULICS S.E.A. Pte. Ltd.
Blk 4012 Ang Mo Kio Ave 10
07-01D Techplace I
Singapore 569628
Tel. (65) 268 78 40
Fax (65) 268 78 47

Spain
DENISON HYDRAULICS S.A.
Gomis 1
08023 Barcelona
Spain
Tel. (93) 253 19 90
Fax (93) 211 65 07
Other sales office:
San Sebastian

Sweden
DENISON HYDRAULICS
SVENSKA AB
Sporregatan 13
S-21377 Malmö
Sweden
Tel. (040) 600 13 00
Fax (040) 600 13 50
Other sales office:
Stockholm

USA
DENISON HYDRAULICS Inc.
14249 Industrial Parkway
Marysville, OH 43040
USA
Tel. (937) 644-3915
Fax (937) 642-3738
For nearest distributor call
toll free 1-800-551-5956
Other sales offices:
Arlington – TX
Cincinnati – OH
Houston – TX
Medina – OH
Moline – IL
Mulberry – FL
Portland – OR
Trabuco Canyon – CA
W. Conshohocken – PA

Other European, Middle East and African Countries Contact
DENISON HYDRAULICS SA
14, Route du Bois Blanc
BP 539
F-18105 Vierzon
France
Tel. +33.(0)2.48.53.01.45
Fax +33.(0)2.48.53.01.46
Telex 760 624

Your local DENISON representative:

Printed in Germany 05/2002

DENISON Hydraulics

Parker
Hydraulic Valve Division
520 Ternes Avenue
Elyria, Ohio 44035
Ph: (440) 366-5200
Fax: (440) 366-5253