Features

- Comprehensive diagnostics for fieldbus physical layer and power supply
- Plug-in Module for the FieldConnex Power Hub
- Precise measurements through passive circuits
- For commissioning, online monitoring and troubleshooting
- For FOUNDATION Fieldbus H1 and PROFIBUS PA
- Installation in Zone 2/Class I, Div. 2
- System state and fault indication via LEDs
- Display of data in the safety of the control room
- Automatic setup of diagnostic system
- Full software integration into PCS and PAM possible

Function

Designed as a plug-in module for the FieldConnex® Power Hub, this Advanced Diagnostic Module (ADM) is a comprehensive measurement tool for the physical layer of up to four fieldbus segments. It's passive input circuits leave the physical layer untouched for exact data. The ADM detects gradual or sudden changes and helps trace even intermittent malfunctions.

The ADM supports commissioning, online monitoring and troubleshooting. It can be integrated tightly into the DCS and PAM via a separate diagnostic bus, making the fieldbus physical layer itself a managable asset. Configuration tools automate setup of the ADM and of selected DCS.

The Diagnostic Manager is the software for display and operation from the safety of the control room. The Professional Edition provides powerful functions and wizards simplifying and automating work procedures: Embedded expert system data historian and a built-in oscilloscope are included. (see datasheet DTM-FC.AD*).

Assembly





Connection

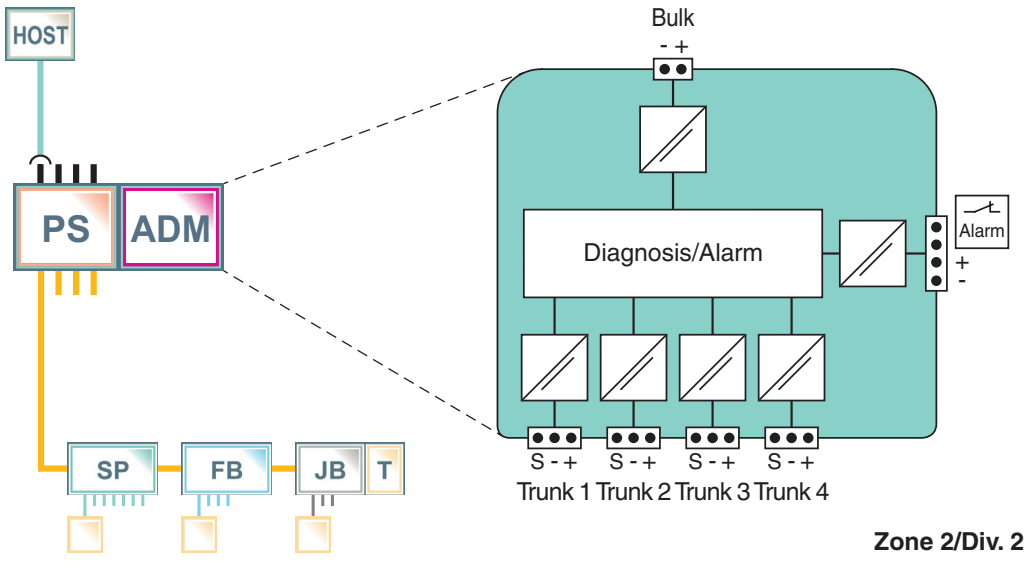

Release date 2019-05-06 13:31 Date of issue 2019-05-06 131000_eng.xml

General specifications		
Design / Mounting		Motherboard based
Supply		
Rated voltage	U_r	19.2 ... 35 V
Rated current	I_r	110 ... 30 mA
Power dissipation		max. 2 W
Fieldbus interface		
Number of segments		4
Fieldbus type		FOUNDATION Fieldbus/PROFIBUS PA
Rated voltage	U_N	9 ... 32 V
Indicators/operating means		
LED PRI PWR		green: on, primary bulk power supply connected
LED SEC PWR		green: on, secondary bulk power supply connected
LED Seg 1...4		yellow: bus activity; red 2 Hz flashing: alarm; red: hardware error
Fault signal		VFC alarm 1 A, 50 V DC, normally closed
DIP switch		diagnostic address 1...247, binary coded
Interface		
Interface type		diagnostic bus: RS 485
Galvanic isolation		
Fieldbus segment/Fieldbus segment		functional insulation acc. to IEC 62103, rated insulation voltage 50 V_{eff}
Fieldbus segment/Supply		functional insulation acc. to IEC 62103, rated insulation voltage 50 V_{eff}
Directive conformity		
Electromagnetic compatibility		
Directive 2014/30/EU		EN 61326-1:2013
Standard conformity		
Electromagnetic compatibility		NE 21:2011
Degree of protection		IEC 60529
Shock resistance		EN 60068-2-27
Vibration resistance		EN 60068-2-6
Ambient conditions		
Ambient temperature		-40 ... 70 °C (-40 ... 158 °F)
Storage temperature		-40 ... 85 °C (-40 ... 185 °F)
Relative humidity		< 95 % non-condensing
Shock resistance		15 g 11 ms
Vibration resistance		1 g , 10 ... 150 Hz
Pollution degree		max. 2, according to IEC 60664
Corrosion resistance		acc. to ISA-S71.04-1985, severity level G3
Mechanical specifications		
Connection type		motherboard specific
Core cross-section		motherboard specific
Housing material		Polycarbonate
Housing width		18 mm
Housing height		106 mm
Housing depth		128 mm
Degree of protection		IP20
Mass		approx. 100 g
Mounting		motherboard mounting
Mating cycles		100
Data for application in connection with hazardous areas		
Certificate		TÜV 04 ATEX 2500 X
Marking		⟨Ex⟩ II 3 G Ex nA IIC T4 Gc
Directive conformity		
Directive 2014/34/EU		EN 60079-0:2012 , EN 60079-11:2012 , EN 60079-15:2010
International approvals		
FM approval		
FM certificate		FM 19 US 0015 X and FM 19 CA 0011 X
FM marking		AEx/Ex ec IIC T4
IECEx approval		
IECEx certificate		IECEx TUN 13.0038X
IECEx marking		Ex nA IIC T4 Gc
Certificates and approvals		
Marine approval		DNV A-14038
Patents		This product may be covered by the following patent: US7,698,103
General information		

Release date 2019-05-06 13:31 Date of issue 2019-05-06 131000_eng.xml

Supplementary information	Observe the certificates, declarations of conformity, instruction manuals, and manuals where applicable. For information see

Dimensions

Dimensions complete redundant system*

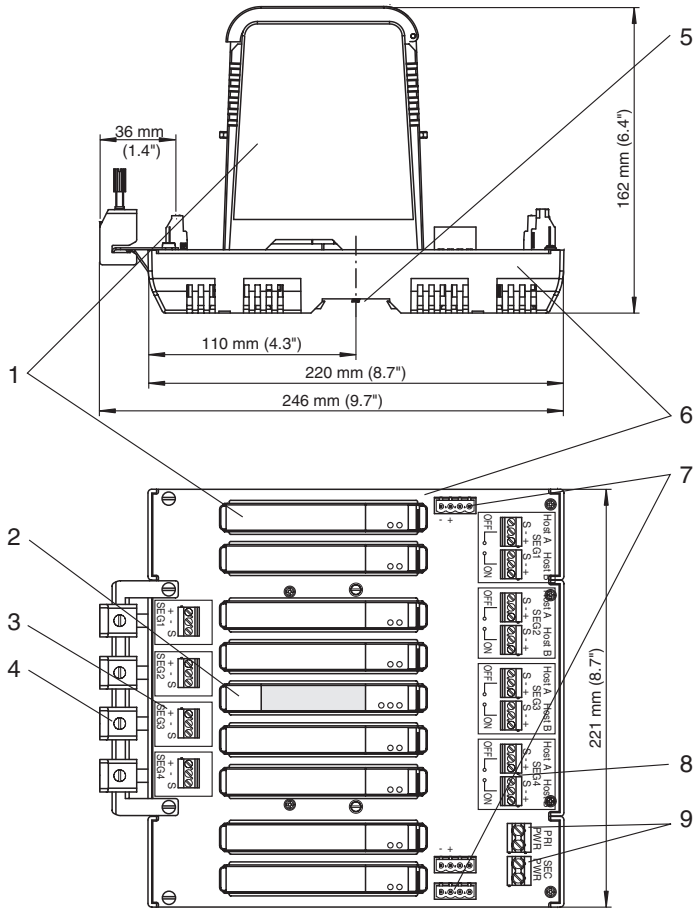

Dimensions Advanced Diagnostic Module*

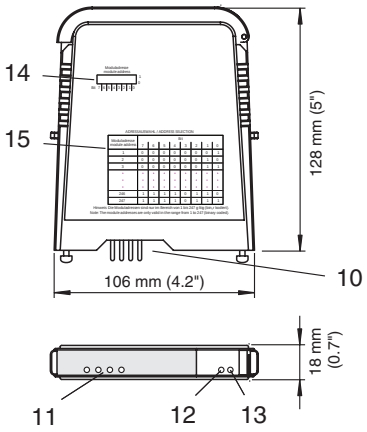

*all dimensions without tolerance indication

Description:

1 Power Supply Modules, see separate data sheets
2 Advanced Diagnostic Module
3 Connections for fieldbus trunk, terminator switch
4 Screening/earthing kit for trunk cables shield, optional accessory
5 Mounting slot for DIN rail
6 Motherboard, see separate data sheets
7 Connections for alarm, voltage free contact and diagnostics bus
8 Connections for redundant host
9 Connections for redundant bulk power supply
10 Plug connections to Motherboard
11 LED Seg 1 ... Seg 4
12 LED green SEC Power
13 LED green PRI Power
14 Dip-Switch-Array for diagnostic address or address on the diagnostics bus
15 Address selection overview

Installation note

System topology

Release date 2019-05-06 13:31 Date of issue 2019-05-06 131000_eng.xml

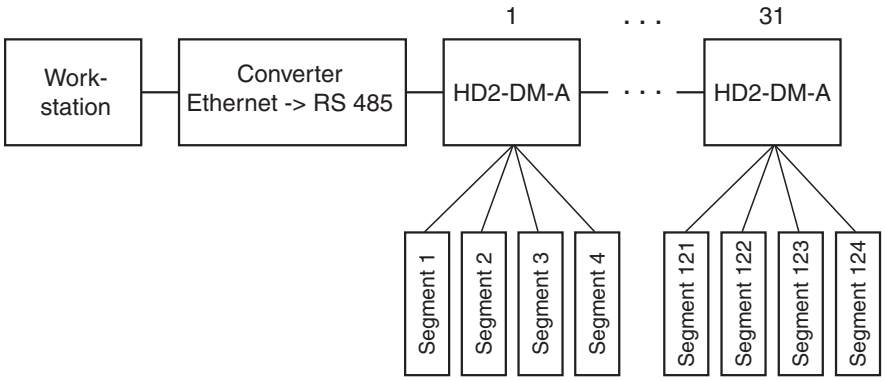

Installation notes see manual.

Accessories

- Software User Interface for monitoring up to or including 100 fieldbus segments: Diagnostic Manager, Professional Edition DTM-FC.AD
- Software User Interface for monitoring more than 100 fieldbus segments: Diagnostic Manager, Professional Edition DTM-FC.AD.1
- KT-MB-GT2AD Diagnostic Gateway

Release date 2019-05-06 13:31 Date of issue 2019-05-06 131000_eng.xml