Features

- 1-channel isolated barrier
- 24 V DC supply (Power Rail)
- Dry contact or NAMUR inputs
- Active transistor output
- Active fault output
- Line fault detection (LFD)
- Reversible mode of operation
- Up to SIL 2 acc. to IEC 61508

Function

This isolated barrier is used for intrinsic safety applications. It transfers digital signals (NAMUR sensors/mechanical contacts) from a hazardous area to a safe area.

The proximity sensor or switch controls an active transistor output per channel for the safe area load. The normal output state is reversed using switch S1. Switch S2 allows output II to be switched between a signal output and an error message output. Switch S3 enables or disables line fault detection of the field circuit.

During an error condition, the transistors revert to their de-energized state and LEDs indicate the fault according to NAMUR NE44.

A unique collective error messaging feature is available when used with the Power Rail system.

Assembly

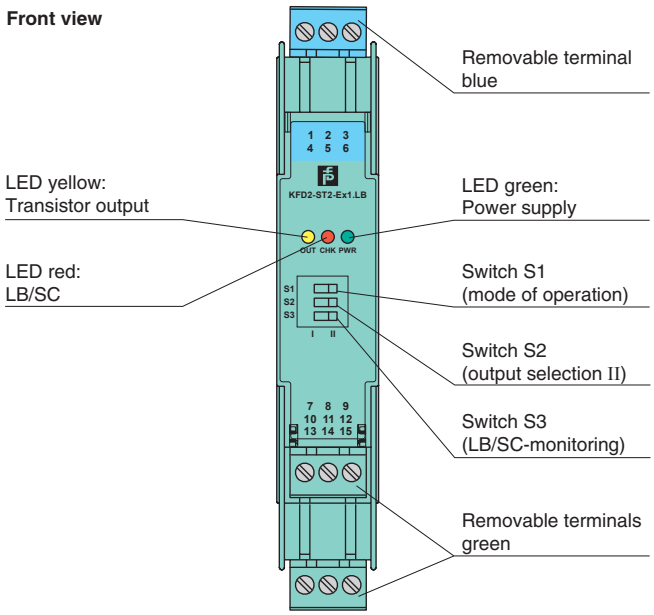

Connection

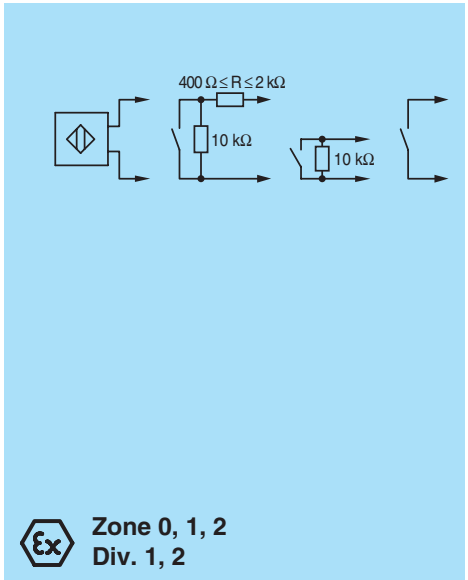

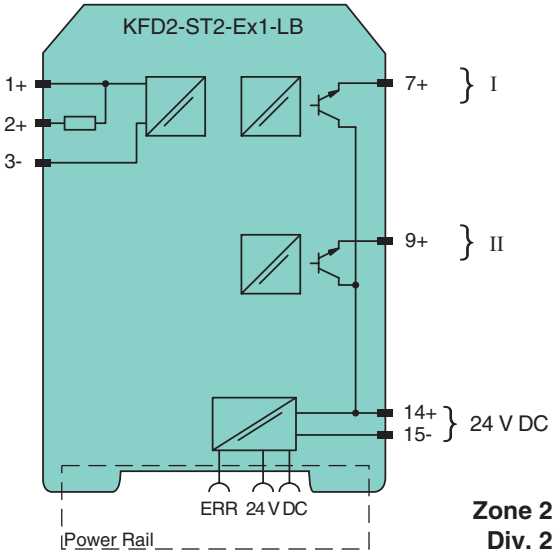

Release date 2019-01-25 09:38 Date of issue 2019-01-25 180997_eng.xml

General specifications		
Signal type		Digital Input
Functional safety related parameters		
Safety Integrity Level (SIL)		SIL 2
Supply		
Connection		Power Rail or terminals 14+, 15-
Rated voltage	U_r	20 ... 30 V DC
Ripple		≤ 10 %
Rated current	I_r	≤ 50 mA
Input		
Connection side		field side
Connection		terminals 1+, 2+, 3-
Rated values		acc. to EN 60947-5-6 (NAMUR), see system description for electrical data
Open circuit voltage/short-circuit current		approx. 8 V DC / approx. 8 mA
Switching point/switching hysteresis		1.2 ... 2.1 mA / approx. 0.2 mA
Line fault detection		breakage I ≤ 0.1 mA , short-circuit I > 6 mA
Output		
Connection side		control side
Connection		output I: terminals 7+ ; output II: terminals 9+
Signal level		1-signal: (L+) - 3.5 V (100 mA, short-circuit protected) 0-signal: switched off (off-state current ≤ 10 µA)
Output I		signal , electronic output, active
Output II		signal or error message , electronic output, active
Collective error message		Power Rail
Transfer characteristics		
Switching frequency		≤ 5 kHz
Galvanic isolation		
Input/Output		reinforced insulation acc. to IEC 62103, rated insulation voltage 300 V_{rms}
Input/power supply		reinforced insulation acc. to IEC 62103, rated insulation voltage 300 V_{rms}
Output/power supply		not available , common pole terminal 14+
Output/Output		not available , common pole terminal 14+
Indicators/settings		
Display elements		LEDs
Control elements		DIP-switch
Configuration		via DIP switches
Labeling		space for labeling at the front
Directive conformity		
Electromagnetic compatibility		
Directive 2014/30/EU		EN 61326-1:2013 (industrial locations)
Conformity		
Galvanic isolation		IEC 62103:2003
Electromagnetic compatibility		NE 21:2004
Degree of protection		IEC 60529:2001
Input		EN 60947-5-6:2000
Ambient conditions		
Ambient temperature		-20 ... 60 °C (-4 ... 140 °F)
Mechanical specifications		
Degree of protection		IP20
Connection		screw terminals
Mass		approx. 150 g
Dimensions		20 x 119 x 115 mm (0.8 x 4.7 x 4.5 inch) , housing type B2
Mounting		on 35 mm DIN mounting rail acc. to EN 60715:2001
Data for application in connection with hazardous areas		
EU-Type Examination Certificate		PTB 00 ATEX 2035
Marking		⟨Ex⟩ II (1) G [Ex ia] IIC ⟨Ex⟩ II (1) D [Ex ia] IIIC
Input		Ex ia IIC, Ex ia IIIC
Voltage	U_o	10.5 V
Current	I_o	13 mA
Power	P_o	34 mW (linear characteristic)
Supply		
Maximum safe voltage	U_m	40 V DC (Attention! The rated voltage can be lower.)
Type of protection [EEx ia and EEx ib]		
Output		

Release date 2019-01-25 09:38 Date of issue 2019-01-25 180997_eng.xml

Maximum safe voltage U_m	40 V DC (Attention! The rated voltage can be lower.)
Certificate	TÜV 99 ATEX 1499 X
Marking	Ⓔx II 3G Ex nA II T4
Galvanic isolation	
Input/Output	safe electrical isolation acc. to IEC/EN 60079-11, voltage peak value 375 V
Input/power supply	safe electrical isolation acc. to IEC/EN 60079-11, voltage peak value 375 V
Directive conformity	
Directive 2014/34/EU	EN 60079-0:2012+A11:2013 , EN 60079-11:2012 , EN 60079-15:2010 , EN 50303:2000
International approvals	
FM approval	
Control drawing	116-0035
CSA approval	
Control drawing	116-0047
IECEx approval	
IECEx certificate	IECEx PTB 05.0011
IECEx marking	[Ex ia] IIC , [Ex ia] I , [Ex ia] IIIC
General information	
Supplementary information	Observe the certificates, declarations of conformity, instruction manuals, and manuals where applicable. For information see
Accessories	
Optional accessories	- power feed module KFD2-EB2(.R4A.B)(.SP) - universal power rail UPR-03(-M)(-S) - profile rail K-DUCT-BU(-UPR-03)

Release date 2019-01-25 09:38 Date of issue 2019-01-25 180997_eng.xml

Configuration

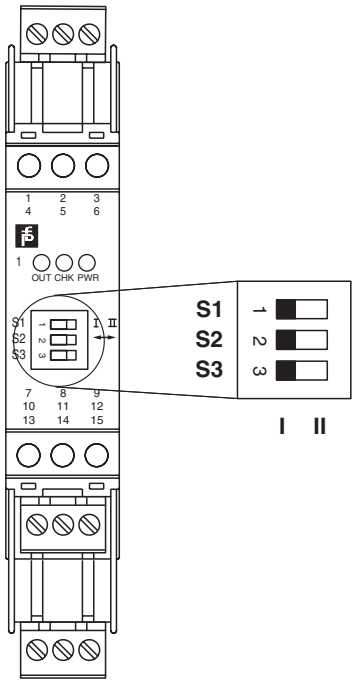

Switch position

S	Function		Position
1	Mode of operation Output I active	with high input current	I
		with low input current	II
2	Assignment Output II	switching state like output I	I
		fault signal output (passive if fault)	II
3	Line fault detection	ON	I
		OFF	II

Operating status

Control circuit	Input signal
Initiator high impedance/ contact opened	low input current
Initiator low impedance/ contact closed	high input current
Lead breakage, lead short-circuit	Line fault

Factory settings: switch 1, 2 and 3 in position I

Release date 2019-01-25 09:38 Date of issue 2019-01-25 180997_eng.xml