



CE cULus LISTED IO-Link

Model Number

OBD800-R103-2EP-IO-V31

Diffuse mode sensor
with 4-pin, M8 x 1 connector

Features

- Miniature design with versatile mounting options
- Extended temperature range -40°C ... 60°C
- High degree of protection IP69K
- IO-link interface for service and process data

Product information

The R103 series miniature optical sensors are the first devices of their kind to offer an end-to-end solution in a small single standard design — from thru-beam sensor through to a distance measurement device. As a result of this design, the sensors are able to perform practically all standard automation tasks.
The entire series enables sensors to communicate via IO-Link.
The DuraBeam laser sensors are durable and can be used in the same way as a standard sensor.
The use of Multi Pixel Technology gives the standard sensors a high level of flexibility and enables them to adapt more effectively to their operating environment.

Dimensions

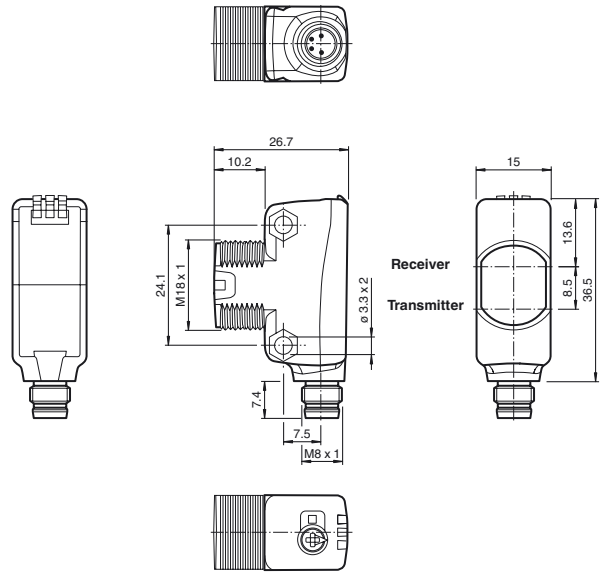

Electrical connection

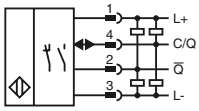

Pinout



Wire colors in accordance with EN 60947-5-2

1	BN	(brown)
2	WH	(white)
3	BU	(blue)
4	BK	(black)

Indicators/operating means

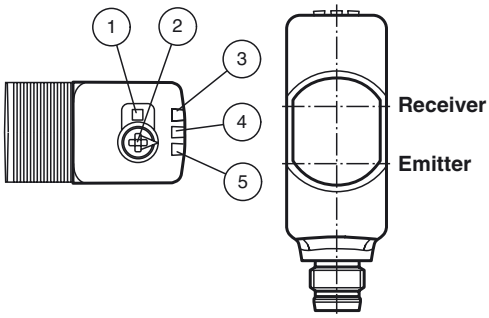

1	Light-on/dark-on changeover switch
2	Sensivity adjuster
3	Operating indicator / dark on
4	Function indicator
5	Operating indicator / light on

Release date: 2018-06-08 14:20 Date of issue: 2018-06-08 267075-100257_eng.xml

Technical data

General specifications		
Detection range		2 ... 800 mm
Detection range min.		20 ... 40 mm
Detection range max.		5 ... 800 mm
Adjustment range		40 ... 800 mm
Reference target		standard white, 100 mm x 100 mm
Light source		LED
Light type		modulated visible red light
LED risk group labelling		exempt group
Diameter of the light spot		approx. 55 mm at a distance of 800 mm
Angle of divergence		3.7 °
Ambient light limit		EN 60947-5-2
Functional safety related parameters		
$MTTF_d$		724 a
Mission Time (T_M)		20 a
Diagnostic Coverage (DC)		0 %
Indicators/operating means		
Operation indicator		LED green: constantly on - power on flashing (4Hz) - short circuit flashing with short break (1 Hz) - IO-Link mode
Function indicator		LED yellow: constantly on - object detected constantly off - object not detected
Control elements		Light-on/dark-on changeover switch
Control elements		sensitivity adjustment
Electrical specifications		
Operating voltage	U_B	10 ... 30 V DC
Ripple		max. 10 %
No-load supply current	I_0	< 25 mA at 24 V supply voltage
Protection class		III
Interface		
Interface type		IO-Link (via C = pin 4)
Transfer rate		COM 2 (38.4 kBaud)
IO-Link Revision		1.1
Min. cycle time		2.3 ms
Process data witdh		Process data input 1 Bit Process data output 2 Bit
SIO mode support		yes
Device ID		0x110103 (1114371)
Compatible master port type		A
Output		
Switching type		The switching type of the sensor is adjustable. The default setting is: C/Q - Pin4: NPN normally open / light-on, PNP normally closed / dark-on, IO-Link /Q - Pin2: NPN normally closed / dark-on, PNP normally open / light-on
Signal output		2 push-pull (4 in 1)outputs, short-circuit protected, reverse polarity protected, overvoltage protected
Switching voltage		max. 30 V DC
Switching current		max. 100 mA , resistive load
Usage category		DC-12 and DC-13
Voltage drop	U_d	≤ 1.5 V DC
Switching frequency	f	1000 Hz
Response time		0.5 ms
Conformity		
Communication interface		IEC 61131-9
Product standard		EN 60947-5-2
Ambient conditions		
Ambient temperature		-40 ... 60 °C (-40 ... 140 °F)
Storage temperature		-40 ... 70 °C (-40 ... 158 °F)
Mechanical specifications		
Housing width		15 mm
Housing height		43.9 mm
Housing depth		26.7 mm
Degree of protection		IP67 / IP69 / IP69K
Connection		M8 x 1 connector, 4-pin
Material		
Housing		PC (Polycarbonate)
Optical face		PMMA
Mass		approx. 12 g
Approvals and certificates		
UL approval		E87056 , cULus Listed , class 2 power supply , type rating 1

Accessories

IO-Link-Master02-USB
IO-Link master, supply via USB port or separate power supply, LED indicators, M12 plug for sensor connection

OMH-R103-01
Mounting bracket

V31-GM-2M-PUR
Female cordset, M8, 4-pin, PUR cable

V31-WM-2M-PUR
Female cordset, M8, 4-pin, PUR cable

OMH-R101-Front
Mounting Clamp

OMH-R101
Mounting Clamp

OMH-4.1
Mounting Clamp

OMH-ML6
Mounting bracket

OMH-ML6-U
Mounting bracket

OMH-ML6-Z
Mounting bracket

Other suitable accessories can be found at

Release date: 2018-06-08 14:20 Date of issue: 2018-06-08 267075-100257_eng.xml

Curves/Diagrams

Characteristic response curve

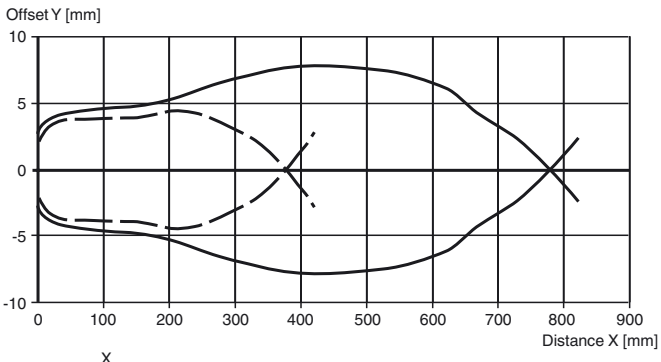

Relative received light strength

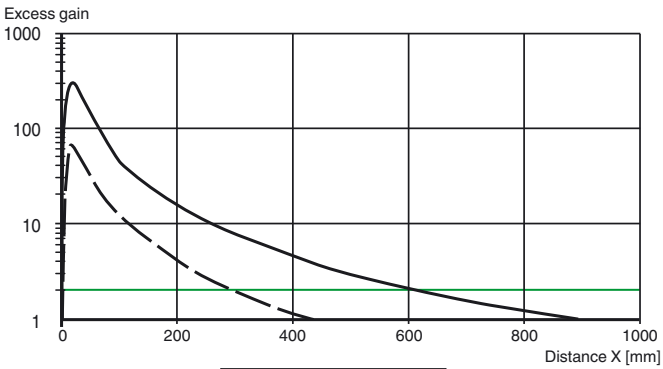

Detection ranges

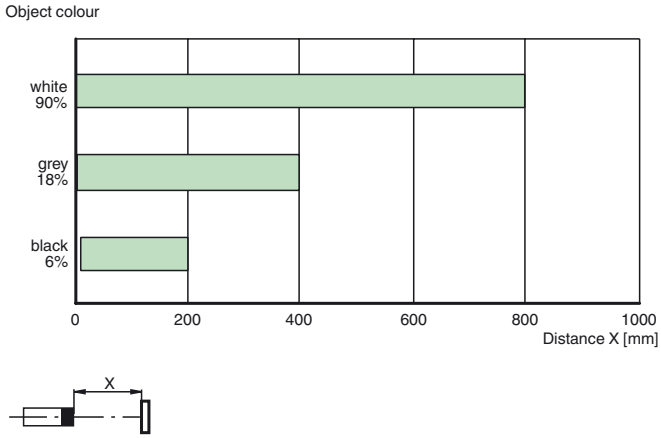

Functions and Operation

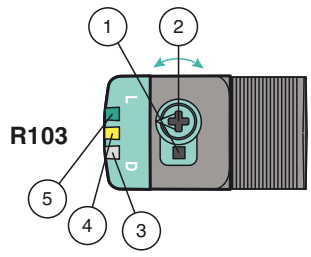

1 - Light-on / dark-on changeover switch
2 - Sensing range / sensitivity adjuster
3 - Operating indicator / dark on
4 - Signal indicator
5 - Operating indicator / light on

Release date: 2018-06-08 14:20 Date of issue: 2018-06-08 267075-100257_eng.xml

To unlock the adjustment functions turn the sensing range adjuster / sensitivity adjuster for more than 180 degrees.

Sensing Range/ Sensitivity

Turn sensing range / sensitivity adjuster clockwise to increase sensing range / sensitivity.

Turn sensing range / sensitivity adjuster counter clockwise to decrease sensing range / sensitivity.

If the end of the adjustment range is reached, the signal indicator starts flashing with 8 Hz.

Light-on / Dark-on Configuration

Press the light-on / dark-on changeover switch for more than 1 second (less than 4 seconds). The light-on / dark-on mode changes and the operating indicators are activated accordingly.

If you press the light-on / dark-on changeover switch for more than 4 seconds, the light-on /dark-on mode changes back to the original setting. On release of the light-on / dark-on changeover switch the current state is activated.

Restore Factory Settings

Press the light-on / dark-on changeover switch for more than 10 seconds (less than 30 seconds) until all LEDs turn off. On release of the light-on / dark-on changeover switch the signal indicator turns on. After 5 seconds the sensor resumes operation with factory default settings.

After 5 minutes of inactivity the sensing range / sensitivity adjustment is locked. In order to reactivate the sensing range / sensitivity adjustment, turn the sensing range / sensitivity adjuster for more than 180 degrees.

Release date: 2018-06-08 14:20 Date of issue: 2018-06-08 267075-100257_eng.xml