

## Model Number

**OBR6000-R103-2EP-IO-V31**

Retroreflective sensor
with 4-pin, M8 x 1 connector

## Features

- Miniature design with versatile mounting options
- Extended temperature range -40°C ... 60°C
- High degree of protection IP69K
- IO-link interface for service and process data

## Product information

The R103 series miniature optical sensors are the first devices of their kind to offer an end-to-end solution in a small single standard design — from thru-beam sensor through to a distance measurement device. As a result of this design, the sensors are able to perform practically all standard automation tasks.
The entire series enables sensors to communicate via IO-Link.
The DuraBeam laser sensors are durable and can be used in the same way as a standard sensor.
The use of Multi Pixel Technology gives the standard sensors a high level of flexibility and enables them to adapt more effectively to their operating environment.

## Dimensions

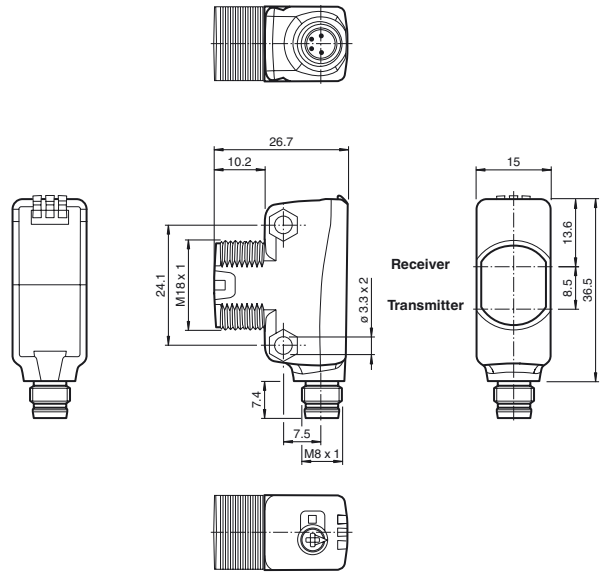


## Electrical connection

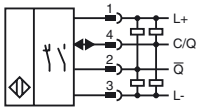


## Pinout




Wire colors in accordance with EN 60947-5-2

| | | |
|---|---|---|
| 1 | BN | (brown) |
| 2 | WH | (white) |
| 3 | BU | (blue) |
| 4 | BK | (black) |

## Indicators/operating means

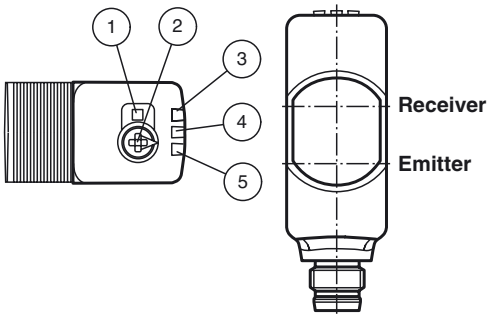


| | |
|---|---|
| 1 | Light-on/dark-on changeover switch |
| 2 | Sensivity adjuster |
| 3 | Operating indicator / dark on |
| 4 | Function indicator |
| 5 | Operating indicator / light on |

Release date: 2018-06-08 14:14 Date of issue: 2018-09-19 267075-100275_eng.xml

## Technical data

| | | |
|---|---|---|
| **General specifications** | | |
| Effective detection range | | 0 ... 6 m |
| Reflector distance | | 0.03 ... 6 m |
| Threshold detection range | | 8 m |
| Reference target | | H85-2 reflector |
| Light source | | LED |
| Light type | | modulated visible red light |
| LED risk group labelling | | exempt group |
| Polarization filter | | yes |
| Diameter of the light spot | | approx. 65 mm at a distance of 1 m |
| Angle of divergence | | 3.7 ° |
| Ambient light limit | | EN 60947-5-2 |
| **Functional safety related parameters** | | |
| $MTTF_d$ | | 724 a |
| Mission Time ($T_M$) | | 20 a |
| Diagnostic Coverage (DC) | | 0 % |
| **Indicators/operating means** | | |
| Operation indicator | | LED green:<br>constantly on - power on<br>flashing (4Hz) - short circuit<br>flashing with short break (1 Hz) - IO-Link mode |
| Function indicator | | Yellow LED:<br>Permanently lit - light path clear<br>Permanently off - object detected<br>Flashing (4 Hz) - insufficient operating reserve |
| Control elements | | Light-on/dark-on changeover switch |
| Control elements | | sensitivity adjustment |
| Parameterization indicator | | IO link communication: green LED goes out briefly (1 Hz) |
| **Electrical specifications** | | |
| Operating voltage | $U_B$ | 10 ... 30 V DC |
| Ripple | | max. 10 % |
| No-load supply current | $I_0$ | < 25 mA at 24 V supply voltage |
| Protection class | | III |
| **Interface** | | |
| Interface type | | IO-Link ( via C/Q = pin 4 ) |
| Transfer rate | | COM 2 (38.4 kBaud) |
| IO-Link Revision | | 1.1 |
| Min. cycle time | | 2.3 ms |
| Process data witdh | | Process data input 2 Bit<br>Process data output 2 Bit |
| SIO mode support | | yes |
| Device ID | | 0x110204 (1114628) |
| Compatible master port type | | A |
| **Output** | | |
| Switching type | | The switching type of the sensor is adjustable. The default setting is:<br>C/Q - Pin4: NPN normally open / dark-on, PNP normally closed / light-on, IO-Link<br>/Q - Pin2: NPN normally closed / light-on, PNP normally open / dark-on |
| Signal output | | 2 push-pull (4 in 1)outputs, short-circuit protected, reverse polarity protected, overvoltage protected |
| Switching voltage | | max. 30 V DC |
| Switching current | | max. 100 mA , resistive load |
| Usage category | | DC-12 and DC-13 |
| Voltage drop | $U_d$ | ≤ 1.5 V DC |
| Switching frequency | f | 1000 Hz |
| Response time | | 0.5 ms |
| **Conformity** | | |
| Communication interface | | IEC 61131-9 |
| Product standard | | EN 60947-5-2 |
| **Ambient conditions** | | |
| Ambient temperature | | -40 ... 60 °C (-40 ... 140 °F) |
| Storage temperature | | -40 ... 70 °C (-40 ... 158 °F) |
| **Mechanical specifications** | | |
| Housing width | | 15 mm |
| Housing height | | 43.9 mm |
| Housing depth | | 26.7 mm |
| Degree of protection | | IP67 / IP69 / IP69K |
| Connection | | M8 x 1 connector, 4-pin |
| Material | | |
| Housing | | PC (Polycarbonate) |
| Optical face | | PMMA |
| Mass | | approx. 12 g |

## Accessories

**IO-Link-Master02-USB**
IO-Link master, supply via USB port or separate power supply, LED indicators, M12 plug for sensor connection

**OMH-R103-01**
Mounting bracket

**V31-GM-2M-PUR**
Female cordset, M8, 4-pin, PUR cable

**V31-WM-2M-PUR**
Female cordset, M8, 4-pin, PUR cable

**OFR-100/100**
Reflective tape 100 mm x 100 mm

**REF-H33**
Reflector with screw fixing

**REF-H50**
Reflector, rectangular 51 mm x 61 mm, mounting holes, fixing strap

**REF-H85-2**
Reflector, rectangular 84.5 mm x 84.5 mm, mounting holes

**REF-VR10**
Reflector, rectangular 60 mm x 19 mm, mounting holes

**OMH-R101-Front**
Mounting Clamp

**OMH-R101**
Mounting Clamp

**OMH-4.1**
Mounting Clamp

**OMH-ML6**
Mounting bracket

**OMH-ML6-U**
Mounting bracket

**OMH-ML6-Z**
Mounting bracket

Other suitable accessories can be found at

Release date: 2018-06-08 14:14 Date of issue: 2018-09-19 267075-100275_eng.xml



Refer to “General Notes Relating to Pepperl+Fuchs Product Information”.

PEPPERL+FUCHS SENSING YOUR NEEDS

**Approvals and certificates**

| | |
|---|---|
| UL approval | E87056 , cULus Listed , class 2 power supply , type rating 1 |

## Curves/Diagrams

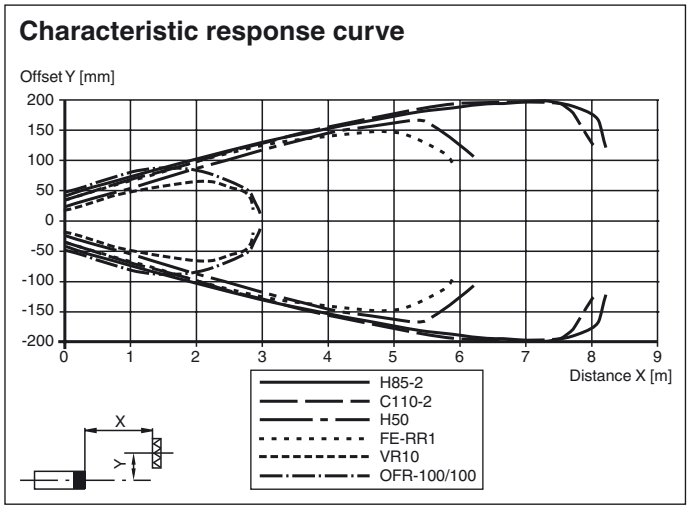


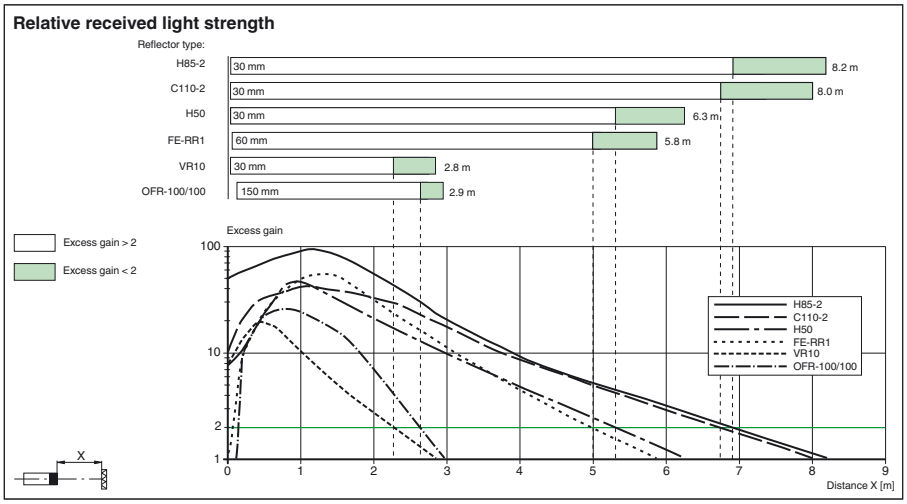


## Functions and Operation

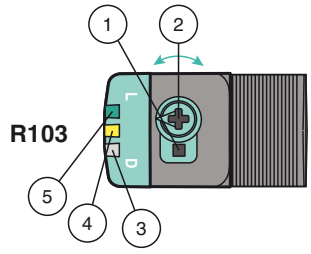


1 - Light-on / dark-on changeover switch
2 - Sensing range / sensitivity adjuster
3 - Operating indicator / dark on
4 - Signal indicator
5 - Operating indicator / light on

To unlock the adjustment functions turn the sensing range adjuster / sensitivity adjuster for more than 180 degrees.

### Sensing Range/ Sensitivity

Turn sensing range / sensitivity adjuster clockwise to increase sensing range / sensitivity.

Turn sensing range / sensitivity adjuster counter clockwise to decrease sensing range / sensitivity.

If the end of the adjustment range is reached, the signal indicator starts flashing with 8 Hz.

### Light-on / Dark-on Configuration

Press the light-on / dark-on changeover switch for more than 1 second (less than 4 seconds). The light-on / dark-on mode changes and the operating indicators are activated accordingly.

If you press the light-on / dark-on changeover switch for more than 4 seconds, the light-on /dark-on mode changes back to the original setting. On release of the light-on / dark-on changeover switch the current state is activated.

Release date: 2018-06-08 14:14 Date of issue: 2018-09-19 267075-100275_eng.xml

### Restore Factory Settings

Press the light-on / dark-on changeover switch for more than 10 seconds (less than 30 seconds) until all LEDs turn off. On release of the light-on / dark-on changeover switch the signal indicator turns on. After 5 seconds the sensor resumes operation with factory default settings.

After 5 minutes of inactivity the sensing range / sensitivity adjustment is locked. In order to reactivate the sensing range / sensitivity adjustment, turn the sensing range / sensitivity adjuster for more than 180 degrees.

Release date: 2018-06-08 14:14 Date of issue: 2018-09-19 267075-100275_eng.xml