

Model Number

PMI80-F90-3EP-IO-V15

Features

- **Parameterization and diagnosis via IO-Link**
- **Measuring range 0 ... 80 mm**
- **Parameterisable measuring range**
- **3 Push-pull outputs**
- **Switch points programmable via IO-Link**

Application

Attention!
If the sensor is supplied via an IO-Link-Master, ensure that the sum of the no-load supply current and operating currents of all sensor outputs does not exceed the maximum current the IO-Link-Master can supply.

Accessories

BT-F90-W
Damping element for sensors of type F90, F112, and F166; side hole

MH-F90
Mounting bracket for mounting of F90 sensors

V15-G-2M-PVC
Female cordset, M12, 5-pin, PVC cable

V15-W-2M-PVC
Female cordset, M12, 5-pin, PVC cable

Technical Data

General specifications		
Switching element function		3 switch outputs, programmable
Object distance		0.5 ... 3 mm , recommended: 1.5 mm
Measurement range		0 ... 80 mm
Linearity range		1 ... 79 mm
Nominal ratings		
Operating voltage	U_B	12 ... 30 V DC
Reverse polarity protection		reverse polarity protected
Linearity error		within measuring range: ± 0.8 mm within linearity range: ± 0.4 mm
Repeat accuracy	R	± 0.1 mm
Resolution		50 µm
Temperature drift		± 0.5 mm (-25 °C ... 70 °C)
No-load supply current	I_0	≤ 40 mA
Operating voltage indicator		LED green
Functional safety related parameters		
$MTTF_d$		311 a
Mission Time (T_M)		20 a
Diagnostic Coverage (DC)		0 %
Indicators/operating means		
LED S1		switching state Switching output 1
LED S2		switching state Switching output 2
LED S3		switching state, Switching output 3
LED STATUS		Status display LED, green/red (Power on, communication/error, missing damping element)
Interface		
Interface type		IO-Link (via C/Q = Pin 4)
Device profile		Smart Sensor
Transfer rate		COM 2 (38.4 kBaud)
Value range		0000h ... 6400h
IO-Link Revision		1.1
Min. cycle time		2.3 ms
Process data witdh		Process data input: 16 Bit Process data output: none
SIO mode support		yes
Device ID		0x200302 (2097922)
Compatible master port type		A
Switching output		
Output type		3 push-pull outputs (can be parameterized), short-circuit-proof, reverse polarity protection , overvoltage protected
Operating current	I_L	≤ 100 mA / output
Switching window		± 1 mm
Switching hysteresis		0.2 mm
Voltage drop		≤ 3 V
Short-circuit protection		pulsing
Ambient conditions		
Ambient temperature		-25 ... 85 °C (-13 ... 185 °F)
Mechanical specifications		
Connection type		5-pin, M12 x 1 connector
Degree of protection		IP67 / IP69K
Material		
Housing		PBT, stainless steel 1.4571 , brass, nickel-plated
Target		mild steel, e. g. 1.0037, SR235JR (formerly St37-2)
Mass		83 g
Compliance with standards and directives		
Standard conformity		
Standards		EN 60947-5-2:2007 EN 60947-5-2/A1:2012 IEC 60947-5-2:2007 IEC 60947-5-2 AMD 1:2012 IEC 61131-9:2013 EN 61131-9:2013
Approvals and certificates		
UL approval		cULus Listed, Class 2 Power Source, Type 1 enclosure

Release date: 2017-09-07 14:17 Date of issue: 2018-01-18 231921_eng.xml

Dimensions

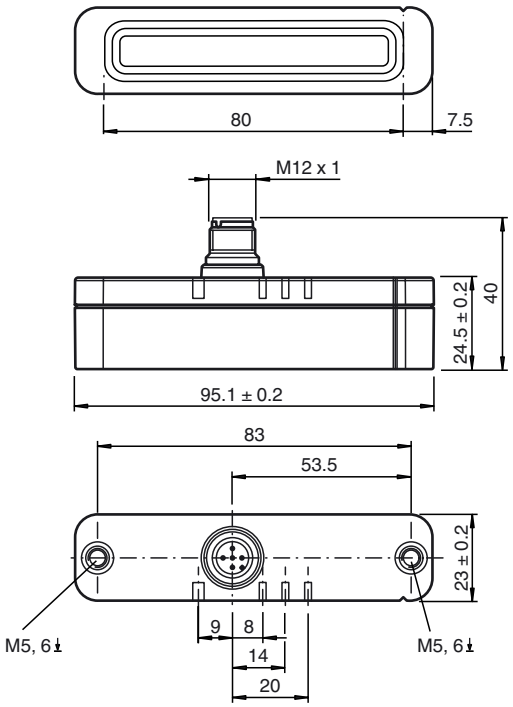

Electrical Connection

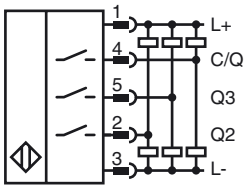

Pinout

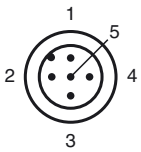

Wire colors in accordance with EN 60947-5-2

1	BN	(brown)
2	WH	(white)
3	BU	(blue)
4	BK	(black)
5	GY	(gray)

Release date: 2017-09-07 14:17 Date of issue: 2018-01-18 231921_eng.xml

Additional Information

dimensions for the target object:

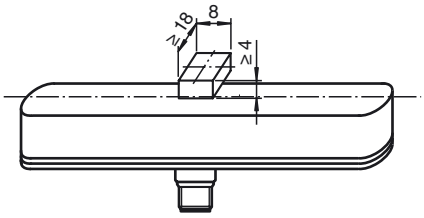

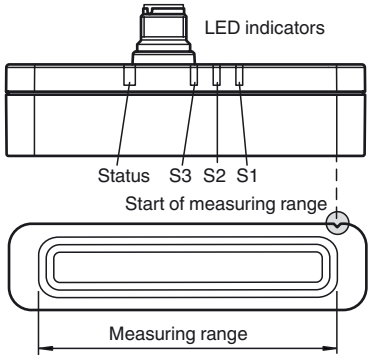

Release date: 2017-09-07 14:17 Date of issue: 2018-01-18 231921_eng.xml