Features

- 2-channel signal conditioner
- 230 V AC supply
- Level sensing input
- Adjustable range 1 kΩ ... 150 kΩ
- Relay contact output
- Adjustable time delay up to 10 s
- Minimum/maximum control
- Line fault detection (LFD)

Function

This signal conditioner provides the AC measuring voltage for the level sensing electrodes.

Once the measured medium reaches the electrodes, the unit reacts by energizing a form C changeover relay contact.

The module is voltage and temperature stabilized and guarantees a defined switching characteristic.

It can be used for on/off control or minimum/maximum control. A signal delay feature is available and is adjustable between 0.5 s and 10 s.

This module can also monitor the field circuit for lead breakage (LB). LB is indicated by a red LED. This function can be deactivated with DIP switches.

Application

The device is equipped with lead breakage detection (current free relay in event of failure). For this purpose, the enclosed 430 kΩ resistance must be switched between the maximum and reference electrode. This function can be deactivated by DIP switches.

Assembly

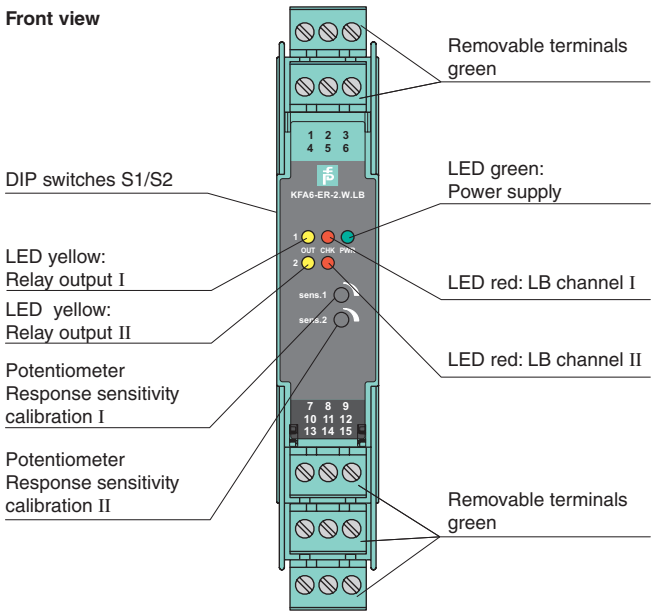

CE

Connection

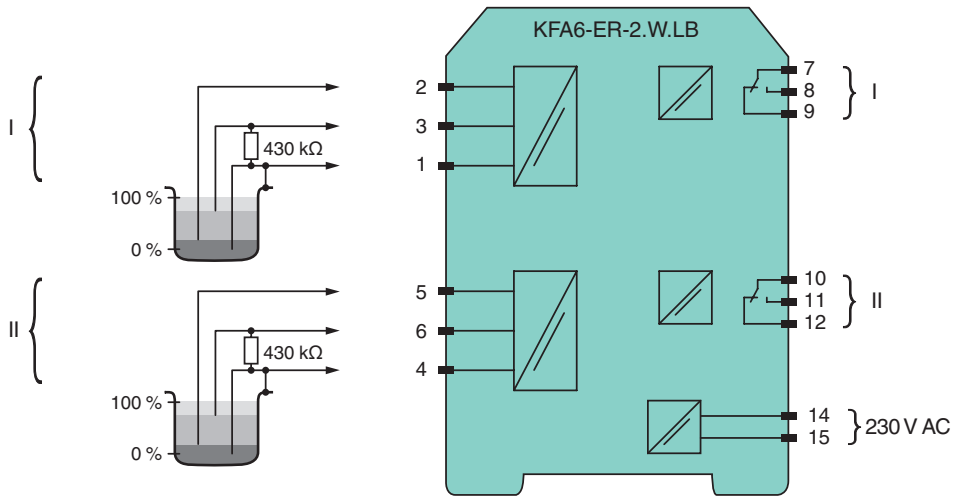

Release date 2012-09-26 14:52 Date of issue 2015-02-16 115620_eng.xml

General specifications		
Signal type		Digital Input
Supply		
Connection		terminals 14, 15
Rated voltage	U_n	207 ... 253 V AC, 45 ... 65 Hz
Rated current	I_n	≤ 7 mA
Power consumption		< 1.2 W
Input		
Connection		terminals 1, 4 (mass), 2, 5 (min), 3, 6 (max)
Control input		min./max. control system: terminals 1, 2, 3; 4, 5. 6 on/off control system: terminals 1, 3; 4, 6
Response sensitivity		1 ... 150 kΩ , adjustable via potentiometer
Output		
Connection		terminals 7, 8, 9; 10, 11, 12
Switching power		max. 192 W , 2000 VA
Output		relay
Contact loading		253 V AC/2 A/cos ϕ > 0.7; 40 V DC/2 A resistive load
Time constant for signal damping		0.5 s, 2 s, 5 s, 10 s
Electrical isolation		
Input/Output		basic insulation according to EN 50178, rated insulation voltage 253 V_{eff}
Input/power supply		basic insulation according to EN 50178, rated insulation voltage 253 V_{eff}
Output/power supply		basic insulation according to EN 50178, rated insulation voltage 253 V_{eff}
Directive conformity		
Electromagnetic compatibility		
Directive 2004/108/EC		EN 61326-1:2006
Low voltage		
Directive 2006/95/EC		EN 50178:1997
Conformity		
Insulation coordination		EN 50178:1997
Electrical isolation		EN 50178:1997
Electromagnetic compatibility		NE 21:2006
Degree of protection		IEC 60529:2001
Ambient conditions		
Ambient temperature		-20 ... 60 °C (-4 ... 140 °F)
Mechanical specifications		
Degree of protection		IP20
Connection		screw connection, max. 2.5 mm^2
Mass		approx. 150 g
Dimensions		20 x 119 x 115 mm (0.8 x 4.7 x 4.5 in) , housing type B2
Mounting		on 35 mm DIN mounting rail acc. to EN 60715:2001
General information		
Supplementary information		Statement of Conformity, Declaration of Conformity, Attestation of Conformity and instructions have to be observed where applicable. For information see www.pepperl-fuchs.com.

Release date 2012-09-26 14:52 Date of issue 2015-02-16 115620_eng.xml

Configuration

DIP switches function on side of device

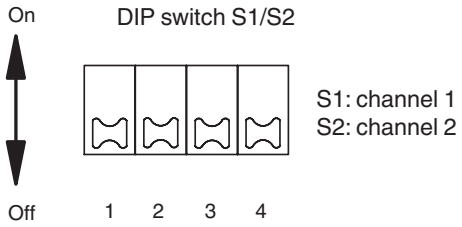

Switches	Position	Function
1	Off On	open circuit current closed circuit current
2	Off On	LB deactivated LB activated

Switch 3	Switch 4	Time constant for signal damping
Off Off	Off On	0.5 s 2 s
On On	Off On	5 s 10 s

- Open circuit current principle: In open circuit current principle the relay becomes active when the limit is reached.
- Closed circuit current principle: In closed circuit current principle, the relay is activated when power is applied. The relay is deactivated when the limit is reached.

Release date 2012-09-26 14:52 Date of issue 2015-02-16 115620_eng.xml