Features

- 1-channel isolated barrier
- 230 V AC supply
- Dry contact or NAMUR inputs
- Relay contact output
- Line fault detection (LFD)
- Reversible mode of operation
- Up to SIL 2 acc. to IEC 61508/IEC 61511

Function

This isolated barrier is used for intrinsic safety applications. It transfers digital signals (NAMUR sensors/mechanical contacts) from a hazardous area to a safe area.

The proximity sensor or switch controls a form C changeover relay contact for the safe area load. The barrier output changes state when the input signal changes state. The normal output state can be reversed using switch S1. Switch S3 is used to enable or disable line fault detection of the field circuit.

During an error condition, relays revert to their de-energized state and LEDs indicate the fault according to NAMUR NE44.

Assembly

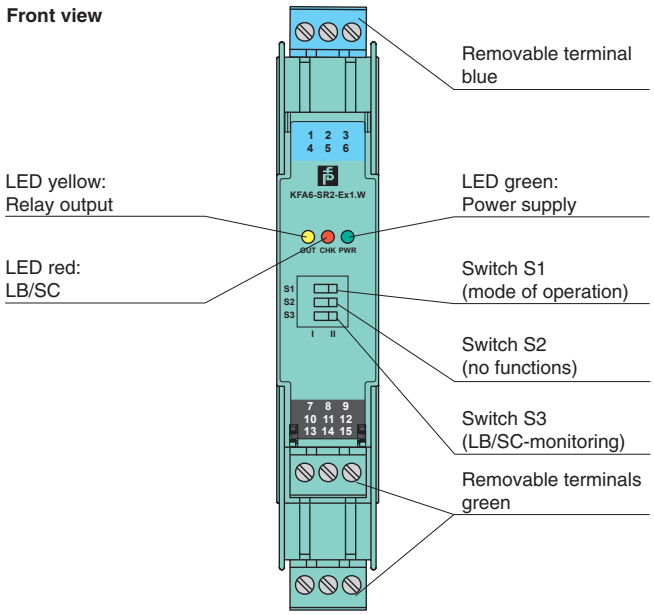

Connection

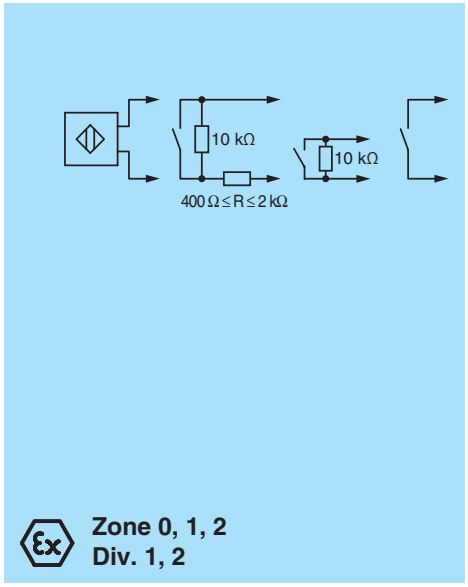

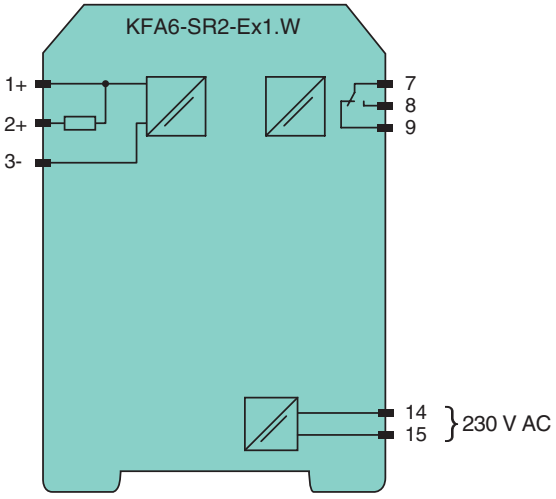

Release date 2019-01-24 13:57 Date of issue 2019-01-24 103374_eng.xml

General specifications		
Signal type		Digital Input
Functional safety related parameters		
Safety Integrity Level (SIL)		SIL 2
Supply		
Connection		terminals 14, 15
Rated voltage	U_r	207 ... 253 V AC, 45 ... 65 Hz
Power dissipation		1 W
Power consumption		≤ 1 W
Input		
Connection side		field side
Connection		terminals 1+, 2+, 3-
Rated values		acc. to EN 60947-5-6 (NAMUR)
Open circuit voltage/short-circuit current		approx. 8 V DC / approx. 8 mA
Switching point/switching hysteresis		1.2 ... 2.1 mA / approx. 0.2 mA
Line fault detection		breakage I ≤ 0.1 mA , short-circuit I > 6 mA
Pulse/Pause ratio		≥ 20 ms / ≥ 20 ms
Output		
Connection side		control side
Connection		terminals 7, 8, 9
Output		signal ; relay
Contact loading		253 V AC/2 A/cos ϕ > 0.7; 126.5 V AC/4 A/cos ϕ > 0.7; 40 V DC/2 A resistive load
Energized/De-energized delay		approx. 20 ms / approx. 20 ms
Mechanical life		10^7 switching cycles
Transfer characteristics		
Switching frequency		< 10 Hz
Galvanic isolation		
Input/Output		reinforced insulation according to IEC/EN 61010-1, rated insulation voltage 300 V_{eff}
Input/power supply		reinforced insulation according to IEC/EN 61010-1, rated insulation voltage 300 V_{eff}
Output/power supply		reinforced insulation according to IEC/EN 61010-1, rated insulation voltage 300 V_{eff}
Indicators/settings		
Display elements		LEDs
Labeling		space for labeling at the front
Directive conformity		
Electromagnetic compatibility		
Directive 2014/30/EU		EN 61326-1:2013 (industrial locations)
Low voltage		
Directive 2014/35/EU		EN 61010-1:2010
Conformity		
Electromagnetic compatibility		NE 21:2006
Degree of protection		IEC 60529:2001
Input		EN 60947-5-6:2000
Ambient conditions		
Ambient temperature		-20 ... 60 °C (-4 ... 140 °F)
Mechanical specifications		
Degree of protection		IP20
Connection		screw terminals
Mass		approx. 150 g
Dimensions		20 x 119 x 115 mm (0.8 x 4.7 x 4.5 inch) , housing type B2
Mounting		on 35 mm DIN mounting rail acc. to EN 60715:2001
Data for application in connection with hazardous areas		
EU-Type Examination Certificate		PTB 00 ATEX 2081
Marking		⟨Ex⟩ II (1)G [Ex ia Ga] IIC ⟨Ex⟩ II (1)D [Ex ia Da] IIIC ⟨Ex⟩ I (M1) [Ex ia Ma] I
Input		Ex ia
Voltage	U_o	10.6 V
Current	I_o	19.1 mA
Power	P_o	51 mW (linear characteristic)
Supply		
Maximum safe voltage	U_m	253 V AC (Attention! U_m is no rated voltage.)
Output		
Contact loading		253 V AC/2 A/cos ϕ > 0.7; 126.5 V AC/4 A/cos ϕ > 0.7; 40 V DC/2 A resistive load
Maximum safe voltage	U_m	253 V AC (Attention! The rated voltage can be lower.)

Release date 2019-01-24 13:57 Date of issue 2019-01-24 103374_eng.xml

Galvanic isolation	
Input/Output	safe electrical isolation acc. to IEC/EN 60079-11, voltage peak value 375 V
Input/power supply	safe electrical isolation acc. to IEC/EN 60079-11, voltage peak value 375 V
Directive conformity	
Directive 2014/34/EU	EN 60079-0:2012+A11:2013 , EN 60079-11:2012
International approvals	
FM approval	
Control drawing	116-0035
UL approval	
Control drawing	116-0145
CSA approval	
Control drawing	116-0047
IECEx approval	IECEx PTB 11.0031
Approved for	[Ex ia Ga] IIC, [Ex ia Da] IIIC, [Ex ia Ma] I
General information	
Supplementary information	Observe the cer conformity, instruction manuals, and manuals where applicable. For information see

Release date 2019-01-24 13:57 Date of issue 2019-01-24 103374_eng.xml

Configuration

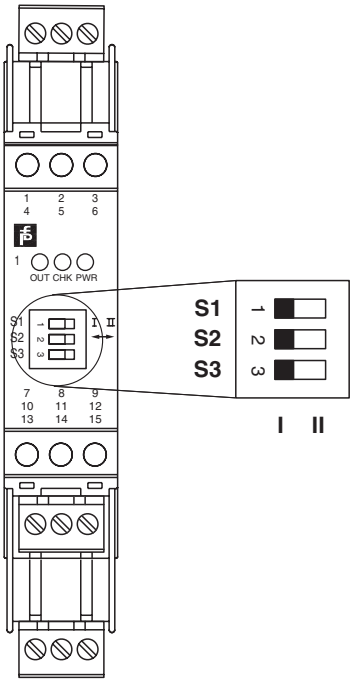

Switch position

S	Function		Position
1	Mode of operation Output I (relay) energized	with high input current	I
		with low input current	II
2	no function		
3	Line fault detection	ON	I
		OFF	II

Operating status

Control circuit	Input signal
Initiator high impedance/ contact opened	low input current
Initiator low impedance/ contact closed	high input current
Lead breakage, lead short-circuit	Line fault

Factory settings: switch 1, 2 and 3 in position I

Release date 2019-01-24 13:57 Date of issue 2019-01-24 103374_eng.xml

Maximum switching power of output contacts

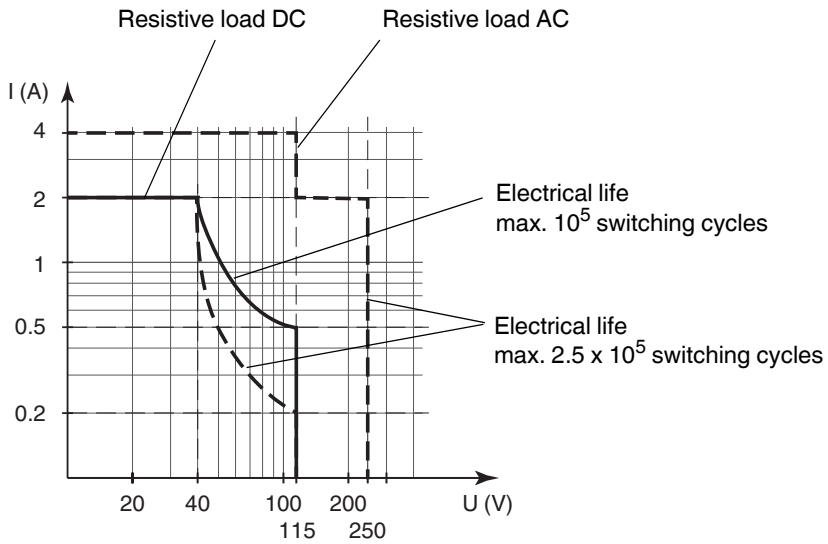

The maximum number of switching cycles is depending on the electrical load and may be higher when reduced currents and voltages are applied.

Release date 2019-01-24 13:57 Date of issue 2019-01-24 103374_eng.xml