Features

- 1-channel isolated barrier
- 230 V AC supply
- Dry contact or NAMUR inputs
- Relay contact output
- Fault relay contact output
- Line fault detection (LFD)
- Reversible mode of operation
- Up to SIL2 acc. to IEC 61508/IEC 61511

Function

This isolated barrier is used for intrinsic safety applications. It transfers digital signals (NAMUR sensors/mechanical contacts) from a hazardous area to a safe area.

The proximity sensor or switch controls a form C changeover relay contact for the safe area load. The normal output state can be reversed using switch S1. Switch S2 allows output II to be switched between a signal output or an error message output. Switch S3 is used to enable or disable line fault detection of the field circuit.

During an error condition, the relays revert to their de-energized state and the LEDs indicate the fault according to NAMUR NE44.

Assembly

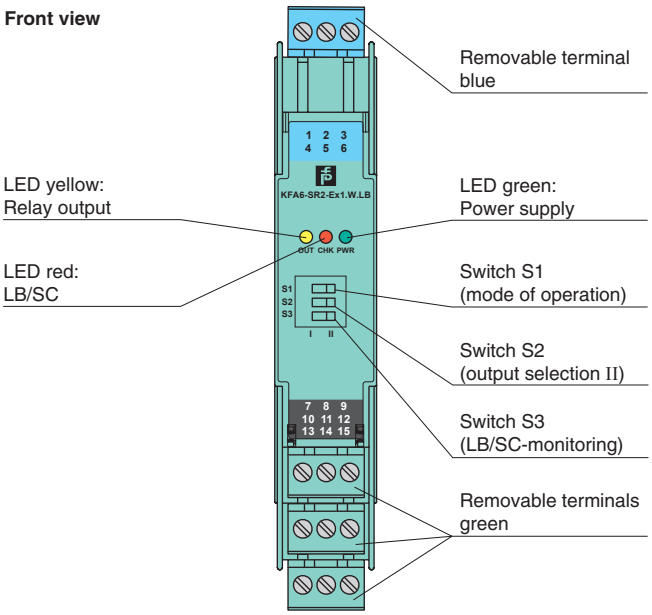

Connection

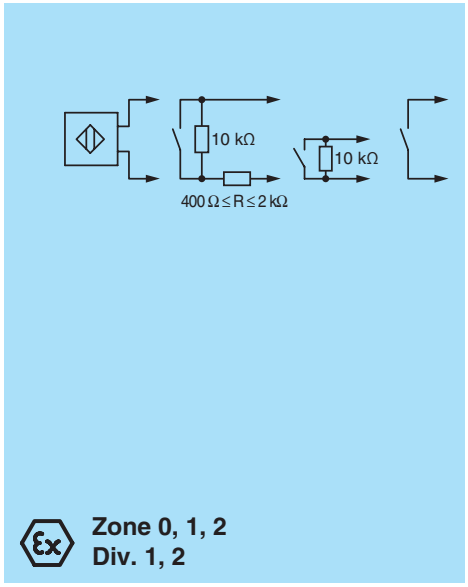

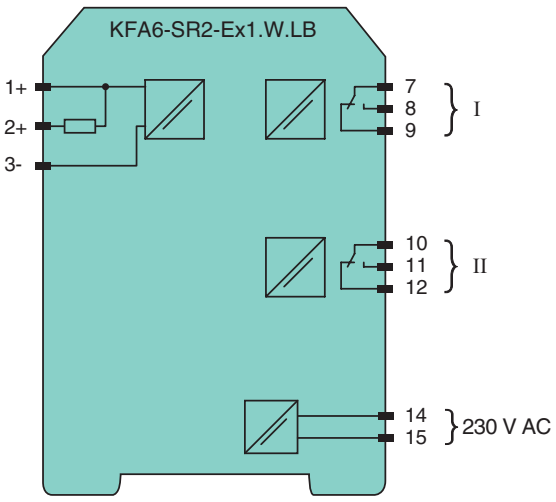

Release date 2012-09-19 14:52 Date of issue 2012-09-19 103375_eng.xml

Subject to reasonable modifications due to technical advances. Copyright Pepperl+Fuchs, Printed in Germany

General specifications		
Signal type		Digital Input
Supply		
Connection		terminals 14, 15
Rated voltage		207 ... 253 V AC, 45 ... 65 Hz
Power loss		1.2 W
Power consumption		≤ 1.3 W
Input		
Connection		terminals 1+, 2+, 3-
Rated values		acc. to EN 60947-5-6 (NAMUR)
Open circuit voltage/short-circuit current		approx. 8 V DC / approx. 8 mA
Switching point/switching hysteresis		1.2 ... 2.1 mA / approx. 0.2 mA
Line fault detection		breakage I ≤ 0.1 mA , short-circuit I > 6 mA
Pulse/Pause ratio		≥ 20 ms / ≥ 20 ms
Output		
Connection		output I: terminals 7, 8, 9 ; output II: terminals 10, 11, 12
Output I		signal ; relay
Output II		signal or error message ; relay
Contact loading		253 V AC/2 A/cos ϕ > 0.7; 126.5 V AC/4 A/cos ϕ > 0.7; 40 V DC/2 A resistive load
Energized/De-energized delay		approx. 20 ms / approx. 20 ms
Mechanical life		10^7 switching cycles
Transfer characteristics		
Switching frequency		≤ 10 Hz
Electrical isolation		
Input/Output		reinforced insulation according to IEC/EN 61010-1, rated insulation voltage 300 V_{eff}
Input/power supply		reinforced insulation according to IEC/EN 61010-1, rated insulation voltage 300 V_{eff}
Output/power supply		reinforced insulation according to IEC/EN 61010-1, rated insulation voltage 300 V_{eff}
Output/Output		reinforced insulation according to IEC/EN 61010-1, rated insulation voltage 300 V_{eff}
Directive conformity		
Electromagnetic compatibility		
Directive 2004/108/EC		EN 61326-1:2006
Low voltage		
Directive 2006/95/EC		EN 61010-1:2010
Conformity		
Electromagnetic compatibility		NE 21:2006
Protection degree		IEC 60529:2001
Input		EN 60947-5-6:2000
Ambient conditions		
Ambient temperature		-20 ... 60 °C (-4 ... 140 °F)
Mechanical specifications		
Protection degree		IP20
Mass		approx. 150 g
Dimensions		20 x 119 x 115 mm (0.8 x 4.7 x 4.5 in) , housing type B2
Mounting		on 35 mm DIN mounting rail acc. to EN 60715:2001
Data for application in connection with Ex-areas		
EC-Type Examination Certificate		PTB 00 ATEX 2081 , for additional certificates see www.pepperl-fuchs.com
Group, category, type of protection		⟨Ex⟩ II (1) G [Ex ia] IIC, II (1) D [Ex ia] IIIC
Input		[Ex ia] IIC, [Ex ia] IIIC
Voltage	U_o	10.6 V
Current	I_o	19.1 mA
Power	P_o	51 mW (linear characteristic)
Supply		
Maximum safe voltage	U_m	253 V AC (Attention! U_m is no rated voltage.)
Output		
Contact loading		253 V AC/2 A/cos ϕ > 0.7; 126.5 V AC/4 A/cos ϕ > 0.7; 40 V DC/2 A resistive load
Maximum safe voltage	U_m	253 V AC (Attention! The rated voltage can be lower.)
Electrical isolation		
Input/Output		safe electrical isolation acc. to IEC/EN 60079-11, voltage peak value 375 V
Input/power supply		safe electrical isolation acc. to IEC/EN 60079-11, voltage peak value 375 V
Directive conformity		
Directive 94/9/EC		EN 60079-0:2009, EN 60079-11:2007 , EN 61241-11:2006
International approvals		
FM approval		
Control drawing		116-0035

Release date 2012-09-19 14:52 Date of issue 2012-09-19 103375_eng.xml

Subject to reasonable modifications due to technical advances. Copyright Pepperl+Fuchs, Printed in Germany

UL approval	
Control drawing	116-0145
CSA approval	
Control drawing	116-0047
IECEx approval	IECEx PTB 11.0031
Approved for	[Ex ia] IIC , [Ex ia] IIIC , [Ex ia] I
General information	
Supplementary information	EC-Type Examination Certificate, Statement of Conformity, Declaration of Conformity, Attestation of Conformity and instructions have to be observed where applicable. For information see www.pepperl-fuchs.com.

Release date 2012-09-19 14:52 Date of issue 2012-09-19 103375_eng.xml

Subject to reasonable modifications due to technical advances. Copyright Pepperl+Fuchs, Printed in Germany

Configuration

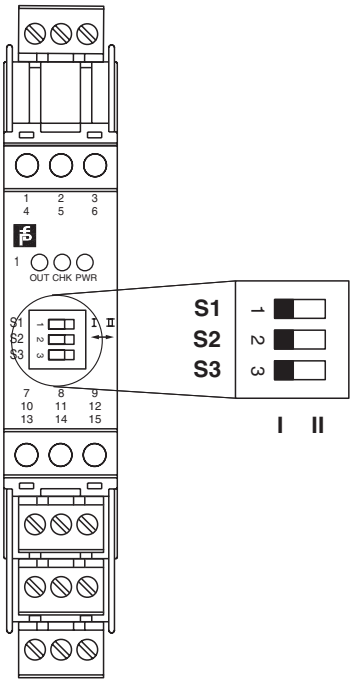

Switch position

S	Function		Position
1	Mode of operation Output I (relay) energized	with high input current	I
		with low input current	II
2	Assignment Output II (relay)	switching state like output I	I
		fault signal output (de-energized if fault)	II
3	Line fault detection	ON	I
		OFF	II

Operating status

Control circuit	Input signal
Initiator high impedance/ contact opened	low input current
Initiator low impedance/ contact closed	high input current
Lead breakage, lead short-circuit	Line fault

Factory settings: switch 1, 2 and 3 in position I

Release date 2012-09-19 14:52 Date of issue 2012-09-19 103375_eng.xml

Subject to reasonable modifications due to technical advances. Copyright Pepperl+Fuchs, Printed in Germany

Maximum switching power of output contacts

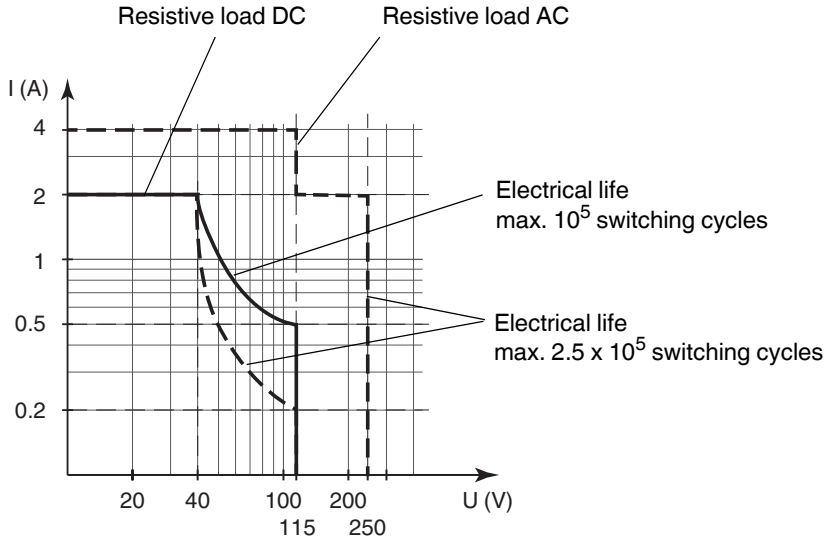

The maximum number of switching cycles is depending on the electrical load and may be higher when reduced currents and voltages are applied.

Release date 2012-09-19 14:52 Date of issue 2012-09-19 103375_eng.xml

Subject to reasonable modifications due to technical advances. Copyright Pepperl+Fuchs, Printed in Germany