Features

- 1-channel isolated barrier
- 24 V DC supply (loop powered)
- Current or voltage input
- Output: 4 mA ... 20 mA
- Potentiometer or DIP switch selectable ranges
- Line fault detection (LFD)

Function

This isolated barrier is used for intrinsic safety applications. It converts a 2-wire voltage or current in the hazardous area to a 4 mA ... 20 mA signal in the safe area.

The device can be used to double signals in 20 mA measurement circuits due to the limited current signal input load of 50 Ω.

DIP switches and potentiometers make field calibration easy.

Since this isolator is loop-powered, use the technical data to verify that the proper voltage is available to the field devices.

Assembly

Front view

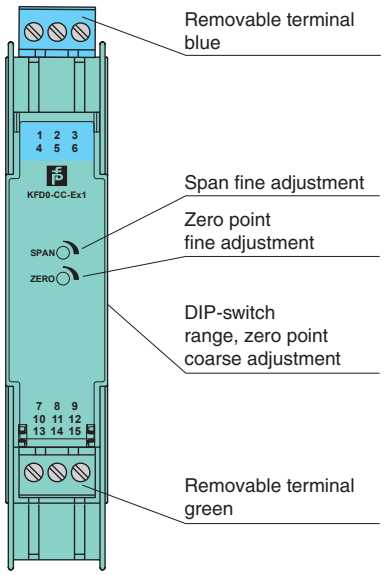

Connection

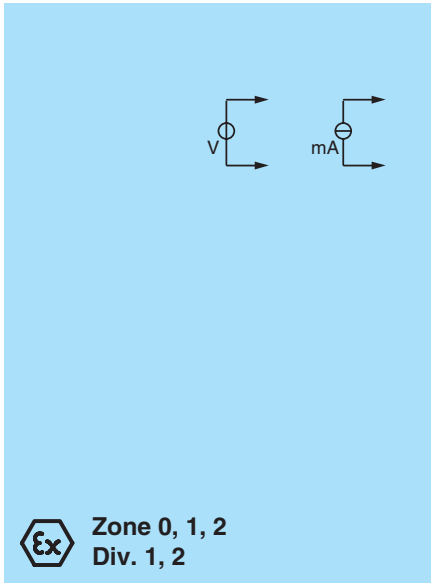

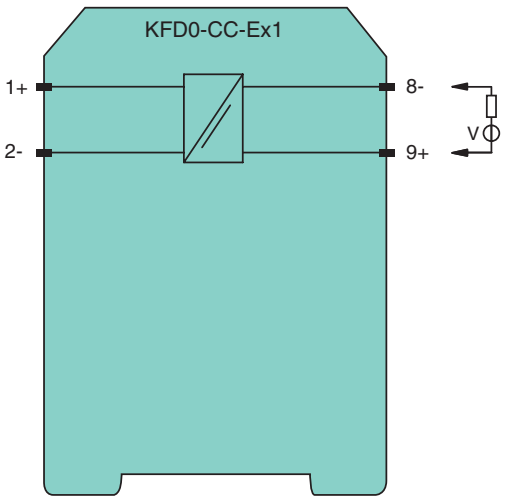

Release date 2010-02-02 18:16 Date of issue 2010-02-02 043690_ENG.xml

Subject to reasonable modifications due to technical advances. Copyright Pepperl+Fuchs, Printed in Germany

General specifications	
Signal type	Analog input
Supply	
Rated voltage	12 ... 35 V DC loop powered
Power loss	0.4 W
Input	
Connection	terminals 1+, 2-
Current range	0 ... 20 mA , load ≤ 50 Ω
Voltage range	0 ... 10 V , load ≥ 100 kΩ
Measuring current	
Output	
Connection	terminals 9+, 8-
Load	(U -12 V) / 0.02 A
Current output	4 ... 20 mA , limited to ≤ 35 mA
Fault signal	downscale ≤ 3 mA
Transfer characteristics	
Deviation	
After calibration	0.1 % of full-scale value
Temperature effect	span: 0.050 % of span /K ; zero point: 0.060 % of span /K
Linearisation	≤ 0.04 % of full-scale value
Influence of supply voltage	6.5 ppm/V
Rise time	250 ms
Electrical isolation	
Input/output	safe isolation according to EN 50178, rated insulation voltage 253 V_{eff}
Directive conformity	
Electromagnetic compatibility	
Directive 2004/108/EC	EN 61326-1:2006
Conformity	
Insulation coordination	EN 50178
Electrical isolation	EN 50178
Electromagnetic compatibility	NE 21
Protection degree	IEC 60529
Ambient conditions	
Ambient temperature	-20 ... 60 °C (253 ... 333 K)
Mechanical specifications	
Protection degree	IP20
Mass	approx. 100 g
Dimensions	20 x 119 x 115 mm (0.8 x 4.7 x 4.5 in) , housing type B2
Data for application in conjunction with hazardous areas	
EC-Type Examination Certificate	ZELM 00 ATEX 0034 , for additional certificates see www.pepperl-fuchs.com
Group, category, type of protection	⟨Ex⟩ II (1)GD [EEx ia] IIC
Input	EEx ia IIC
Voltage U_o	9.6 V
Current I_o	0.5 mA
Power P_o	1.1 mW linear characteristic
Output	
Safety maximum voltage U_m	60 V (Attention! The rated voltage can be lower.)
Statement of conformity	TÜV 01 ATEX 1777X , observe statement of conformity
Group, category, type of protection, temperature classification	⟨Ex⟩ II 3G Ex nA II T4
Electrical isolation	
Input/output	safe electrical isolation acc. to IEC/EN 60079-11, voltage peak value 375 V
Directive conformity	
Directive 94/9/EC	EN 50014, EN 50020 , EN 60079-0:2006, EN 60079-15:2005
International approvals	
CSA approval	
Control drawing	116-0132
General information	
Supplementary information	EC-Type Examination Certificate, Statement of Conformity, Declaration of Conformity, Attestation of Conformity and instructions have to be observed where applicable. For information see www.pepperl-fuchs.com.

Release date 2010-02-02 18:16 Date of issue 2010-02-02 043690_ENG.xml

Subject to reasonable modifications due to technical advances. Copyright Pepperl+Fuchs, Printed in Germany

Configuration

The device is delivered with the input signal set of 4 mA ... 20 mA.

Example

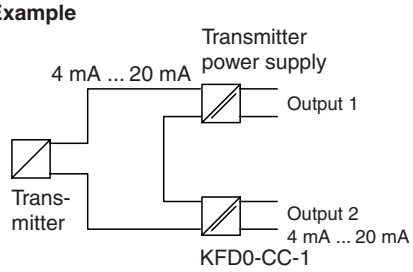

DIP switches function

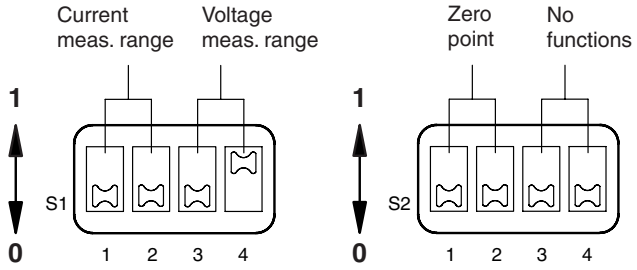

Measurement range	Switch S1 (range)				Switch S2 (zero point)			
	S1.1	S1.2	S1.3	S1.4	S2.1	S2.2	S2.3	S2.4
0 mA ... 20 mA	1	1	-	-	-	-	-	-
4 mA ... 20 mA	1	1	-	-	1	1	-	-
0 V ... 5 V	-	-	1	-	-	-	-	-
1 V ... 5 V	-	-	1	-	1	1	-	-
0 V ... 10 V	-	-	-	1	-	-	-	-
2 V ... 10 V	-	-	-	1	1	1	-	-

Adjustment instruction (example):

Input signal 0 mA ... 20 mA
Output signal 4 mA ... 20 mA

1. Set DIP switches S1.1 and S1.2 to the position 1. Set all other DIP switches to the position 0.
2. Set input to minimum value of 0 mA.
3. Adjust output, minimum zero point (4 mA).
4. Add maximum value of 20 mA.
5. Adjust output, range maximum value (20 mA)

Repeat steps 2. ... 5., until stable.

Release date 2010-02-02 18:16 Date of issue 2010-02-02 043690_ENG.xml

Subject to reasonable modifications due to technical advances. Copyright Pepperl+Fuchs, Printed in Germany