- 1-channel
- Control circuit EEx ia IIC
- Input frequency 0.001 Hz ... 5 kHz
- 2 relay outputs
- Each output individually parameterisable as trip value
- Start-up override
- Lead breakage (LB) monitoring and short-circuit (SC) monitoring
- Restart inhibit
- Bounce filter
- Parameterisation via control panel
- Up to SIL2 acc. to IEC 61508

24 V DC

KFD2-DWB-Ex1.D

Function

The speed monitor KF**-DWB-Ex1.D is able to survey the trip values.

The switch points of the two relays can be set freely (MIN/MAX alarm). A start-up override that can be activated externally is integrated as well. In order to detect short-time interferences or trip value exceeding a restart inhibit can be activated. The maximum input frequency is 5 kHz.

The input and output circuits are galvanically isolated.

The KFD2-DWB-Ex1.D can be supplied via the Power Rail. It also transfers a collective error message via the Power Rail.

Connection

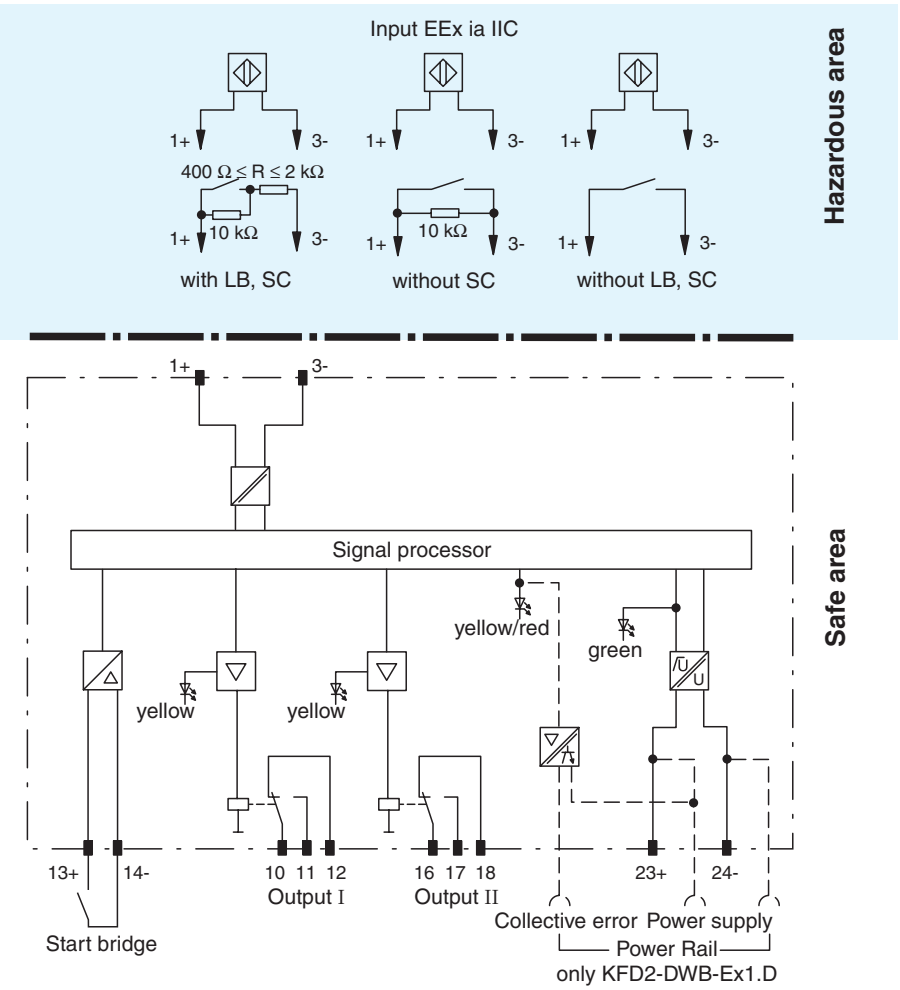

Composition

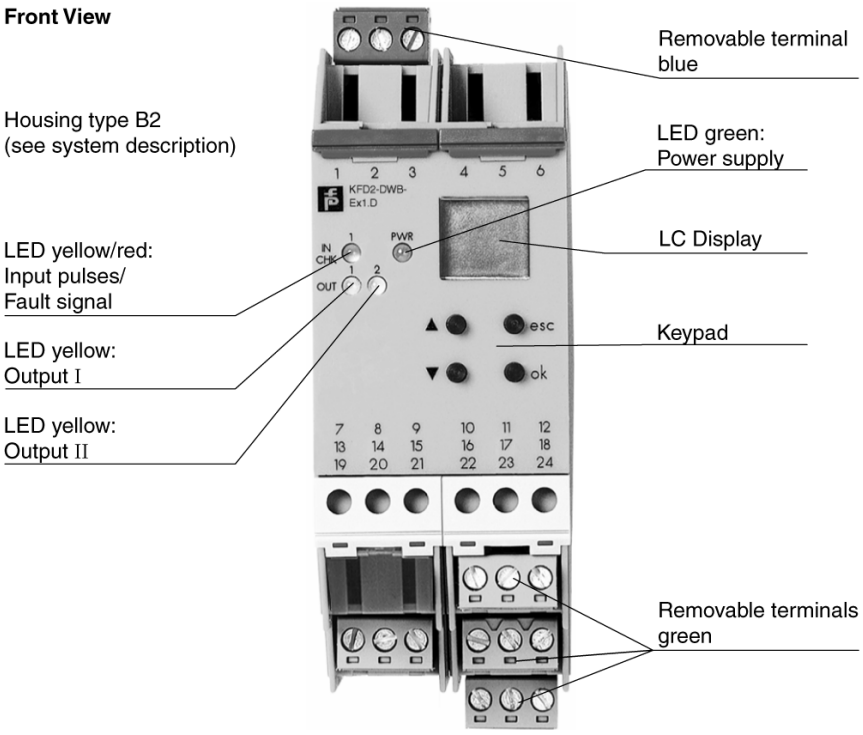

Release date 2005-12-05 15:03 Date of issue 2005-12-05 049542_ENG.xml

Subject to reasonable modifications due to technical advances. Copyright Pepperl+Fuchs, Printed in Germany

Supply	
Connection	terminals 23+, 24- or power feed module/Power Rail
Rated voltage	20 ... 30 V DC
Rated current	approx. 100 mA
Power loss/Power consumption	≤ 1.8 W / 1.8 W
Input	
Connection	Input I: intrinsically safe: terminals 1+, 3- Input II: non-intrinsically safe: terminals 13+, 14-
Input I	acc. to EN 60947-5-6 (NAMUR), see system description for electrical data
Pulse duration	> 50 µs
Input frequency	0.001 ... 5000 Hz
Lead monitoring	breakage I ≤ 0.15 mA; short-circuit I > 6.5 mA
Input II	start-up override: 1 ... 1000 s, adjustable in steps of 1 s
Active/passive	I > 4 mA (for min. 100 ms) / I < 1.5 mA
Open-circuit voltage/short-circuit current	18 V / 5 mA
Output	
Connection	output I: terminals 10, 11, 12 output II: terminals 16, 17, 18
Collective error message	Power Rail
Output I and II	signal, relay
Contact loading	250 V AC / 2 A / cos φ ≥ 0.7; 40 V DC / 2 A
Mechanical life	5 x 10^7 switching cycles
Energized/de-energized delay	approx. 20 ms / approx. 20 ms
Transfer characteristics	
Input I	
Measurement range	0.001 ... 5000 Hz
Resolution	0.1 % of measured value , ≥ 0.001 Hz
Accuracy	0.1 % of measured value , > 0,001 Hz
Measuring time	< 100 ms
Influence of ambient temperature	0.003 %/°C (30 ppm)
Output I and II	
Response delay	≤ 200 ms
Electrical isolation	
Output I, II against eachother	reinforced insulation acc. to IEC 61140, rated insulation voltage 300 V_{eff}
Output I, II/other circuits	reinforced insulation acc. to IEC 61140, rated insulation voltage 300 V_{eff}
Start-up override/power supply and collective error	reinforced insulation acc. to IEC 61140, rated insulation voltage 300 V_{eff}
Directive conformity	
Electromagnetic compatibility	
Directive 89/336/EC	EN 61326, EN 50081-2, EN 50082-2
Conformity	
Electromagnetic compatibility	NE 21
Protection degree	IEC 60529
Protection against electric shock	IEC 61140
Ambient conditions	
Ambient temperature	-20 ... 60 °C (253 ... 333 K)
Mechanical specifications	
Protection degree	IP20
Mass	300 g
Dimensions	40 x 100 x 115 mm (1.6 x 3.9 x 4.5 in)
Data for application in conjunction with hazardous areas	
EC-Type Examination Certificate	TÜV 99 ATEX 1408 , for additional certificates see www.pepperl-fuchs.com
Group, category, type of protection	⟨Ex⟩ II (1) G D [EEx ia] IIC [circuit(s) in zone 0/1/2]
Supply	
Safety maximum voltage U_m	40 V DC (Attention! U_m is no rated voltage.)
Input I	terminals 1+, 3- EEx ia IIC
Voltage U_o	10.1 V
Current I_o	13 mA
Power P_o	34 mW (linear characteristic)
Input II	terminals 13+, 14- non-intrinsically safe
Safety maximum voltageU_m	40 V DC (Attention! U_m is no rated voltage.)
Output I and II	terminals 10, 11, 12; 16, 17, 18 non-intrinsically safe
Safety maximum voltageU_m	253 V AC (Attention! The rated voltage can be lower.)

Release date 2005-12-05 15:03 Date of issue 2005-12-05 049542_ENG.xml

Subject to reasonable modifications due to technical advances. Copyright Pepperl+Fuchs, Printed in Germany

Contact loading	253 V AC / 2 A / cos φ > 0.7; 40 V DC / 2 A resistive load
Statement of conformity	TÜV 02 ATEX 1885 X , observe statement of conformity
Group, category, type of protection, temperature classification	⟨Ex⟩ II 3 G EEx nAC IIC T4 [device in zone 2]
Electrical isolation	
Input/other circuits	safe electrical isolation acc. to EN 50020, voltage peak value 375 V
Directive conformity	
Directive 94/9 EC	EN 50014, EN 50020, EN 50021

Supplementary information

EC-Type Examination Certificate, Statement of Conformity, Declaration of Conformity and instructions have to be observed. For information see www.pepperl-fuchs.com.

Accessories

Power Rail PR-03
Power Rail UPR-03
Power feed module KFD2-EB2...

Using Power Rail PR-03 or UPR-03 the devices are supplied with 24 V DC by means of the power feed modules. If no Power Rails are used, power supply of the individual devices is possible directly via their device terminals.

Each power feed module is used for fusing and monitoring groups with up to 100 individual devices. The Power Rail PR-03 is an inset component for the DIN rail. The Power Rail UPR-03 is a complete unit consisting of the electrical inset and an aluminium profile rail 35 mm x 15 mm x 2000 mm. To make electrical contact, the devices are simply engaged.

The Power Rail must not be fed via the device terminals of the individual devices!

Release date 2005-12-05 15:03 Date of issue 2005-12-05 049542_ENG.xml

Subject to reasonable modifications due to technical advances. Copyright Pepperl+Fuchs, Printed in Germany