Features

- 1-channel isolated barrier
- 24 V DC supply (Power Rail)
- Dry contact or NAMUR inputs
- Input frequency 1 mHz ... 5 kHz
- 2 relay contact outputs
- Start-up override
- Configurable by keypad
- Line fault detection (LFD)
- Up to SIL 2 acc. to IEC 61508/IEC 61511

Function

This isolated barrier is used for intrinsic safety applications. It monitors for an overspeed or underspeed condition of a digital signal (NAMUR sensor/mechanical contact) from a hazardous area by comparing the input frequency to the user programmed reference frequency.

An overspeed or underspeed condition is signaled via the relay outputs. Line fault detection of the field circuit is indicated by a red LED, Power Rail and relay. The start-up override feature sets relay outputs to default conditions programmed by the user for up to 1,000 seconds.

The unit is easily programmed by the use of a keypad located on the front of the unit.

A unique collective error messaging feature is available when used with the Power Rail system.

n, refer to the manual and

Assembly

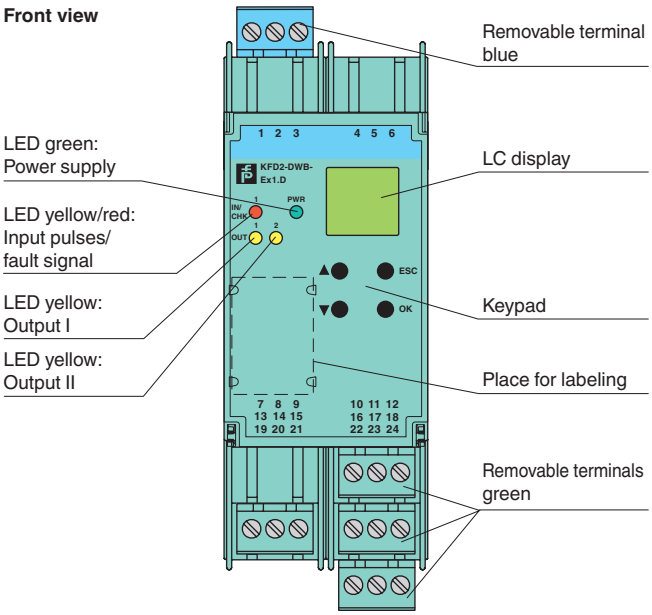

Connection

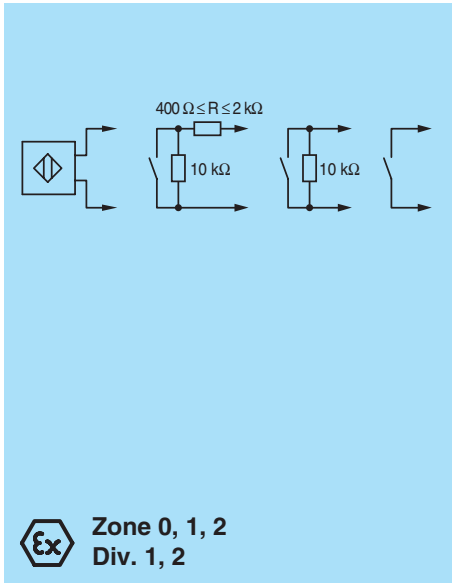

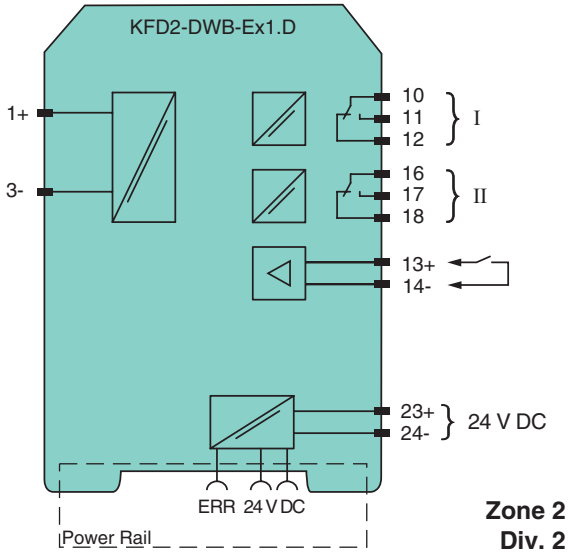

Release date 2017-09-12 15:15 Date of issue 2017-09-12 231203_eng.xml

General specifications		
Signal type		Digital Input
Functional safety related parameters		
Safety Integrity Level (SIL)		SIL 2
Supply		
Connection		terminals 23+, 24- or power feed module/Power Rail
Rated voltage	U_r	20 ... 30 V DC
Rated current	I_r	approx. 100 mA
Power dissipation/power consumption		≤ 1.8 W / 1.8 W
Input		
Connection side		field side
Connection		Input I: intrinsically safe: terminals 1+, 3- Input II: non-intrinsically safe: terminals 13+, 14-
Input I		acc. to EN 60947-5-6 (NAMUR), see system description for electrical data
Pulse duration		> 50 µs
Input frequency		0.001 ... 5000 Hz
Line fault detection		breakage I ≤ 0.15 mA; short-circuit I > 6.5 mA
Input II		startup override: 1 ... 1000 s, adjustable in steps of 1 s
Active/Passive		I > 4 mA (for min. 100 ms) / I < 1.5 mA
Open circuit voltage/short-circuit current		18 V / 5 mA
Output		
Connection side		control side
Connection		output I: terminals 10, 11, 12 output II: terminals 16, 17, 18
Output I, II		signal, relay
Contact loading		250 V AC / 2 A / cos ϕ ≥ 0.7; 40 V DC / 2 A
Mechanical life		5 x 10^7 switching cycles
Energized/De-energized delay		approx. 20 ms / approx. 20 ms
Collective error message		Power Rail
Transfer characteristics		
Input I		
Measurement range		0.001 ... 5000 Hz
Resolution		0.1 % of measured value , ≥ 0.001 Hz
Accuracy		0.1 % of measured value , > 0.001 Hz
Measuring time		< 100 ms
Influence of ambient temperature		0.003 %/K (30 ppm)
Output I, II		
Response delay		≤ 200 ms
Galvanic isolation		
Input I/other circuits		reinforced insulation according to IEC/EN 61010-1, rated insulation voltage 300 V_{eff}
Output I, II against eachother		reinforced insulation according to IEC/EN 61010-1, rated insulation voltage 300 V_{eff}
Output I, II/other circuits		reinforced insulation according to IEC/EN 61010-1, rated insulation voltage 300 V_{eff}
Start-up override/power supply and collective error		functional insulation acc. to IEC 62103, rated insulation voltage 50 V_{eff}
Indicators/settings		
Display elements		LEDs , display
Control elements		Control panel
Configuration		via operating buttons
Labeling		space for labeling at the front
Directive conformity		
Electromagnetic compatibility		
Directive 2014/30/EU		EN 61326-1:2013 (industrial locations)
Low voltage		
Directive 2014/35/EU		EN 61010-1:2010
Conformity		
Electromagnetic compatibility		NE 21:2006
Degree of protection		IEC 60529:2001
Ambient conditions		
Ambient temperature		-20 ... 60 °C (-4 ... 140 °F)
Mechanical specifications		
Degree of protection		IP20
Connection		screw terminals
Mass		300 g
Dimensions		40 x 119 x 115 mm (1.6 x 4.7 x 4.5 inch) , housing type C3

Release date 2017-09-12 15:15 Date of issue 2017-09-12 231203_eng.xml

Mounting		on 35 mm DIN mounting rail acc. to EN 60715:2001
Data for application in connection with hazardous areas		
EU-Type Examination Certificate		TÜV 99 ATEX 1408
Marking		Ex II (1)G [Ex ia Ga] IIC Ex II (1)D [Ex ia Da] IIIC Ex I (M1) [Ex ia Ma] I
Supply		
Maximum safe voltage	U_m	40 V DC (Attention! U_m is no rated voltage.)
Input I		terminals 1+, 3-: Ex ia
Voltage	U_o	10.1 V
Current	I_o	13.5 mA
Power	P_o	34 mW (linear characteristic)
Input II		terminals 13+, 14- non-intrinsically safe
Maximum safe voltage	U_m	40 V (Attention! The rated voltage can be lower.)
Output I, II		terminals 10, 11, 12; 16, 17, 18 non-intrinsically safe
Maximum safe voltage	U_m	253 V (Attention! The rated voltage can be lower.)
Contact loading		253 V AC/2 A/cos ϕ > 0.7; 40 V DC/2 A resistive load (TÜV 99 ATEX 1471)
Certificate		TÜV 02 ATEX 1885 X
Marking		Ex II 3G Ex nA nC IIC T4 Gc
Output I, II		
Contact loading		50 V AC/2 A/cos ϕ > 0.7; 40 V DC/1 A resistive load
Galvanic isolation		
Input I/other circuits		safe electrical isolation acc. to IEC/EN 60079-11, voltage peak value 375 V
Directive conformity		
Directive 2014/34/EU		EN 60079-0:2012+A11:2013 , EN 60079-11:2012 , EN 60079-15:2010
International approvals		
FM approval		
Control drawing		16-538FM-12
UL approval		E223772
IECEx approval		IECEx TUN 03.0000
Approved for		[Ex ia Ga] IIC, [Ex ia Da] IIIC, [Ex ia Ma] I
General information		
Supplementary information		Observe the certificates, declarations of conformity, instruction manuals, and manuals where applicable. For information see

Maximum Switching Power of Output Contacts

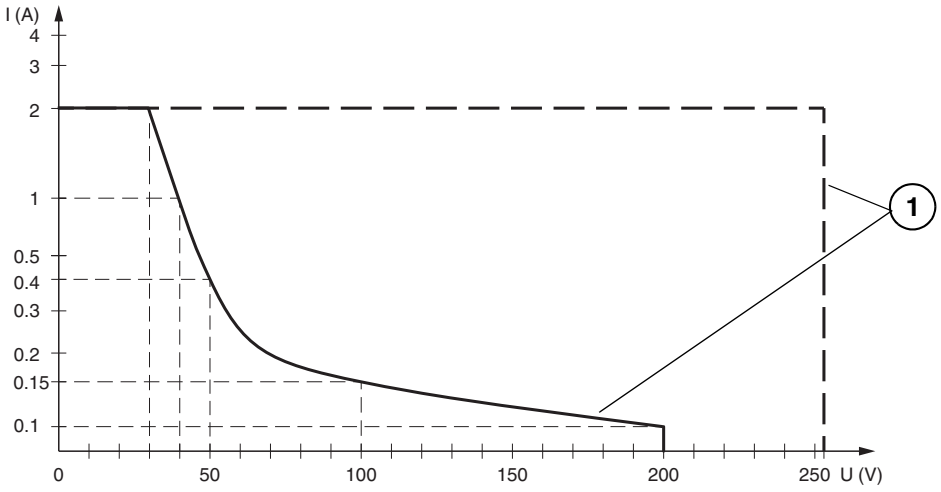

Resistive load DC

Resistive load AC

1 max. 10^5 switching cycles

Release date 2017-09-12 Date of issue 2017-09-12 231203_eng.xml

Accessories

Power feed module KFD2-EB2

The power feed module is used to supply the devices with 24 V DC via the Power Rail. The fuse-protected power feed module can supply up to 150 individual devices depending on the power consumption of the devices. Collective error messages received from the Power Rail activate a galvanically-isolated mechanical contact.

Power Rail UPR-03

The Power Rail UPR-03 is a complete unit consisting of the electrical insert and an aluminium profile rail 35 mm x 15 mm. To make electrical contact, the devices are simply engaged.

Profile Rail K-DUCT with Power Rail

The profile rail K-DUCT is an aluminum profile rail with Power Rail insert and two integral cable ducts for system and field cables. Due to this assembly no additional cable guides are necessary.



Power Rail and Profile Rail must not be fed via the device terminals of the individual devices!

Release date 2017-09-12 15:15 Date of issue 2017-09-12 231203_eng.xml