Features

- 1-channel signal conditioner
- 24 V DC supply (Power Rail)
- TC, RTD, potentiometer or voltage input
- Redundant TC input
- Current output 0/4 mA ... 20 mA
- 2 relay contact outputs
- Configurable by **PACT***ware*™ or ke ypad
- Line fault (LFD) and sensor burnout detection
- Up to SIL2 acc. to IEC 61508

Function

This signal conditioner is a universal input trip alarm that converts the signal of an RTD, thermocouple, potentiometer, or voltage source to a proportional output current. It also provides a relay trip value and isolation for non-intrinsically safe applications.

A removable terminal block K-CJC-** is available for thermocouples when internal cold junction compensation is desired.

The unit is easily programmed by the use of a keypad located on the front of the unit or with the **PACT***ware*™ configuration software.

A unique collective error messaging feature is available when used with the Power Rail system.

For additional information, refer to the manual and www.pepperl-fuchs.com.

Assembly

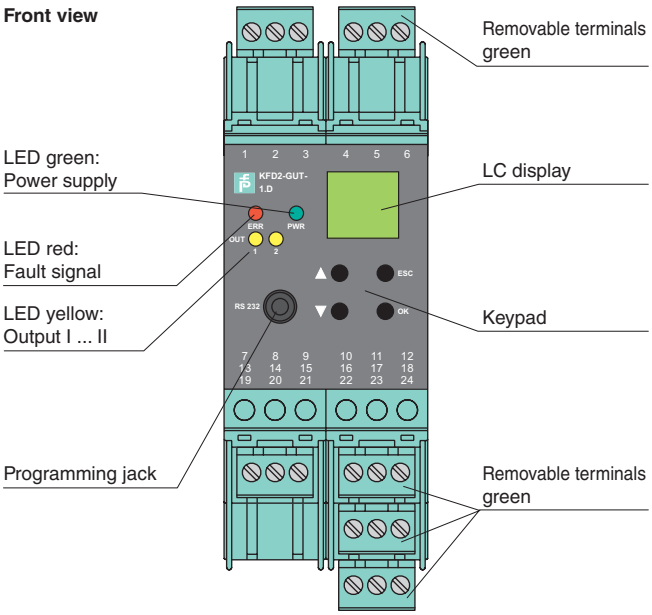

CE SIL2

Connection

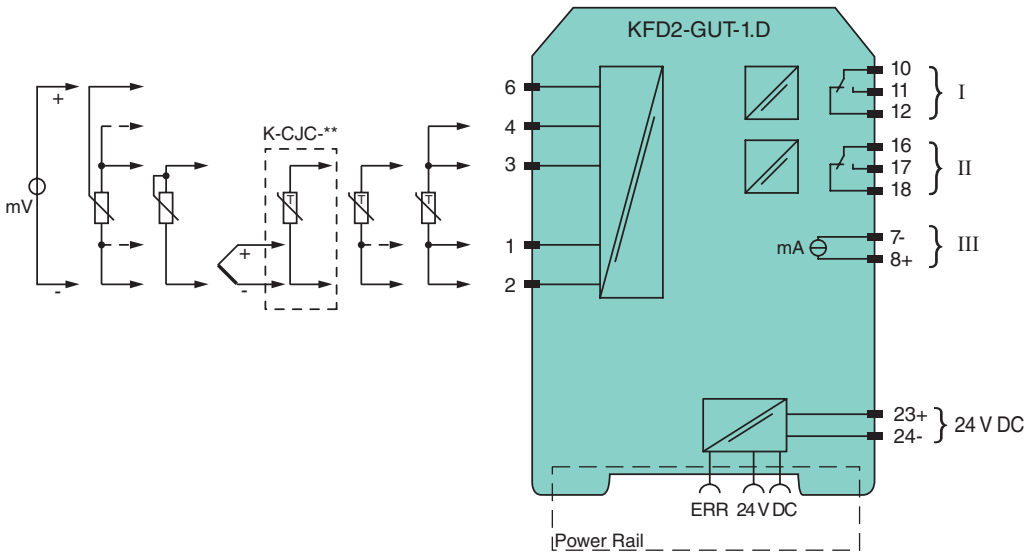

Release date 2010-11-04 14:08 Date of issue 2010-11-10 113606_ENG.xml

Subject to reasonable modifications due to technical advances. Copyright Pepperl+Fuchs, Printed in Germany

General specifications	
Signal type	Analog input
Supply	
Connection	terminals 23+, 24- or power feed module/Power Rail
Rated voltage	20 ... 30 V DC
Rated current	approx. 100 mA
Power loss/power consumption	≤ 2 W / 2.2 W
Input	
Connection	terminals 1, 2, 3, 4, 6
RTD	Pt100, Pt500, Pt1000, Ni100, Ni1000
Types of measuring	2-, 3-, 4-wire technology
Lead resistance	≤ 50 Ω
Measuring circuit monitoring	sensor burnout, sensor short-circuit
Thermocouples	type B, E, J, K, L, N, R, S, T
Cold junction compensation	external and internal
Measuring circuit monitoring	sensor burnout
Voltage	0 ... 10 V , 2 ... 10 V , 0 ... 1 V , -100 ... 100 mV
Potentiometer	0.8 ... 20 kΩ
Types of measuring	2-, 3-, 5-wire technology
Input resistance	≥ 250 kΩ (0 ... 10 V) ≥ 1 MΩ (0 ... 1 V, -100 ... 100 mV)
Measuring current	approx. 400 µA with resistance measuring sensor
Output	
Connection	output I: terminals 10, 11, 12 output II: terminals 16, 17, 18 output III: terminals 8+, 7-
Output I, II	relay
Contact loading	250 V AC / 2 A / cos ϕ ≥ 0.7 ; 40 DC / 2 A
Mechanical life	5 x 10^7 switching cycles
Energized/De-energized delay	approx. 20 ms / approx. 20 ms
Output III	Analog current output
Current range	0 ... 20 mA or 4 ... 20 mA
Open loop voltage	≤ 24 V DC
Load	≤ 650 Ω
Fault signal	downscale I ≤ 3.6 mA, upscale I ≥ 21 mA (acc. NAMUR NE43)
Transfer characteristics	
Deviation	
Temperature effect	Input: 0.005 %/K (50 ppm) of span ; current output: 0.005 %/K (50 ppm) of span
RTD	≤ 0.2 % of span
Thermocouples	max. 10µV deviation of CJC: ±0.8 K
Voltage	0.1 % of span
Potentiometer	0.1 % of span when < 5 kΩ 0.5 % of span when > 5 kΩ
Current output	≤ 20 µA
Sampling rate	approx. 700 ms
Electrical isolation	
Input/Other circuits	safe galvanic isolation acc. to EN 50020, voltage peak value 375 V
Output I, II against eachother	reinforced insulation according to IEC 61140, rated insulation voltage 300 V_{eff}
Output I, II/other circuits	reinforced insulation according to IEC 61140, rated insulation voltage 300 V_{eff}
Output III/power supply and collective error	reinforced insulation according to IEC 61140, rated insulation voltage 300 V_{eff}
Interface/power supply	reinforced insulation according to IEC 61140, rated insulation voltage 300 V_{eff}
Directive conformity	
Electromagnetic compatibility	
Directive 2004/108/EC	EN 61326-1:2006
Low voltage	
Directive 2006/95/EC	EN 50178:1997
Conformity	
Insulation coordination	EN 50178
Electrical isolation	EN 50178
Electromagnetic compatibility	NE 21
Protection degree	IEC 60529
Ambient conditions	
Ambient temperature	-20 ... 60 °C (-4 ... 140 °F)

Release date 2010-11-04 14:08 Date of issue 2010-11-10 113606_ENG.xml

Subject to reasonable modifications due to technical advances. Copyright Pepperl+Fuchs, Printed in Germany

Mechanical specifications	
Protection degree	IP20
Mass	300 g
Dimensions	40 x 119 x 115 mm (1.6 x 4.7 x 4.5 in) , housing type C3
General information	
Supplementary information	Statement of Conformity, Declaration of Conformity, Attestation of Conformity and instructions have to be observed where applicable. For information see www.pepperl-fuchs.com.

Release date 2010-11-04 14:08 Date of issue 2010-11-10 113606_ENG.xml

Subject to reasonable modifications due to technical advances. Copyright Pepperl+Fuchs, Printed in Germany

Application

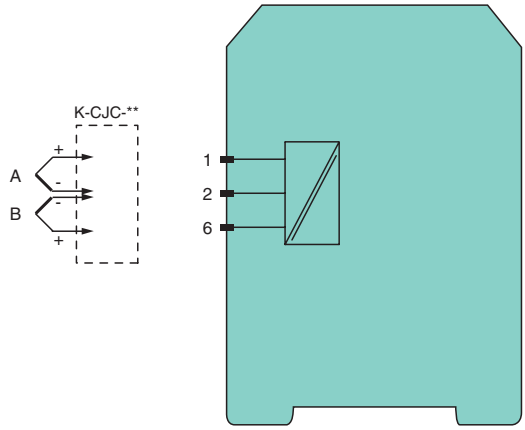

Redundant thermocouple

For higher availability it is possible to connect a second redundant thermocouple (B) of the same type to the temperature converter. The cold junction temperature is taken from the connected terminal block.

If the deviation of the both thermocouples (A and B) exceed the selected tolerance, an error will occur. If a lead breakage of one thermocouple (e. g. A) has been detected, an error message occurs and the value of the second thermocouple (B) will be taken for futher calculation.

Accessories

Power feed module KFD2-EB2

The power feed module is used to supply the devices with 24 V DC via the Power Rail. The fuse-protected power feed module can supply up to 100 individual devices depending on the power consumption of the devices. A galvanically isolated mechanical contact uses the Power Rail to transmit collective error messages.

Power Rail UPR-03

The Power Rail UPR-03 is a complete unit consisting of the electrical inset and an aluminium profile rail 35 mm x 15 mm. To make electrical contact, the devices are simply engaged.

Profile Rail K-DUCT with Power Rail

The profile rail K-DUCT is an aluminum profile rail with Power Rail insert and two integral cable ducts for system and field cables. Due to this assembly no additional cable guides are necessary.



Attention

Power Rail and Profile Rail must not be fed via the device terminals of the individual devices!

K-CJC-**

This removable terminal block with integrated temperature measurement sensor is needed for internal cold junction compensation for thermocouples. One K-CJC-** is needed for each channel.

PACT*ware*™

Device-specific drivers (DTM)

Adapter K-ADP1

Programming adapter for parameterisation via the serial RS 232 interface of a PC/Notebook

For programming, please use the new version of adapter K-ADP1 (part no. 181953, connector length 14mm). When using the previous version K-ADP1 (connector length 18 mm) the plug is exposed by approx. 3 mm. The function is not affected.

Adapter K-ADP-USB

Programming adapter for parameterisation via the serial USB interface of a PC/Notebook

Release date 2010-11-04 14:08 Date of issue 2010-11-10 113606_ENG.xml

Subject to reasonable modifications due to technical advances. Copyright Pepperl+Fuchs, Printed in Germany