Features

- 1-channel isolated barrier
- 24 V DC supply (Power Rail)
- Potentiometer input
- Voltage output 0 V ... 10 V
- Lead resistance compensation adjustment
- Accuracy 0.05 %
- Up to SIL 2 acc. to IEC 61508

Function

This isolated barrier is used for intrinsic safety applications. It provides the source voltage to a potentiometer and transfers its wiper position from hazardous areas to safe areas. It then converts the signal to a 0 V ... 10 V voltage output (consistant with 0 mA ... 20mA current output, see for example KFD2-PT2-Ex1-4).

The unit can be used in a 3-, 4-, or 5-wire configuration depending on the required measurement accuracy. Terminals 2 and 5 are used as the sense line for the potentiometer lead resistance compensation in a 5-wire configuration.

The barrier's potentiometer can be used to compensate for lead resistance up to 5 % of the hazardous area potentiometer value.

Assembly

Front view

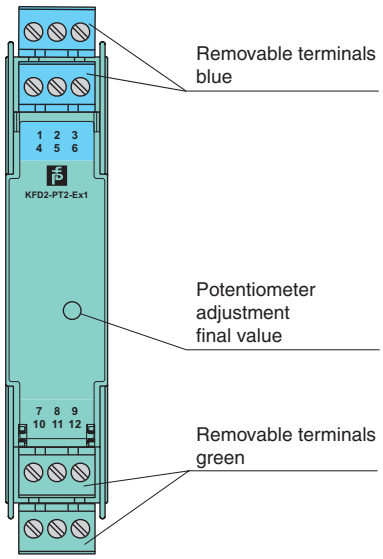

SIL 2

Connection

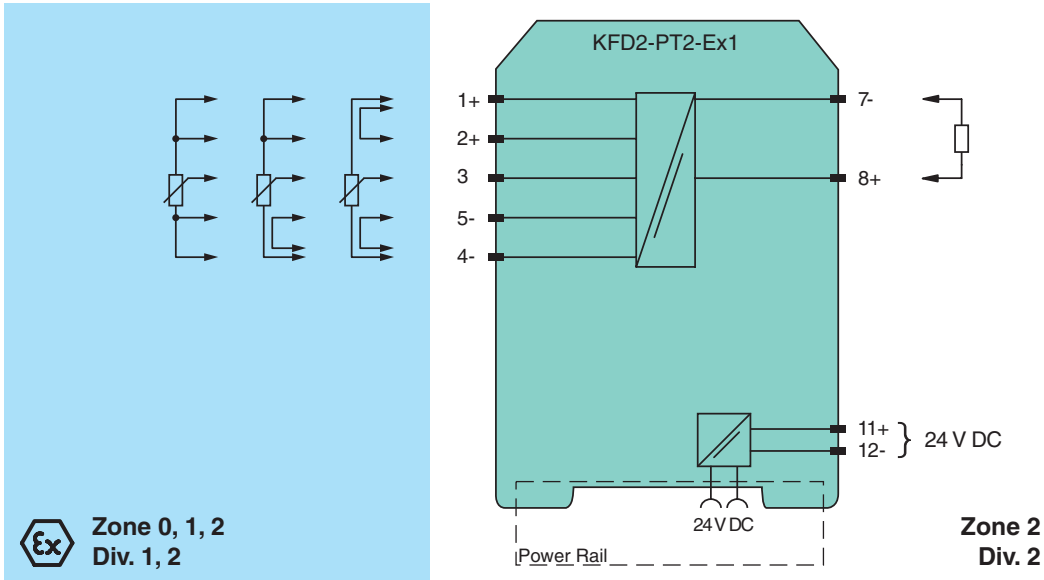

Release date 2019-01-25 09:38 Date of issue 2019-01-25 072018_eng.xml

General specifications		
Signal type		Analog input
Functional safety related parameters		
Safety Integrity Level (SIL)		SIL 2
Supply		
Connection		Power Rail or terminals 11+, 12-
Rated voltage	U_r	20 ... 35 V DC
Ripple		within the supply tolerance
Power dissipation		0.5 W
Power consumption		0.6 W
Input		
Connection side		field side
Connection		terminals 4-, 5-, 3+, 2+, 1+
Potentiometer		
Types of measuring		3-, 4-, 5-wire technology
Nominal resistance		800 Ω to 100 kΩ
Supply voltage		approx. 4.7 V
Lead resistance		5 % of the potentiometer resistance (adjustable)
Output		
Connection side		control side
Connection		terminals 7-, 8+
Voltage output		0 ... 10 V
Output resistance		≤ 30 Ω
Transfer characteristics		
Accuracy		0.05 %
Deviation		
Linearity		≤ ± 5 mV
Influence of ambient temperature		≤ 0.5 mV/K
Rise time		10 to 90 % ≤ 8 ms; 10 to 90 % within 1 % of span ≤ 25 ms
Galvanic isolation		
Output/power supply		functional insulation, rated insulation voltage 50 V AC
Indicators/settings		
Control elements		potentiometer
Configuration		via potentiometer
Directive conformity		
Electromagnetic compatibility		
Directive 2014/30/EU		EN 61326-1:2013 (industrial locations)
Conformity		
Electromagnetic compatibility		NE 21:2006
Degree of protection		IEC 60529:2001
Protection against electrical shock		UL 61010-1
Ambient conditions		
Ambient temperature		-20 ... 60 °C (-4 ... 140 °F)
Mechanical specifications		
Degree of protection		IP20
Connection		screw terminals
Mass		approx. 120 g
Dimensions		20 x 107 x 115 mm (0.8 x 4.2 x 4.5 inch) , housing type B1
Mounting		on 35 mm DIN mounting rail acc. to EN 60715:2001
Data for application in connection with hazardous areas		
EU-Type Examination Certificate		BAS 00 ATEX 7171
Marking		⟨Ex⟩ II (1)G [Ex ia Ga] IIC , ⟨Ex⟩ II (1)D [Ex ia Da] IIIC , ⟨Ex⟩ I (M1) [Ex ia Ma] I (-20 °C ≤ T_{amb} ≤ 60 °C)
Voltage	U_o	10.4 V
Current	I_o	31.4 mA
Power	P_o	82 mW
Supply		
Maximum safe voltage	U_m	250 V (Attention! The rated voltage can be lower.)
Output		
Maximum safe voltage	U_m	250 V (Attention! The rated voltage can be lower.)
Certificate		TÜV 02 ATEX 1797 X
Marking		⟨Ex⟩ II 3G Ex nA II T4
Galvanic isolation		
Input/Output		safe electrical isolation acc. to IEC/EN 60079-11, voltage peak value 375 V
Input/power supply		safe electrical isolation acc. to IEC/EN 60079-11, voltage peak value 375 V

Release date 2019-01-25 09:38 Date of issue 2019-01-25 072018_eng.xml

Directive conformity	
Directive 2014/34/EU	EN 60079-0:2012+A11:2013 , EN 60079-11:2012 , EN 60079-15:2010
International approvals	
FM approval	
Control drawing	116-0129
UL approval	
Control drawing	116-0173 (cULus)
CSA approval	
Control drawing	116-0132
IECEx approval	
IECEx certificate	IECEx BAS 10.0060 IECEx BAS 10.0061X
IECEx marking	[Ex ia Ga] IIC, [Ex ia Da] IIIC, [Ex ia Ma] I Ex ec IIC T4 Gc
General information	
Supplementary information	Observe the certificates, declarations of conformity, instruction manuals, and manuals where applicable. For information see
Accessories	
Optional accessories	- power feed module KFD2-EB2(.R4A.B)(.SP) - universal power rail UPR-03(-M)(-S) - profile rail K-DUCT-BU(-UPR-03)

Release date 2019-01-25 09:38 Date of issue 2019-01-25 072018_eng.xml

Additional information

Jumpers must be used on terminals 1, 2 and 4, 5 in 3-wire configurations. A jumper must be used between terminals 4 and 5 in 4-wire connections. In the 5-wire mode of operation, the potentiometer voltage is measured at terminals 2 and 5 and automatically readjusted.

The front side potentiometer can be used to compensate for lead resistances up to 5 % of the potentiometer value. During adjustment, the potentiometer is set to 100 % of its value and the output signal is adjusted to 100 % of the required value. This adjustment can be repeated setting the potentiometer to 0 %.

Release date 2019-01-25 09:38 Date of issue 2019-01-25 072018_eng.xml