Features

- 1-channel isolated barrier
- 24 V DC supply (Power Rail)
- Potentiometer input
- Voltage output 0 V ... 10 V
- Lead resistance compensation adjustment
- Accuracy 0.05 %
- Up to SIL2 acc. to IEC 61508

Function

This isolated barrier is used for intrinsic safety applications. It provides the source voltage to a potentiometer and transfers its wiper position from hazardous areas to safe areas. It then converts the signal to a 0 V ... 10 V voltage output (consistant with 0 mA ... 20 mA current output, see for example KFD2-PT2-Ex1-4).

The unit can be used in a 3-, 4-, or 5-wire configuration depending on the required measurement accuracy. Terminals 2 and 5 are used as the sense line for the potentiometer lead resistance compensation in a 5-wire configuration.

The barrier's potentiometer can be used to compensate for lead resistance up to 5 % of the hazardous area potentiometer value.

Assembly

Front view

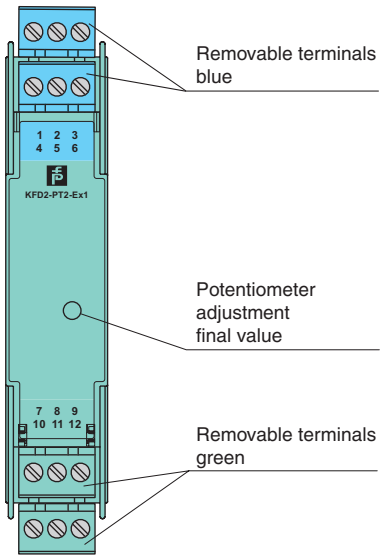

SIL2

Connection

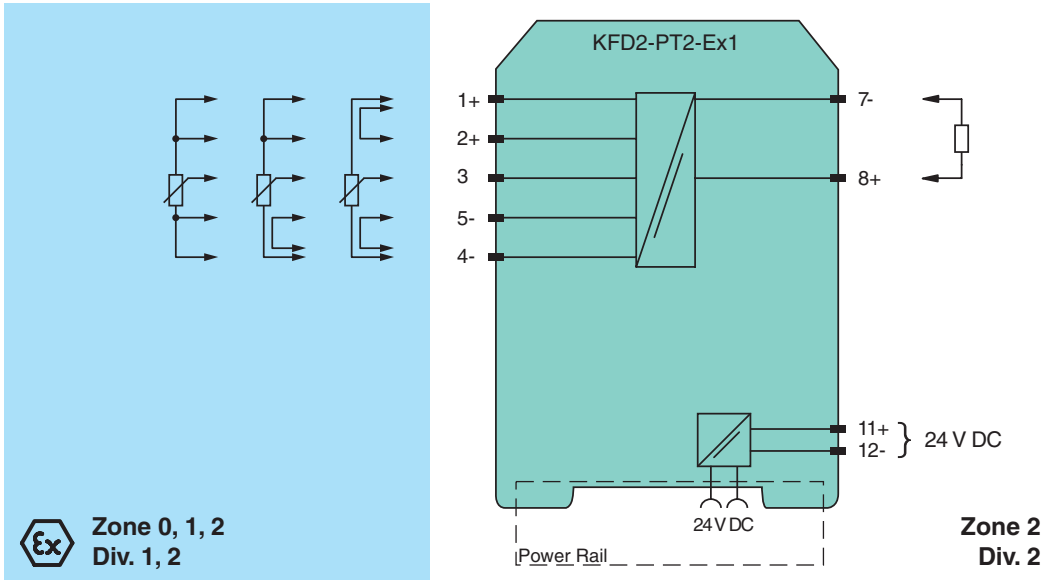

Release date 2012-11-28 13:26 Date of issue 2012-11-28 072018_eng.xml

Subject to reasonable modifications due to technical advances. Copyright Pepperl+Fuchs, Printed in Germany

General specifications		
Signal type		Analog input
Supply		
Connection		Power Rail or terminals 11+, 12-
Rated voltage		20 ... 35 V DC
Ripple		within the supply tolerance
Power loss		0.5 W
Power consumption		0.6 W
Input		
Connection		terminals 4-, 5-, 3+, 2+, 1+
Potentiometer		
Types of measuring		3-, 4-, 5-wire technology
Nominal resistance		≥ 800 Ω
Supply voltage		approx. 4.7 V
Lead resistance		5 % of the potentiometer resistance (adjustable)
Output		
Voltage output		0 ... 10 V
Connection		terminals 7-, 8+
Output resistance		≤ 30 Ω
Transfer characteristics		
Deviation		
Linearity		≤ ± 5 mV
Influence of ambient temperature		≤ 0.5 mV/K
Rise time		10 to 90 % ≤ 8 ms; 10 to 90 % within 1 % of span ≤ 25 ms
Electrical isolation		
Output/power supply		functional insulation, rated insulation voltage 50 V AC
Directive conformity		
Electromagnetic compatibility		
Directive 2004/108/EC		EN 61326-1:2006
Conformity		
Electromagnetic compatibility		NE 21:2006
Protection degree		IEC 60529:2001
Protection against electrical shock		UL 61010-1
Ambient conditions		
Ambient temperature		-20 ... 60 °C (-4 ... 140 °F)
Mechanical specifications		
Protection degree		IP20
Mass		approx. 120 g
Dimensions		20 x 107 x 115 mm (0.8 x 4.2 x 4.5 in) , housing type B1
Mounting		on 35 mm DIN mounting rail acc. to EN 60715:2001
Data for application in connection with Ex-areas		
EC-Type Examination Certificate		BAS 00 ATEX 7171 , for additional certificates see www.pepperl-fuchs.com
Group, category, type of protection		⟨Ex⟩ II (1)G [Ex ia Ga] IIC , ⟨Ex⟩ II (1)D [Ex ia Da] IIIC , ⟨Ex⟩ I (M1) [Ex ia Ma] I (-20 °C ≤ T_{amb} ≤ 60 °C)
Voltage	U_o	10.4 V
Current	I_o	31.4 mA
Power	P_o	82 mW
Supply		
Maximum safe voltage	U_m	250 V (Attention! The rated voltage can be lower.)
Output		
Maximum safe voltage	U_m	250 V (Attention! The rated voltage can be lower.)
Statement of conformity		TÜV 02 ATEX 1797 X
Group, category, type of protection, temperature class		⟨Ex⟩ II 3G Ex nA II T4
Electrical isolation		
Input/Output		safe electrical isolation acc. to IEC/EN 60079-11, voltage peak value 375 V
Input/power supply		safe electrical isolation acc. to IEC/EN 60079-11, voltage peak value 375 V
Directive conformity		
Directive 94/9/EC		EN 60079-0:2009, EN 60079-11:2012 , EN 60079-15:2010
International approvals		
FM approval		
Control drawing		116-0129
UL approval		
Control drawing		116-0173 (cULus)
CSA approval		

Release date 2012-11-28 13:26 Date of issue 2012-11-28 072018_eng.xml

Subject to reasonable modifications due to technical advances. Copyright Pepperl+Fuchs, Printed in Germany

Control drawing	116-0132
IECEx approval	IECEx BAS 10.0060 IECEx BAS 10.0061X
Approved for	[Ex ia Ga] IIC, [Ex ia Da] IIIC, [Ex ia Ma] I Ex nA II T4 Gc
General information	
Supplementary information	EC-Type Examination Certificate, Statement of Conformity, Declaration of Conformity, Attestation of Conformity and instructions have to be observed where applicable. For information see www.pepperl-fuchs.com.

Release date 2012-11-28 13:26 Date of issue 2012-11-28 072018_eng.xml

Subject to reasonable modifications due to technical advances. Copyright Pepperl+Fuchs, Printed in Germany

Additional information

Jumpers must be used on terminals 1, 2 and 4, 5 in 3-wire configurations. A jumper must be used between terminals 4 and 5 in 4-wire connections. In the 5-wire mode of operation, the potentiometer voltage is measured at terminals 2 and 5 and automatically readjusted.

The front side potentiometer can be used to compensate for lead resistances up to 5 % of the potentiometer value. During adjustment, the potentiometer is set to 100 % of its value and the output signal is adjusted to 100 % of the required value. This adjustment can be repeated setting the potentiometer to 0 %.

Accessories

Power feed module KFD2-EB2

The power feed module is used to supply the devices with 24 V DC via the Power Rail. The fuse-protected power feed module can supply up to 150 individual devices depending on the power consumption of the devices. A galvanically isolated mechanical contact uses the Power Rail to transmit collective error messages.

Power Rail UPR-03

The Power Rail UPR-03 is a complete unit consisting of the electrical inset and an aluminium profile rail 35 mm x 15 mm. To make electrical contact, the devices are simply engaged.

Profile Rail K-DUCT with Power Rail

The profile rail K-DUCT is an aluminum profile rail with Power Rail insert and two integral cable ducts for system and field cables. Due to this assembly no additional cable guides are necessary.



Power Rail and Profile Rail must not be fed via the device terminals of the individual devices!

Release date 2012-11-28 13:26 Date of issue 2012-11-28 072018_eng.xml

Subject to reasonable modifications due to technical advances. Copyright Pepperl+Fuchs, Printed in Germany