Features

- 2-channel isolated barrier
- 24 V DC supply (Power Rail)
- Current output up to 700 Ω load
- HART I/P and valve positioner
- Line fault detection (LFD)
- Accuracy 0.05 %
- Terminal blocks with test sockets
- Up to SIL2 acc. to IEC 61508

Function

This isolated barrier is used for intrinsic safety applications. It drives SMART I/P converters, electrical valves, and positioners in hazardous areas.

Digital signals are superimposed on the analog values at the field or control side and are transferred bi-directionally.

Current transferred across the DC/DC converter is repeated at terminals 1, 2 and 4, 5.

An open and shorted field circuit presents a high input impedance to the control side to allow line fault detection by control system.

If the loop resistance for the digital communication is too low, an internal resistor of 250 Ω between terminals 8, 9 and 11, 12 is available, which may be used as the HART communication resistor.

Sockets for the connection of a HART communicator are integrated into the terminals of the device.

A unique collective error messaging feature is available when used with the Power Rail system.

Assembly

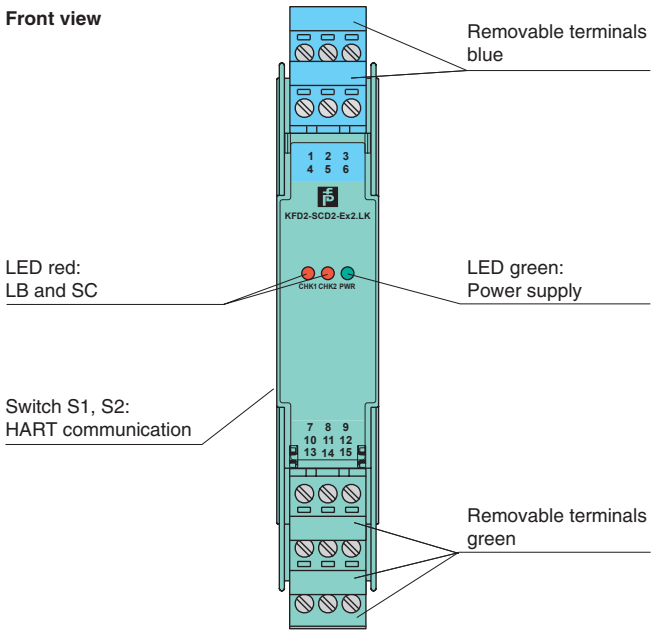

CE (Ex) SIL2

Connection

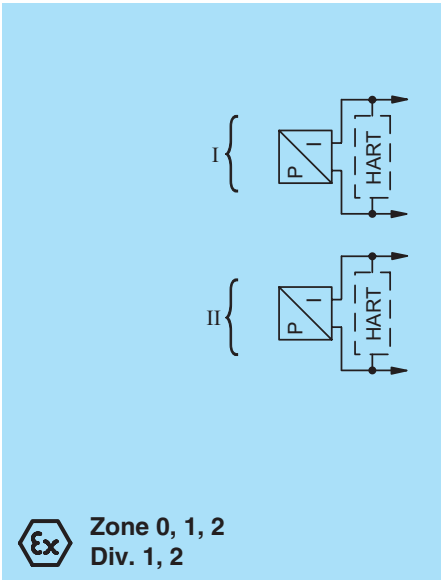

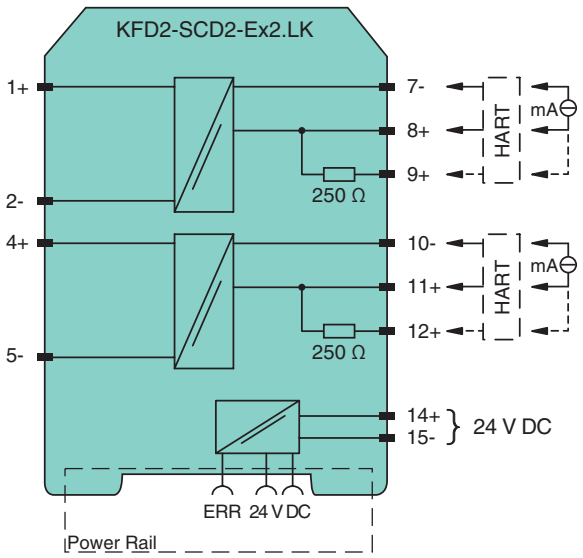

Release date 2013-05-06 09:54 Date of issue 2013-05-06 122397_eng.xml

General specifications		
Signal type		Analog output
Supply		
Connection		Power Rail or terminals 14+, 15-
Rated voltage		20 ... 35 V DC
Ripple		within the supply tolerance
Power loss		1.4 W at 20 mA into 10 V (equivalent to 500 Ω) load
Power consumption		1.8 W at 20 mA
Input		
Connection		terminals 7-, 8+, (9+); 10-, 11+, (12+)
Voltage drop		approx. 4 V or internal resistance 200 Ω at 20 mA
Input resistance		> 100 kΩ, when wiring resistance in the field > 16 V (equivalent to 800 Ω at 20 mA)
Current		4 ... 20 mA limited to approx. 25 mA
Output		
Connection		terminals 1+, 2-; 4+, 5-
Current		4 ... 20 mA
Load		100 ... 700 Ω
Voltage		≥ 14 V at 20 mA
Transfer characteristics		
Deviation		
After calibration		at 20 °C (68 °F): ≤ 10 µA incl. non-linearity, calibration, hysteresis, supply and load changes
Influence of ambient temperature		≤ 1 µA/K
Rise time		< 100 µs , 10 ... 90 % step change
Electrical isolation		
Input/power supply		functional insulation, rated insulation voltage 50 V AC
Directive conformity		
Electromagnetic compatibility		
Directive 2004/108/EC		EN 61326-1:2006
Conformity		
Electromagnetic compatibility		NE 21:2006
Protection degree		IEC 60529:2001
Protection against electrical shock		UL 61010-1
Ambient conditions		
Ambient temperature		-20 ... 60 °C (-4 ... 140 °F)
Mechanical specifications		
Protection degree		IP20
Mass		approx. 150 g
Dimensions		20 x 124 x 115 mm (0.8 x 4.9 x 4.5 in) , housing type B2
Mounting		on 35 mm DIN mounting rail acc. to EN 60715:2001
Data for application in connection with Ex-areas		
EC-Type Examination Certificate		BAS 00 ATEX 7240 , for additional certificates see www.pepperl-fuchs.com
Group, category, type of protection		⟨Ex⟩ II (1)GD, I (M1), [Ex ia] IIC, [Ex iaD], [Ex ia] I (-20 °C ≤ T_{amb} ≤ 60 °C) [circuit(s) in zone 0/1/2]
Output		Ex ia IIC, Ex iaD
Voltage	U_o	25.2 V
Current	I_o	93 mA
Power	P_o	585 mW
Supply		
Maximum safe voltage	U_m	250 V_{rms} (Attention! The rated voltage can be lower.)
Input		
Maximum safe voltage	U_m	250 V_{rms} (Attention! The rated voltage can be lower.)
Statement of conformity		TÜV 99 ATEX 1499 X , observe statement of conformity
Group, category, type of protection, temperature class		⟨Ex⟩ II 3G Ex nA II T4 [device in zone 2]
Electrical isolation		
Input/Output		safe electrical isolation acc. to IEC/EN 60079-11, voltage peak value 375 V
Output/power supply		safe electrical isolation acc. to IEC/EN 60079-11, voltage peak value 375 V
Directive conformity		
Directive 94/9/EC		EN 60079-0:2009, EN 60079-11:2007, EN 60079-15:2005, EN 61241-11:2006
International approvals		
UL approval		
Control drawing		116-0173 (cULus)
IECEx approval		IECEx BAS 04.0014
Approved for		[Zone 0] [Ex ia] IIC, [Ex iaD], [Ex ia] I
General information		

Release date 2013-05-06 09:54 Date of issue 2013-05-06 122397_eng.xml

Supplementary information	EC-Type Examination Certificate, Statement of Conformity, Declaration of Conformity, Attestation of Conformity and instructions have to be observed where applicable. For information see www.pepperl-fuchs.com.

Release date 2013-05-06 09:54 Date of issue 2013-05-06 122397_eng.xml

Additional information

Lead monitoring, input characteristics

During lead breakage (> 16 V) in the field the input resistance is > 100 kΩ, the field current is < 1 mA and the red LED is flashing.

During short circuit (< 50 Ω) in the field the input resistance is approx. 20 kΩ, the input current and the field current are approx. 1 mA and the red LED is flashing.

The voltage drop at the current input (terminals 7-, 8+ and 10-, 11+) is lower than 4 V. Thus, it corresponds to an input resistance of 200 Ω at 20 mA. The AC input impedance corresponds to the load impedance of the unit.

Adjustment HART function

When using positioners, which do not meet the HART standard, set the switches to the 1 position (without HART function) (see adjustment table).

Switch		Position	Function
Channel 1	Channel 2		
S1.1 S1.2	S2.1 S2.2	0 (OFF) 0 (OFF)	HART
S1.1 S1.2	S2.1 S2.2	0 (OFF) 1 (ON)	non HART
S1.1 S1.2	S2.1 S2.2	1 (ON) 0 (OFF)	
S1.1 S1.2	S2.1 S2.2	1 (ON) 1 ON)	



Accessories

Power feed module KFD2-EB2

The power feed module is used to supply the devices with 24 V DC via the Power Rail. The fuse-protected power feed module can supply up to 150 individual devices depending on the power consumption of the devices. A galvanically isolated mechanical contact uses the Power Rail to transmit collective error messages.

Power Rail UPR-03

The Power Rail UPR-03 is a complete unit consisting of the electrical inset and an aluminium profile rail 35 mm x 15 mm. To make electrical contact, the devices are simply engaged.

Profile Rail K-DUCT with Power Rail

The profile rail K-DUCT is an aluminum profile rail with Power Rail insert and two integral cable ducts for system and field cables. Due to this assembly no additional cable guides are necessary.



Power Rail and Profile Rail must not be fed via the device terminals of the individual devices!

Release date 2013-05-06 09:54 Date of issue 2013-05-06 122397_eng.xml