- 2-channel
- Output EEx ia IIC
- 24 V DC supply voltage
- Output current max. 45 mA
- Logic inputs non-polarized
- EMC acc. to NAMUR NE 21
- LED accord. to NAMUR NE 44
- Up to SIL2 acc. to IEC 61508

without lead monitoring

KFD2-SL2-Ex2.B

Function

The devices each have a logic input that is isolated from the power supply. The field devices are controlled by means of these logic inputs.

Voltage signals in a range of 16 V DC ... 30 V DC are accepted as 1-signals. The 0-signal must be within a range of DC 0 V... 5 V. The current consumption of the logic inputs is about 3 mA each.

The outputs have the characteristics of a voltage supply with 24 V and 270 Ω. The output current is limited to 45 mA.

Application

- Control/supply of intrinsically safe valves, audible alarms, indicators etc.
- Control/supply of semiconductors (e. g. LED or LCD units)
  In case of controlling semiconductors, a parallel resistor of approx. 10 kΩ, directly connected at the load, may be necessary, if the lead breakage monitoring is activated.

Connection

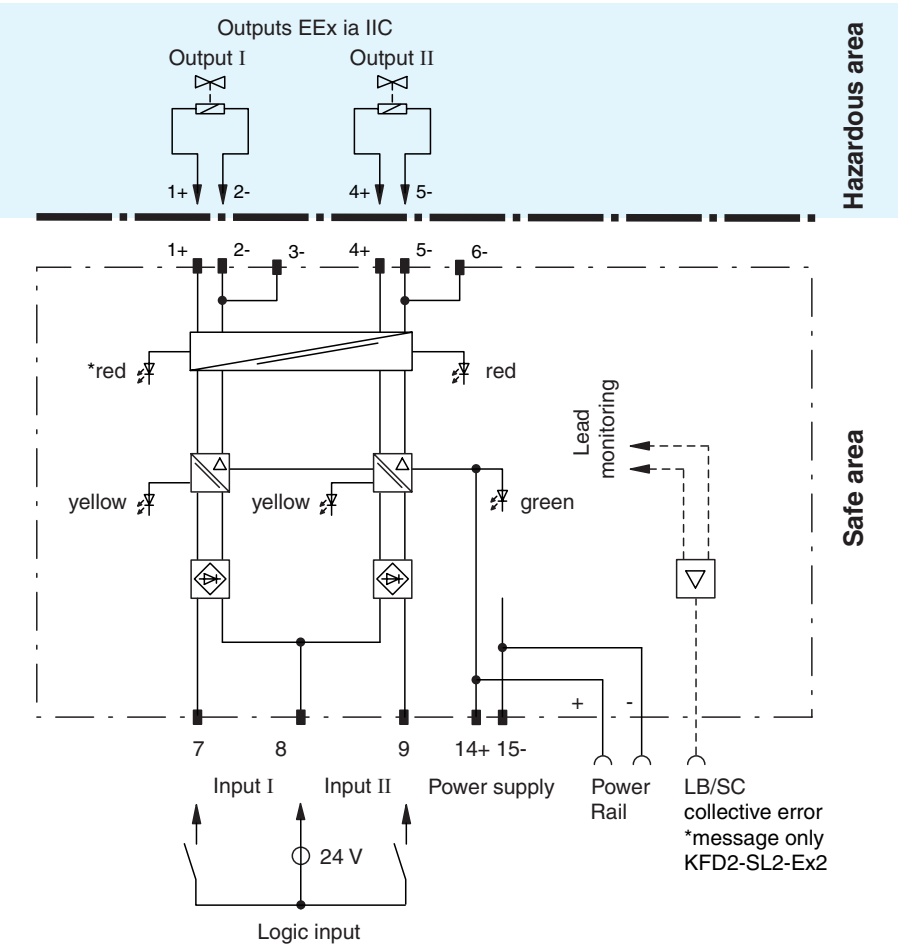

Composition

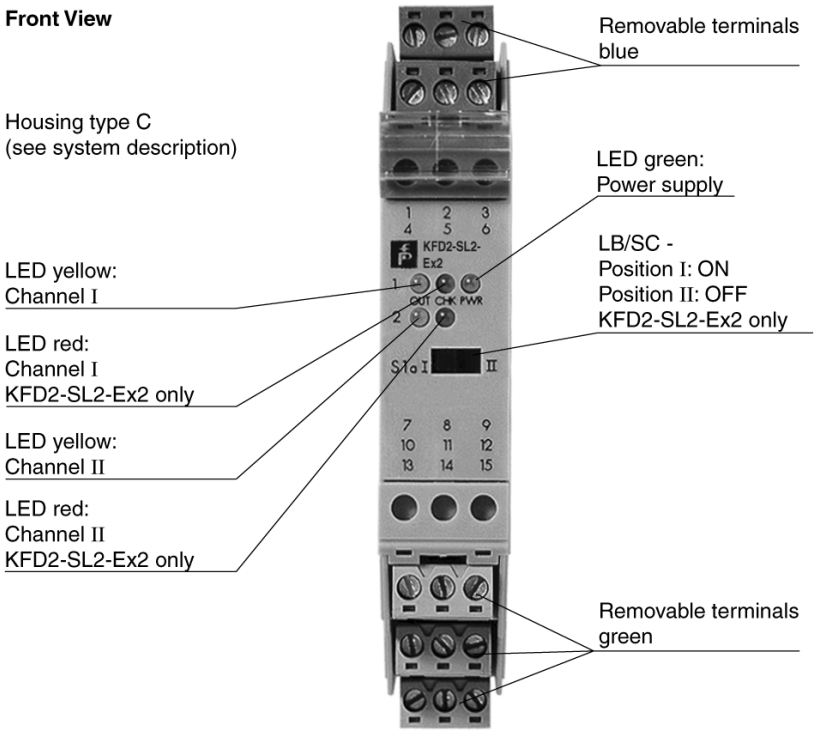

Release date 2008-12-01 10:04 Date of issue 2008-12-01 098089_ENG.xml

Subject to reasonable modifications due to technical advances. Copyright Pepperl+Fuchs, Printed in Germany

Supply	
Connection	Power Rail or terminals 14+, 15-
Rated voltage	20 ... 30 V DC
Power consumption	≤ 3.3 W at 45 mA output current
Input	
Connection	terminals 7, 8, 9
Input current	approx. 3 mA at 24 V DC
Signal level	1-signal: 16 ... 30 V DC 0-signal: 0 ... 5 V DC
Output	
Internal resistor	272 Ω
Limit	current I_E: 45 mA voltage U_E: 11.7 V
Open loop voltage	≥ 24 V
Connection	terminals 1+, 2- or 3- channel 1; terminals 4+, 6- channel 2
Output rated operating current	45 mA
Output signal	these values are valid for rated operational voltages from 20 ... 30 V DC
Energized/de-energized delay	≤ 20 ms / ≤ 20 ms
Electrical isolation	
Input/power supply	functional insulation acc. to EN 50178, rated insulation voltage 50 V_{eff}
Input/input	not available
Output/output	not available
Directive conformity	
Electromagnetic compatibility	
Directive 89/336/EC	EN 61326, EN 50081-2
Conformity	
Electromagnetic compatibility	NE 21
Protection degree	IEC 60529
Ambient conditions	
Ambient temperature	-20 ... 50 °C (253 ... 323 K)
Mechanical specifications	
Protection degree	IP20
Mass	approx. 150 g
Dimensions	20 x 119 x 115 mm (0.8 x 4.7 x 4.5 in)
Data for application in conjunction with hazardous areas	
EC-Type Examination Certificate	ZELM 00 ATEX 0024 , for additional certificates see www.pepperl-fuchs.com
Group, category, type of protection	⟨Ex⟩ II (1)GD [EEx ia] IIC [circuit(s) in zone 0/1/2]
Output	EEx ia IIC
Voltage U_o	28 V
Current I_o	110 mA
Power P_o	770 mW (linear characteristic)
Supply	
Safety maximum voltage U_m	40 V (Attention! The rated voltage can be lower.)
Input	
Safety maximum voltage U_m	60 V (Attention! The rated voltage can be lower.)
Collective error indication	
Safety maximum voltage U_m	40 V (Attention! The rated voltage can be lower.)
Statement of conformity	TÜV 02 ATEX 1820 X , observe statement of conformity
Group, category, type of protection, temperature classification	⟨Ex⟩ II 3G EEx nA II T4 bzw. EEx nAC IIC T4 [device in zone 2]
Electrical isolation	
Input/output	safe electrical isolation acc. to EN 50020, voltage peak value 375 V
Output/power supply	safe electrical isolation acc. to EN 50020, voltage peak value 375 V
Directive conformity	
Directive 94/9 EC	EN 50014, EN 50020, EN 50021

Supplementary information

EC-Type Examination Certificate, Statement of Conformity, Declaration of Conformity and instructions have to be observed. For information see www.pepperl-fuchs.com.

Release date 2008-12-01 10:04 Date of issue 2008-12-01 098089_ENG.xml

Subject to reasonable modifications due to technical advances. Copyright Pepperl+Fuchs, Printed in Germany

Notes

Lead monitoring (only KFD2-SL2-Ex2)

A fault signal is activated across the Power Rail (UPR-03) in the case of an error (lead breakage > 15 kΩ or lead short circuit < 50 Ω). The power feed module evaluates and passes on the fault signal by means of a potentially free contact.

Output circuit diagramm

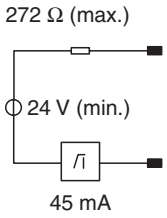

Output characteristic for input voltage 20 V ... 30 V

E: Curve angle point (U_E, I_E)

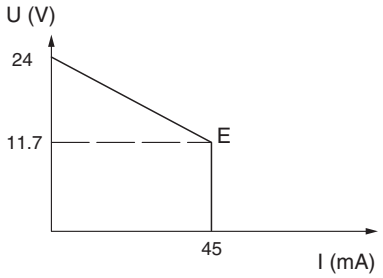

Accessories

Power Rail PR-03
Power Rail UPR-03
Power feed module KFD2-EB2...

Using Power Rail PR-03 or UPR-03 the devices are supplied with 24 V DC by means of the power feed modules. If no Power Rails are used, power supply of the individual devices is possible directly via their device terminals.

Each power feed module is used for fusing and monitoring groups with up to 100 individual devices. The Power Rail PR-03 is an inset component for the DIN rail. The Power Rail UPR-03 is a complete unit consisting of the electrical inset and an aluminium profile rail 35 mm x 15 mm x 2000 mm. To make electrical contact, the devices are simply engaged.

The Power Rail must not be fed via the device terminals of the individual devices!

Release date 2008-12-01 10:04 Date of issue 2008-12-01 098089_ENG.xml

Subject to reasonable modifications due to technical advances. Copyright Pepperl+Fuchs, Printed in Germany