Features

- 2-channel isolated barrier
- 24 V DC supply (Power Rail)
- Output 45 mA at 11.7 V DC
- Logic input, non-polarized
- Up to SIL 2 acc. to IEC 61508

Function

This isolated barrier is used for intrinsic safety applications.

The device supplies power to solenoids, LEDs and audible alarms located in a hazardous area.

It is controlled via logic signals. The inputs have two defined states: 1-Signal = 16 V DC ... 30 V DC, 0-Signal = 0 V DC ... 5 V DC. The current consumption of the input is about 3 mA.

At full load, 11.7 V at 45 mA is available for the hazardous area application.

Assembly

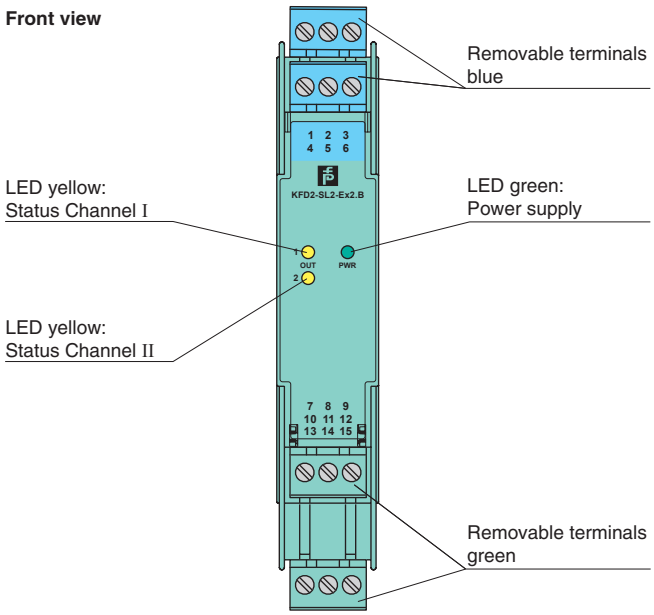

SIL 2

Connection

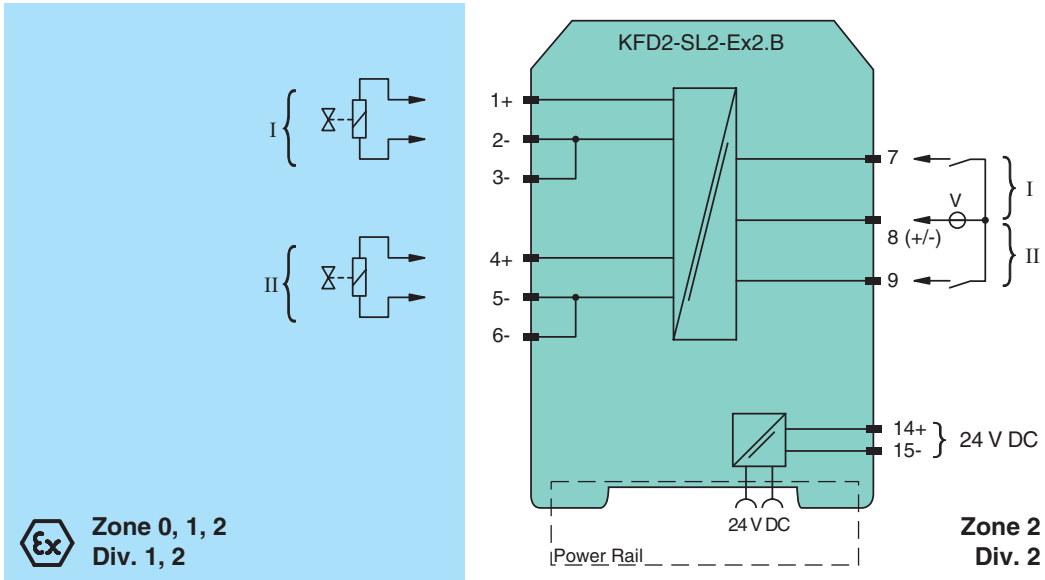

Release date 2019-01-25 09:38 Date of issue 2019-01-25 184259_eng.xml

General specifications		
Signal type		Digital Output
Functional safety related parameters		
Safety Integrity Level (SIL)		SIL 2
Supply		
Connection		Power Rail or terminals 14+, 15-
Rated voltage	U_r	20 ... 30 V DC
Power consumption		≤ 3.3 W at 45 mA output current
Input		
Connection side		control side
Connection		terminals 7, 8, 9
Input current		approx. 3 mA at 24 V DC
Signal level		1-signal: 16 ... 30 V DC 0-signal: 0 ... 5 V DC
Output		
Connection side		field side
Internal resistor	R_i	272 Ω
Current	I_e	≤ 45 mA
Voltage	U_e	≥ 11.7 V
Open loop voltage	U_s	≥ 24 V
Connection		terminals 1+, 2-, 3- channel 1 , terminals 4+, 5-, 6- channel 2
Output rated operating current		45 mA
Output signal		These values are valid for the rated operating voltages from 20 ... 30 V DC.
Energized/De-energized delay		≤ 20 ms / ≤ 20 ms
Galvanic isolation		
Input/Output		reinforced insulation according to IEC/EN 61010-1, rated insulation voltage 300 V_{eff}
Input/power supply		reinforced insulation according to IEC/EN 61010-1, rated insulation voltage 300 V_{eff}
Power supply/Output		reinforced insulation according to IEC/EN 61010-1, rated insulation voltage 300 V_{eff}
Indicators/settings		
Display elements		LEDs
Labeling		space for labeling at the front
Directive conformity		
Electromagnetic compatibility		
Directive 2014/30/EU		EN 61326-1:2013 (industrial locations)
Conformity		
Electromagnetic compatibility		NE 21:2006
Degree of protection		IEC 60529:2001
Protection against electrical shock		EN 61010-1:2010
Ambient conditions		
Ambient temperature		-20 ... 50 °C (-4 ... 122 °F)
Mechanical specifications		
Degree of protection		IP20
Connection		screw terminals
Mass		approx. 150 g
Dimensions		20 x 119 x 115 mm (0.8 x 4.7 x 4.5 inch) , housing type B2
Mounting		on 35 mm DIN mounting rail acc. to EN 60715:2001
Data for application in connection with hazardous areas		
EU-Type Examination Certificate		ZELM 00 ATEX 0024
Marking		⟨Ex⟩ II (1)G [Ex ia Ga] IIC ⟨Ex⟩ II (1)D [Ex ia Da] IIIC ⟨Ex⟩ I (M1) [Ex ia Ma] I
Output		Ex ia
Voltage	U_o	28 V
Current	I_o	110 mA
Power	P_o	770 mW (linear characteristic)
Supply		
Maximum safe voltage	U_m	40 V (Attention! The rated voltage can be lower.)
Type of protection [EEx ia and EEx ib]		
Input		
Maximum safe voltage	U_m	60 V (Attention! The rated voltage can be lower.)
Collective error message		
Maximum safe voltage	U_m	40 V (Attention! The rated voltage can be lower.)
Certificate		TÜV 02 ATEX 1820 X

Release date 2019-01-25 09:38 Date of issue 2019-01-25 184259_eng.xml

Marking	Ⓔx II 3G Ex nA IIC T4 Gc
Galvanic isolation	
Input/Output	safe electrical isolation acc. to IEC/EN 60079-11, voltage peak value 375 V
Output/power supply	safe electrical isolation acc. to IEC/EN 60079-11, voltage peak value 375 V
Directive conformity	
Directive 2014/34/EU	EN 60079-0:2012+A11:2013 , EN 60079-11:2012 , EN 60079-15:2010 , EN 60079-26:2007 , EN 50303:2000
International approvals	
IECEx approval	
IECEx certificate	IECEx TUN 04.0001
IECEx marking	[Ex ia Ga] IIC, [Ex ia Da] IIIC, [Ex ia Ma] I
General information	
Supplementary information	Observe the cer conformity, instruction manuals, and manuals where applicable. For information see
Accessories	
Optional accessories	- power feed module KFD2-EB2(.R4A.B)(.SP) - universal power rail UPR-03(-M)(-S) - profile rail K-DUCT-BU(-UPR-03)

Output characteristic

Output circuit diagramm

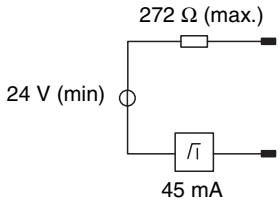

Output characteristic for input voltage 20 V ... 30 V
E: Curve angle point (U_E, I_E)

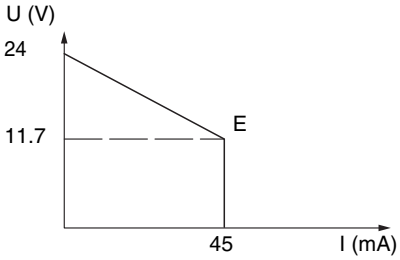

Release date 2019-01-25 09:38 Date of issue 2019-01-25 184259_eng.xml