- 1-channel
- Control circuit EEx ia IIC
- Device installation permissible in zone 2
- Reversible mode of operation
- Output I: signal output (passive electronic output, non-polarised)
  Output II: either signal output or error message (passive electronic output, non-polarised)
- EMC acc. to NAMUR NE 21
- LB/SC monitoring
- LB/SC collective error message via Power Rail
- Up to SIL2 acc. to IEC 61508

24 V DC

KFD2-SOT2-Ex1.LB

Function

The transformer isolated barrier transfers digital signals from the hazardous area. Sensors per EN 60947-5-6 (NAMUR) and mechanical contacts may be used as alarms. The control circuit monitored for lead breakage (LB) and short circuit (SC). The external faults are indicated according to NAMUR NE44 by a red flashing LED. Additionally a LB/SC collective error message will be transferred via Power Rail to the power feed module. The output II is optionally assigned to the input signal or the fault signal with the S2 switch. The intrinsically safe input is per EN 50020 safely isolated from the output and the power supply. Both transistor outputs are galvanically connected and per EN 50178 galvanically isolated from the power supply.

Connection

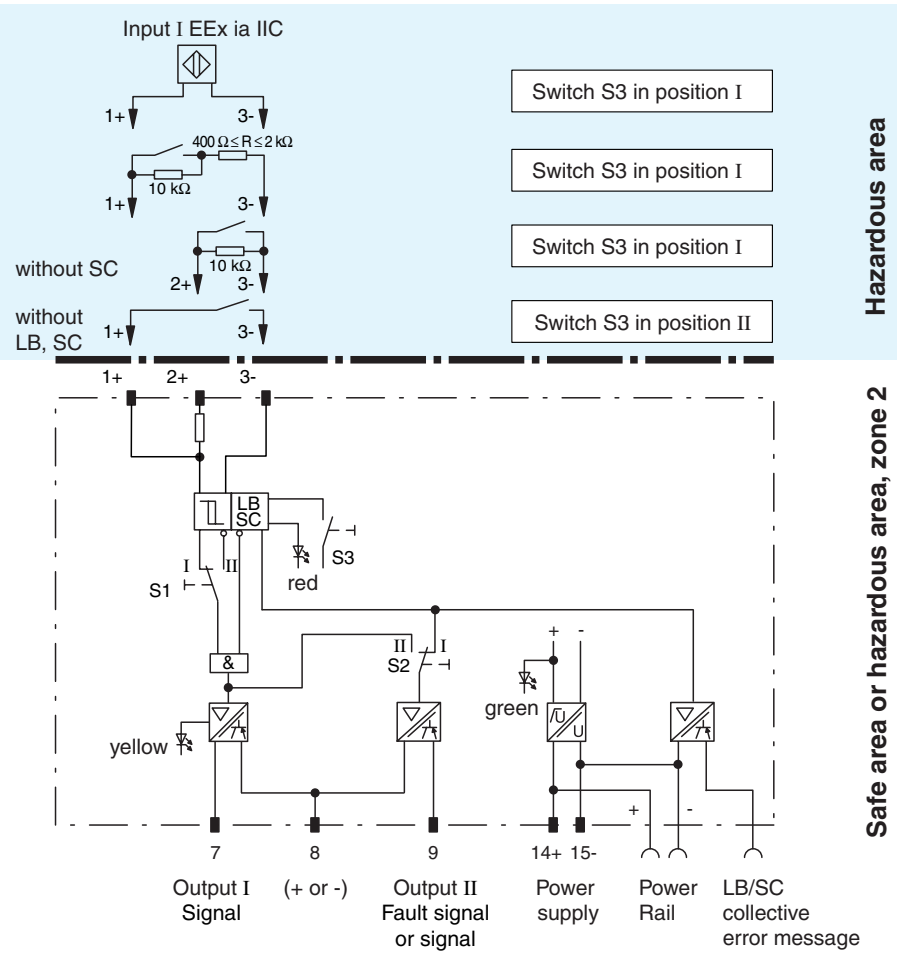

Composition

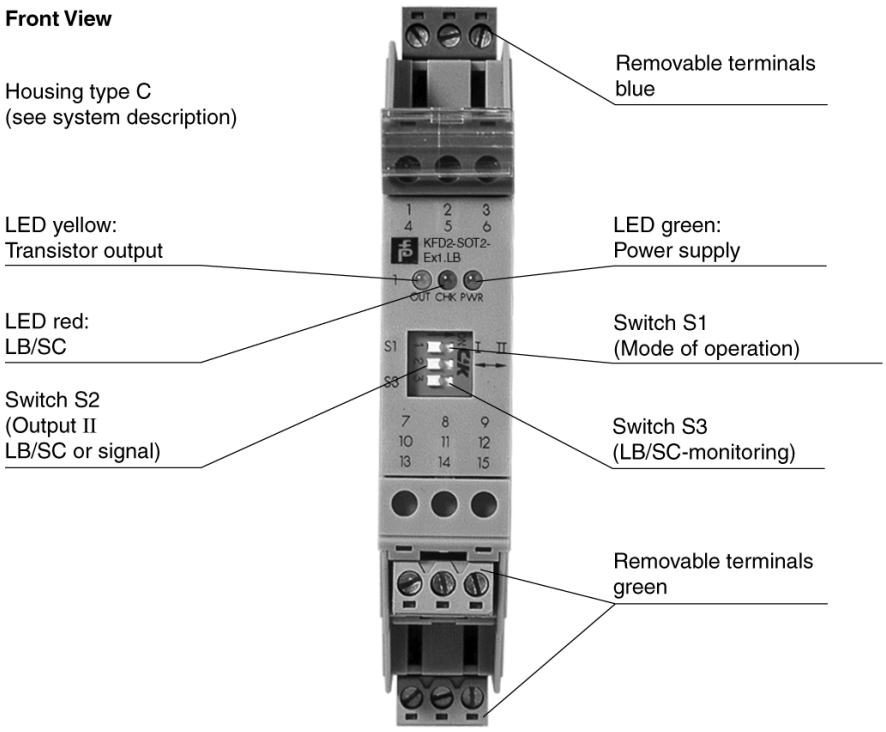

Release date 2005-12-13 10:34 Date of issue 2005-12-13 109389_ENG.xml

Subject to reasonable modifications due to technical advances.
Copyright Pepperl+Fuchs, Printed in Germany

Supply		
Connection		Power Rail or terminals 14+, 15-
Rated voltage		20 ... 30 V DC
Ripple		≤ 10 %
Rated current		≤ 50 mA
Input		
Connection		terminals 1+, 2+, 3-
Rated values		acc. to EN 60947-5-6 (NAMUR), see system description for electrical data
Lead monitoring		breakage I ≤ 0.1 mA , short-circuit I > 6 mA
Output		
Connection		output I: terminals 7, 8 ; output II: terminals 8, 9
Collective error message		Power Rail
Signal level		1-signal: (external voltage) - 2.5 V max. for 10 mA or 3 V max. for 100 mA (100 mA, short-circuit proof) 0-signal: switched off (off-state current ≤ 10 µA)
Output I		signal, passive electronic output
Output II		signal or fault signal; passive transistor output)
Transfer characteristics		
Switching frequency		≤ 5 kHz
Electrical isolation		
Output/power supply		function insulation acc. to EN 50178, rated insulation voltage 50 V_{eff}
Output/output		not available
Directive conformity		
Electromagnetic compatibility		
Directive 89/336/EC		EN 61326, EN 50081-2
Conformity		
Electrical isolation		EN 50178
Electromagnetic compatibility		NE 21
Protection degree		IEC 60529
Ambient conditions		
Ambient temperature		-20 ... 60 °C (253 ... 333 K)
Mechanical specifications		
Protection degree		IP20
Mass		approx. 150 g
Dimensions		20 x 118 x 115 mm (0.8 x 4.6 x 4.5 in)
Data for application in conjunction with hazardous areas		
EC-Type Examination Certificate		PTB 00 ATEX 2035 , for additional certificates see www.pepperl-fuchs.com
Group, category, type of protection		⟨Ex⟩ II (1) G D [EEx ia] IIC [circuit(s) in zone 0/1/2]
Input		EEx ia IIC
Voltage	U_0	10.5 V
Current	I_0	13 mA
Power	P_0	34 mW (linear characteristic)
Supply		
Safety maximum voltage U_m		40 V DC (Attention! The rated voltage can be lower.)
Type of protection [EEx ia and EEx ib]		
Explosion group		IIA IIB IIC
External capacitance		75 µF 16.8 µF 2.4 µF
External inductance		1000 mH 740 mH 200 mH
Output		
Safety maximum voltage U_m		40 V DC (Attention! The rated voltage can be lower.)
Statement of conformity		TÜV 99 ATEX 1499 X , observe statement of conformity
Group, category, type of protection, temperature classification		⟨Ex⟩ II 3 G EEx nA II T4 [device in zone 2]
Electrical isolation		
Input/output		safe electrical isolation acc. to EN 50020, voltage peak value 375 V
Input/power supply		safe electrical isolation acc. to EN 50020, voltage peak value 375 V
Directive conformity		
Directive 94/9 EC		EN 50014, EN 50020, EN 50021
Entity parameter		
Certification number		J.I.3002773
FM control drawing		No. 116-0035
Suitable for installation in division 2		yes
Connection		terminals 1, 3; 2, 3; 4, 6; 5, 6
Input I		
Voltage	V_{OC}	12.9 V

Release date 2005-12-13 10:34 Date of issue 2005-12-13 109389_ENG.xml

Subject to reasonable modifications due to technical advances. Copyright Pepperl+Fuchs, Printed in Germany

Current	I_t	19.8 mA		
Explosion group		A&B	C&E	D, F&G
Max. external capacitance C_a		1.273 µF	3.82 µF	10.18 µF
Max. external inductance L_a		84.8 mH	254.4 mH	678.4 mH
Safety parameter				
UL control drawing		E 106378		
CSA control drawing		LR 36087-19/LR 36087-22		
Control drawing		No. 116-0047		
Connection		terminals 1, 3; 2, 3; 4, 6; 5, 6		
Input I				
Voltage	V_{OC}	10.5 V		
Current	I_{SC}	13 mA		
Explosion group		A&B	C&E	D, F&G
Max. external capacitance C_a		2.66 µF	7.9 µF	21.3 µF
Max. external inductance L_a		192 mH	671 mH	1000 mH

Supplementary information

EC-Type Examination Certificate, Statement of Conformity, Declaration of Conformity and instructions have to be observed. For information see www.pepperl-fuchs.com.

Accessories

Power Rail PR-03
Power Rail UPR-03
Power feed module KFD2-EB2...

Using Power Rail PR-03 or UPR-03 the devices are supplied with 24 V DC by means of the power feed modules. If no Power Rails are used, power supply of the individual devices is possible directly via their device terminals.

Each power feed module is used for fusing and monitoring groups with up to 100 individual devices. The Power Rail PR-03 is an inset component for the DIN rail. The Power Rail UPR-03 is a complete unit consisting of the electrical inset and an aluminium profile rail 35 mm x 15 mm x 2000 mm. To make electrical contact, the devices are simply engaged.

The Power Rail must not be fed via the device terminals of the individual devices!

Release date 2005-12-13 10:34 Date of issue 2005-12-13 109389_ENG.xml

Subject to reasonable modifications due to technical advances. Copyright Pepperl+Fuchs, Printed in Germany