## Features

- 2-channel isolated barrier
- 24 V DC supply (Power Rail)
- Dry contact or NAMUR inputs
- Passive transistor output, non-polarized
- Line fault detection (LFD)
- Reversible mode of operation
- Up to SIL2 acc. to IEC 61508

## Function

This isolated barrier is used for intrinsic safety applications. It transfers digital signals (NAMUR sensors/mechanical contacts) from a hazardous area to a safe area.

Each proximity sensor or switch controls a passive transistor output for the safe area load. The normal output state can be reversed using switch S1 for channel I and switch S2 for channel II. Switch S3 enables or disables line fault detection of the field circuit.

During an error condition, the transistors revert to their de-energized state and LEDs indicate the fault according to NAMUR NE44.

A unique collective error messaging feature is available when used with the Power Rail system.

## Assembly

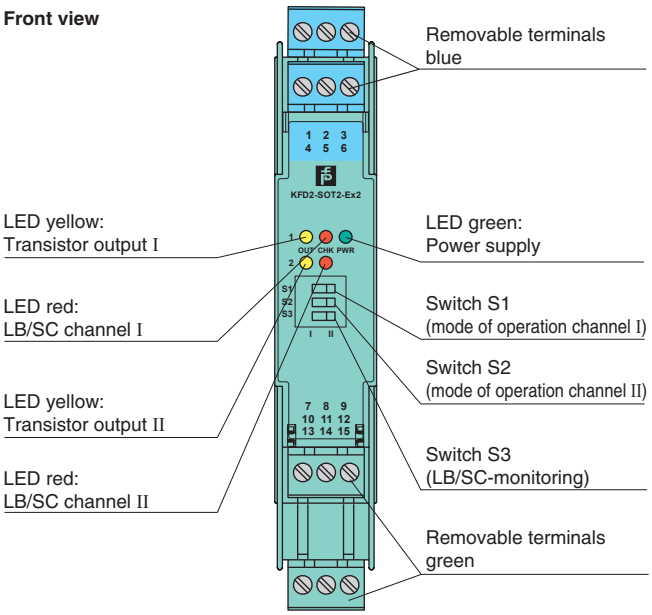


CE Ex SIL2

## Connection

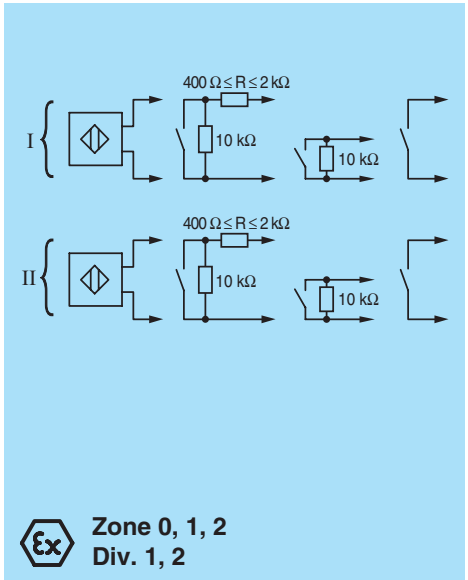


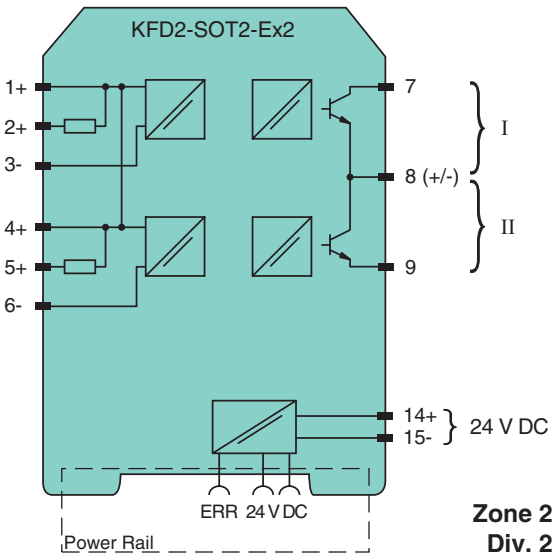


Release date 2013-08-06 16:34 Date of issue 2015-02-27 181005_eng.xml

| | | |
|---|---|---|
| **General specifications** | | |
| Signal type | | Digital Input |
| **Supply** | | |
| Connection | | Power Rail or terminals 14+, 15- |
| Rated voltage | $U_n$ | 20 ... 30 V DC |
| Ripple | | ≤ 10 % |
| Rated current | $I_n$ | ≤ 50 mA |
| **Input** | | |
| Connection | | terminals 1+, 2+, 3-; 4+, 5+, 6- |
| Rated values | | acc. to EN 60947-5-6 (NAMUR), see system description for electrical data |
| Open circuit voltage/short-circuit current | | approx. 8 V DC / approx. 8 mA |
| Switching point/switching hysteresis | | 1.2 ... 2.1 mA / approx. 0.2 mA |
| Line fault detection | | breakage I ≤ 0.1 mA , short-circuit I > 6 mA |
| **Output** | | |
| Connection | | output I: terminals 7, 8 ; output II: terminals 8, 9 |
| Switching voltage | | ≤ 30 V |
| Switching current | | ≤ 100 mA , short-circuit protected |
| Signal level | | 1-signal: switching voltage - 2.5 V max. at 10 mA switching current or 3 V max. at 100 mA switching current<br>0-signal: switched off (off-state current ≤ 10 µA) |
| Output I, II | | signal ; electronic output, passive |
| Collective error message | | Power Rail |
| **Transfer characteristics** | | |
| Switching frequency | | ≤ 5 kHz |
| **Electrical isolation** | | |
| Input/Output | | reinforced insulation acc. to IEC 62103, rated insulation voltage 300 $V_{rms}$ |
| Input/power supply | | reinforced insulation acc. to IEC 62103, rated insulation voltage 300 $V_{rms}$ |
| Output/power supply | | basic insulation according to IEC 62103, rated insulation voltage 50 $V_{eff}$ |
| Input/input | | not available |
| Output/Output | | not available |
| **Directive conformity** | | |
| Electromagnetic compatibility | | |
| Directive 2004/108/EC | | EN 61326-1:2006 |
| **Conformity** | | |
| Electrical isolation | | IEC 62103:2003 |
| Electromagnetic compatibility | | NE 21:2004 |
| Degree of protection | | IEC 60529:2001 |
| Input | | EN 60947-5-6:2000 |
| **Ambient conditions** | | |
| Ambient temperature | | -20 ... 60 °C (-4 ... 140 °F) |
| **Mechanical specifications** | | |
| Degree of protection | | IP20 |
| Mass | | approx. 150 g |
| Dimensions | | 20 x 119 x 115 mm (0.8 x 4.7 x 4.5 in) , housing type B2 |
| Mounting | | on 35 mm DIN mounting rail acc. to EN 60715:2001 |
| **Data for application in connection with Ex-areas** | | |
| EC-Type Examination Certificate | | PTB 00 ATEX 2035 , for additional certificates see www.pepperl-fuchs.com |
| Group, category, type of protection | | ⟨Ex⟩ II (1) G [Ex ia] IIC<br>⟨Ex⟩ II (1) D [Ex ia] IIIC |
| Input | | Ex ia IIC, Ex ia IIIC |
| Voltage | $U_o$ | 10.5 V |
| Current | $I_o$ | 13 mA |
| Power | $P_o$ | 34 mW (linear characteristic) |
| Supply | | |
| Maximum safe voltage | $U_m$ | 40 V DC (Attention! The rated voltage can be lower.) |
| Type of protection [EEx ia and EEx ib] | | |
| Output | | |
| Maximum safe voltage | $U_m$ | 40 V DC (Attention! The rated voltage can be lower.) |
| EC-Type Examination Certificate | | DMT 01 ATEX E 133 |
| Group, category, type of protection | | ⟨Ex⟩ I (M1) [Ex ia] I |
| Statement of conformity | | TÜV 99 ATEX 1499 X , observe statement of conformity |
| Group, category, type of protection, temperature class | | ⟨Ex⟩ II 3G Ex nA II T4 |
| Electrical isolation | | |
| Input/Output | | safe electrical isolation acc. to IEC/EN 60079-11, voltage peak value 375 V |

Release date 2013-08-06 16:34 Date of issue 2015-02-27 181005_eng.xml

| | |
|---|---|
| Input/power supply | safe electrical isolation acc. to IEC/EN 60079-11, voltage peak value 375 V |
| Directive conformity | |
| Directive 94/9/EC | EN 60079-0:2012 , EN 60079-11:2012 , EN 60079-15:2010 , EN 50303:2000 |
| **International approvals** | |
| FM approval | |
| Control drawing | 116-0035 |
| CSA approval | |
| Control drawing | 116-0047 |
| IECEx approval | IECEx PTB 05.0011 |
| Approved for | [Ex ia] IIC , [Ex ia] I , [Ex ia] IIIC |
| **General information** | |
| Supplementary information | EC-Type Examination Certificate, Statement of Conformity, Declaration of Conformity, Attestation of Conformity and instructions have to be observed where applicable. For information see www.pepperl-fuchs.com. |

Release date 2013-08-06 16:34 Date of issue 2015-02-27 181005_eng.xml

## Configuration

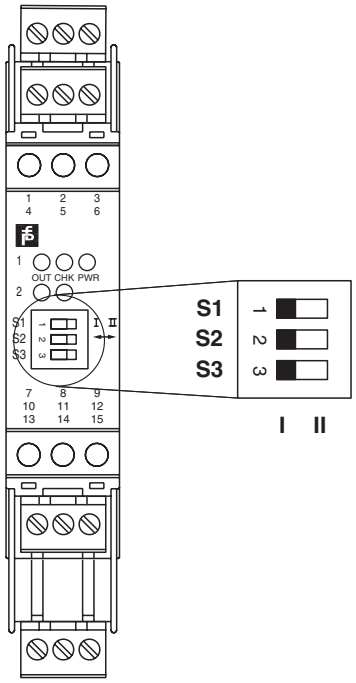


### Switch position

| S | Function | | Position |
|---|---|---|---|
| 1 | Mode of operation Output I active | with high input current | I |
| | | with low input current | II |
| 2 | Mode of operation Output II active | with high input current | I |
| | | with low input current | II |
| 3 | Line fault detection | ON | I |
| | | OFF | II |

### Operating status

| Control circuit | Input signal |
|---|---|
| Initiator high impedance/ contact opened | low input current |
| Initiator low impedance/ contact closed | high input current |
| Lead breakage, lead short-circuit | Line fault |

Factory settings: switch 1, 2 and 3 in position I

## Accessories

**Power feed modules KFD2-EB2...**

The power feed module is used to supply the devices with 24 V DC via the Power Rail. The fuse-protected power feed module can supply up to 100 individual devices depending on the power consumption of the devices. A galvanically isolated mechanical contact uses the Power Rail to transmit collective error messages.

**Power Rail UPR-03**

The Power Rail UPR-03 is a complete unit consisting of the electrical inset and an aluminium profile rail 35 mm x 15 mm. To make electrical contact, the devices are simply engaged.

**The Power Rail must not be fed via the device terminals of the individual devices!**

Release date 2013-08-06 16:34 Date of issue 2015-02-27 181005_eng.xml