Features

- 2-channel isolated barrier
- 24 V DC supply (Power Rail)
- Dry contact or NAMUR inputs
- Isolated passive transistor output, non-polarized
- Line fault detection (LFD)
- Reversible mode of operation
- Up to SIL2 acc. to IEC 61508

Function

This isolated barrier is used for intrinsic safety applications. It transfers digital signals (NAMUR sensors/mechanical contacts) from a hazardous area to a safe area.

Each proximity sensor or switch controls a passive transistor output for the safe area load. Both transistor outputs are isolated from each other and isolated from the power supply. The normal output state can be reversed using switch S1 for channel I and switch S2 for channel II. Switch S3 enables or disables line fault detection of the field circuit.

During an error condition, the transistors revert to their de-energized state and LEDs indicate the fault according to NAMUR NE44.

A unique collective error messaging feature is available when used with the Power Rail system.

Assembly

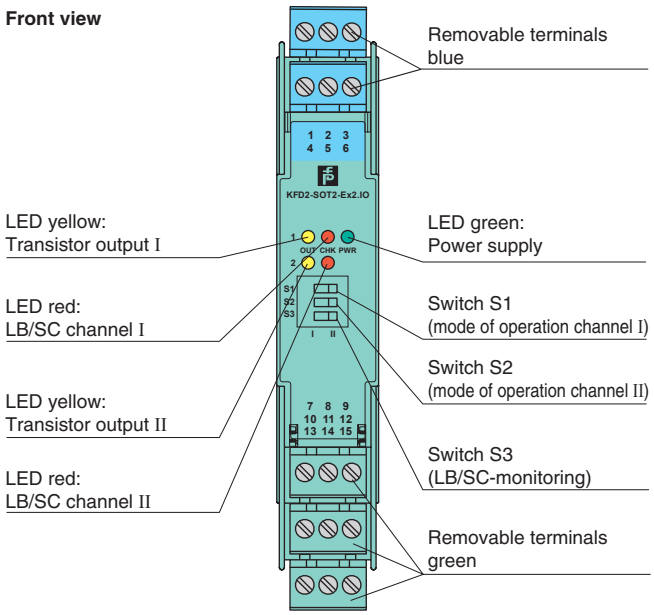

CE Ex SIL2

Connection

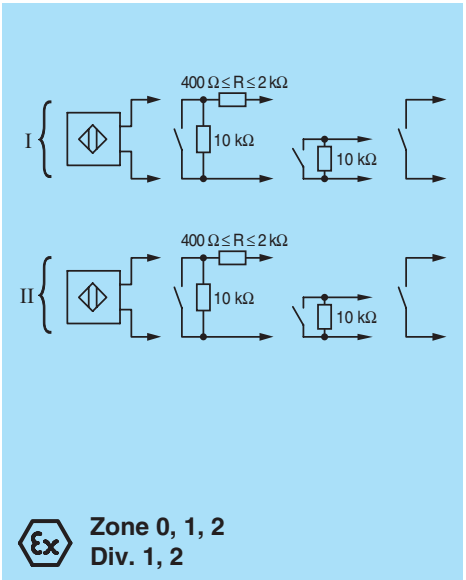

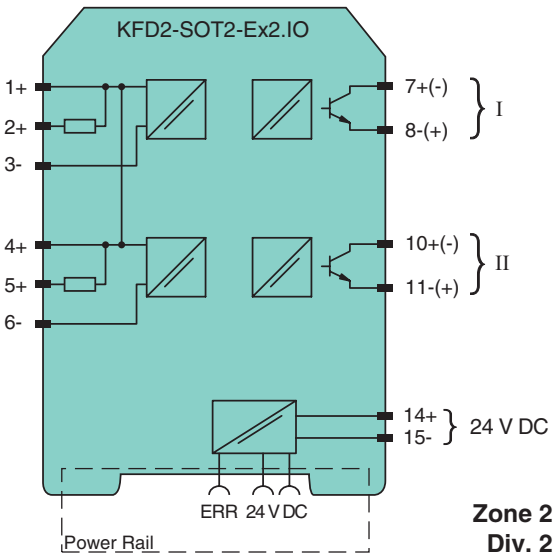

Release date 2013-08-06 16:34 Date of issue 2015-02-16 181007_eng.xml

General specifications		
Signal type		Digital Input
Supply		
Connection		Power Rail or terminals 14+, 15-
Rated voltage	U_n	20 ... 30 V DC
Ripple		≤ 10 %
Rated current	I_n	≤ 50 mA
Input		
Connection		terminals 1+, 2+, 3-; 4+, 5+, 6-
Rated values		acc. to EN 60947-5-6 (NAMUR), see system description for electrical data
Open circuit voltage/short-circuit current		approx. 8 V DC / approx. 8 mA
Switching point/switching hysteresis		1.2 ... 2.1 mA / approx. 0.2 mA
Line fault detection		breakage I ≤ 0.1 mA , short-circuit I > 6 mA
Output		
Connection		output I: terminals 7, 8 ; output II: terminals 10, 11
Switching voltage		≤ 30 V
Switching current		≤ 100 mA , short-circuit protected
Signal level		1-signal: switching voltage - 2.5 V max. at 10 mA switching current or 3 V max. at 100 mA switching current 0-signal: switched off (off-state current ≤ 10 µA)
Output I, II		signal ; electronic output, passive
Collective error message		Power Rail
Transfer characteristics		
Switching frequency		≤ 5 kHz
Electrical isolation		
Input/Output		reinforced insulation acc. to IEC 62103, rated insulation voltage 300 V_{rms}
Input/power supply		reinforced insulation acc. to IEC 62103, rated insulation voltage 300 V_{rms}
Output/power supply		basic insulation according to IEC 62103, rated insulation voltage 50 V_{eff}
Input/input		not available
Output/Output		basic insulation according to IEC 62103, rated insulation voltage 50 V_{eff}
Directive conformity		
Electromagnetic compatibility		
Directive 2004/108/EC		EN 61326-1:2006
Conformity		
Electrical isolation		IEC 62103:2003
Electromagnetic compatibility		NE 21:2004
Degree of protection		IEC 60529:2001
Input		EN 60947-5-6:2000
Ambient conditions		
Ambient temperature		-20 ... 60 °C (-4 ... 140 °F)
Mechanical specifications		
Degree of protection		IP20
Mass		approx. 150 g
Dimensions		20 x 119 x 115 mm (0.8 x 4.7 x 4.5 in) , housing type B2
Mounting		on 35 mm DIN mounting rail acc. to EN 60715:2001
Data for application in connection with Ex-areas		
EC-Type Examination Certificate		PTB 00 ATEX 2035 , for additional certificates see www.pepperl-fuchs.com
Group, category, type of protection		⟨Ex⟩ II (1) G [Ex ia] IIC ⟨Ex⟩ II (1) D [Ex ia] IIIC
Input		Ex ia IIC, Ex ia IIIC
Voltage	U_o	10.5 V
Current	I_o	13 mA
Power	P_o	34 mW (linear characteristic)
Supply		
Maximum safe voltage	U_m	40 V DC (Attention! The rated voltage can be lower.)
Type of protection [EEx ia and EEx ib]		
Output		
Maximum safe voltage	U_m	40 V DC (Attention! The rated voltage can be lower.)
EC-Type Examination Certificate		DMT 01 ATEX E 133
Group, category, type of protection		⟨Ex⟩ I (M1) [Ex ia] I
Statement of conformity		TÜV 99 ATEX 1499 X , observe statement of conformity
Group, category, type of protection, temperature class		⟨Ex⟩ II 3G Ex nA II T4
Electrical isolation		
Input/Output		safe electrical isolation acc. to IEC/EN 60079-11, voltage peak value 375 V

Release date 2013-08-06 16:34 Date of issue 2015-02-16 181007_eng.xml

Input/power supply	safe electrical isolation acc. to IEC/EN 60079-11, voltage peak value 375 V
Directive conformity	
Directive 94/9/EC	EN 60079-0:2012 , EN 60079-11:2012 , EN 60079-15:2010 , EN 50303:2000
International approvals	
FM approval	
Control drawing	116-0035
CSA approval	
Control drawing	116-0047
IECEx approval	IECEx PTB 05.0011
Approved for	[Ex ia] IIC , [Ex ia] I , [Ex ia] IIIC
General information	
Supplementary information	EC-Type Examination Certificate, Statement of Conformity, Declaration of Conformity, Attestation of Conformity and instructions have to be observed where applicable. For information see www.pepperl-fuchs.com.

Release date 2013-08-06 16:34 Date of issue 2015-02-16 181007_eng.xml

Configuration

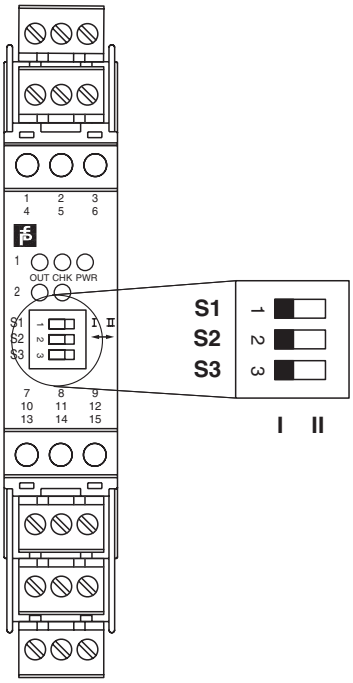

Switch position

S	Function		Position
1	Mode of operation Output I active	with high input current	I
		with low input current	II
2	Mode of operation Output II active	with high input current	I
		with low input current	II
3	Line fault detection	ON	I
		OFF	II

Operating status

Control circuit	Input signal
Initiator high impedance/ contact opened	low input current
Initiator low impedance/ contact closed	high input current
Lead breakage, lead short-circuit	Line fault

Factory settings: switch 1, 2 and 3 in position I

Accessories

Power feed modules KFD2-EB2...

The power feed module is used to supply the devices with 24 V DC via the Power Rail. The fuse-protected power feed module can supply up to 100 individual devices depending on the power consumption of the devices. A galvanically isolated mechanical contact uses the Power Rail to transmit collective error messages.

Power Rail UPR-03

The Power Rail UPR-03 is a complete unit consisting of the electrical inset and an aluminium profile rail 35 mm x 15 mm. To make electrical contact, the devices are simply engaged.

The Power Rail must not be fed via the device terminals of the individual devices!

Release date 2013-08-06 16:34 Date of issue 2015-02-16 181007_eng.xml