- 4-channel isolated barrier
- 24 V DC supply (Power Rail)
- Dry contact or NAMUR inputs
- 50 % less wiring, 2:1 technology
- Relay contact output
- Line fault detection (LFD)
- Reversible mode of operation

KFD2-SRA-Ex4

This isolated barrier is used for intrinsic safety applications. It transfers digital signals (NAMUR sensors/mechanical contacts) from a hazardous area to a safe area.

Each sensor or switch controls one form A normally open relay contact for the safe area load. A special 2:1 wire-saving technology is available on this isolator, reducing field wiring by 50 %.

Switch S1 is used to enable or disable line fault detection of the field circuit. The 2:1 mode is selected with switch S2 while the remaining switches, S3 ... S6, are used for reversing the normal output state of the relays.

A unique collective error messaging feature is available when used with the Power Rail system.

Connection

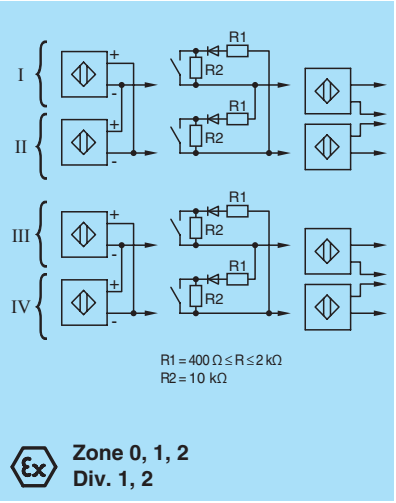

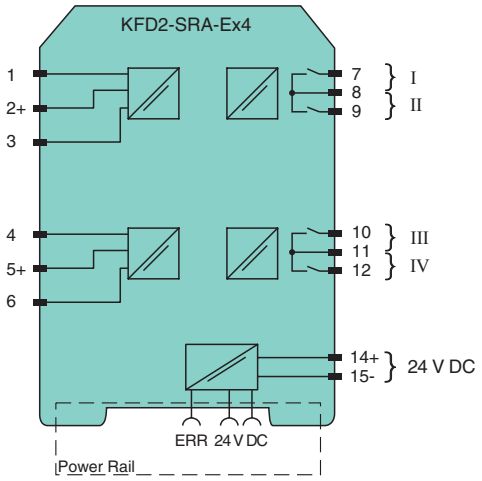

Composition

Front view

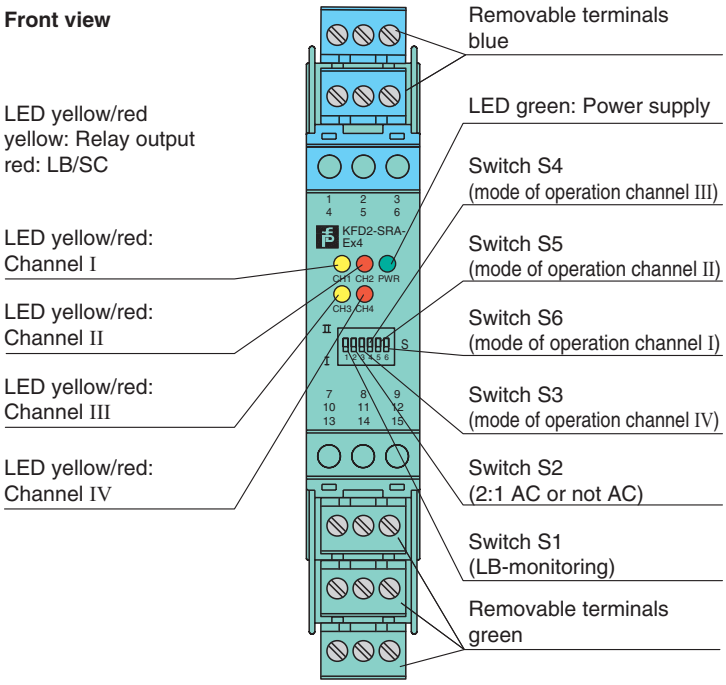

Release date 2010-09-28 14:56 Date of issue 2010-09-28 050988_ENG.xml

Subject to reasonable modifications due to technical advances. Copyright Pepperl+Fuchs, Printed in Germany

General specifications		
Signal type		Digital input
Supply		
Connection		Power Rail or terminals 14+, 15-
Rated voltage		20 ... 30 V DC
Ripple		≤ 10 %
Rated current		45 ... 70 mA
Power loss		1.2 W
Input		
Connection		terminals 1-, 2+, 3-; 4-, 5+, 6-
Rated values		acc. to EN 60947-5-6 (NAMUR), see system description for electrical data
Open circuit voltage/short-circuit current		approx. 8 V DC / approx. 8 mA
Switching point/switching hysteresis		1.2 ... 2.1 mA / approx. 0.2 mA
Pulse/Pause ratio		≥ 35 ms / ≥ 35 ms (non-AC operation) ≥ 70 ms / ≥ 70 ms (AC operation)
Lead monitoring		breakage I ≤ 0.15 mA
Output		
Connection		output I: terminals 7, 8 ; output II: terminals 8, 9 ; output III: terminals 10, 11 ; output IV: terminals 11, 12
Collective error message		Power Rail
Output I up to IV		Signal I ... Signal IV ; relay
Contact loading		253 V AC/2 A /cos ϕ > 0.7; 40 V DC/2 A resistive load;
Energized/De-energized delay		approx. 30 ms / approx. 30 ms
Mechanical life		5 x 10^6 switching cycles
Transfer characteristics		
Switching frequency		≤ 10 Hz (non-AC operation) ≤ 3 Hz (AC operation)
Electrical isolation		
Output/power supply		basic insulation according to IEC 62103, rated insulation voltage 50 V_{eff}
Output/Output		basic insulation according to IEC 62103, rated insulation voltage 50 V_{eff}
Directive conformity		
Electromagnetic compatibility		
Directive 89/336/EEC		EN 61326
Low voltage		
Directive 73/23/EEC		EN 50178
Conformity		
Electromagnetic compatibility		NE 21
Protection degree		IEC 60529
Protection against electric shock		IEC 61140
Ambient conditions		
Ambient temperature		-20 ... 60 °C (-4 ... 140 °F)
Mechanical specifications		
Protection degree		IP20
Mass		approx. 150 g
Dimensions		20 x 119 x 115 mm (0.8 x 4.7 x 4.5 in) , housing type B2
Data for application in connection with Ex-areas		
EC-Type Examination Certificate		ZELM 99 ATEX 0009 , for additional certificates see www.pepperl-fuchs.com
Group, category, type of protection		⟨Ex⟩ II (1)GD [EEx ia] IIC [circuit(s) in zone 0/1/2]
Input		EEx ia IIC
Voltage	U_o	10 V
Current	I_o	14 mA
Power	P_o	35 mW (linear characteristic)
Supply		
Maximum safe voltage U_m		40 V DC (Attention! U_m is no rated voltage.)
Output		
Contact loading		230 V AC + 10 % / 3 A / 100 VA / cos ϕ ≥ 0.7; 40 V DC / 2 A resistive load
Maximum safe voltage U_m		40 V DC (Attention! The rated voltage can be lower.)
Electrical isolation		
Input/input		not available
Input/Output		safe galvanic isolation acc. to EN 50020, voltage peak value 375 V
Input/power supply		safe galvanic isolation acc. to EN 50020, voltage peak value 375 V
Directive conformity		
Directive 94/9/EC		EN 50014, EN 50020
International approvals		
UL approval		E106378
Control drawing		116-0145
General information		

Release date 2010-09-28 14:56 Date of issue 2010-09-28 050988_ENG.xml

Subject to reasonable modifications due to technical advances. Copyright Pepperl+Fuchs, Printed in Germany

Supplementary information	EC-Type Examination Certificate, Statement of Conformity, Declaration of Conformity, Attestation of Conformity and instructions have to be observed where applicable. For information see www.pepperl-fuchs.com.

Release date 2010-09-28 14:56 Date of issue 2010-09-28 050988_ENG.xml

Subject to reasonable modifications due to technical advances. Copyright Pepperl+Fuchs, Printed in Germany

Notes

Accessories

Power feed modules KFD2-EB2...

The power feed module is used to supply the devices with 24 V DC via the Power Rail. The fuse-protected power feed module can supply up to 100 individual devices depending on the power consumption of the devices. A galvanically isolated mechanical contact uses the Power Rail to transmit collective error messages.

Power Rail UPR-03

The Power Rail UPR-03 is a complete unit consisting of the electrical inset and an aluminium profile rail 35 mm x 15 mm. To make electrical contact, the devices are simply engaged.

The Power Rail must not be fed via the device terminals of the individual devices!

External diodes (field installation) F-KD-Ex2 (diode) and F-KDR-Ex2 (diode and resistor)

The switch amplifier transfers binary signals from the hazardous area by means of the patented new 2:1-transfer method. This method allows to transfer two independent binary signals by means of a single pair of conductors.
The prerequisite for the use of the 2:1-transfer method is that sensors with reverse polarity protected diode are used. Pepperl+Fuchs offers suitable sensors for alternating polarity (see table). When using sensors without integrated reverse polarity protection diode, external diodes F-KD-Ex2 have to be fitted.In case of F-KDR-Ex2, a resistor combination has been fitted in addition for line fault detection of mechanical switches.

Comments:
When installing a serial diode, it has to be assured that the current in reverse direction is below a value of 0.15 mA in order to enable the lead monitoring.

Functions of the switch

Line fault detection	Pos.	Input	
II I S1 S2 S3 S4 S5 S6	I	1 kΩ, 10 kΩ	Line fault detection
II I S1 S2 S3 S4 S5 S6	II		Line fault detection

AC function	Pos.	Input	
II I S1 S2 S3 S4 S5 S6	I	1, 3	AC function (2:1 transfer technique)
II I S1 S2 S3 S4 S5 S6	II	1-, 2+, 3-	none AC function

Mode of operation	Pos.	Input	
II I S1 S2 S3 S4 S5 S6 S3: channel IV S4: channel III S5: channel II S6: channel I	I	1 signal / 0 signal	energised / de-energised
II I S1 S2 S3 S4 S5 S6 S3: channel IV S4: channel III S5: channel II S6: channel I	II	0 signal / 1 signal	energised / de-energised

Release date 2010-09-28 14:56 Date of issue 2010-09-28 050988_ENG.xml

Subject to reasonable modifications due to technical advances. Copyright Pepperl+Fuchs, Printed in Germany

Pepperl+Fuchs sensors for alternating polarity

Model number	External diode necessary	Operating temperature T_u/°C
FJ 6-110-F	yes	-25 °C ... 100 °C
FJ 7-N	yes	-25 °C ... 100 °C
NCB1,5-6,5M25-NO	no	-25 °C ... 70 °C
NCB1,5-6,5M25-NO-V1	no	-25 °C ... 70 °C
NCB1,5-8GM25-NO	no	-25 °C ... 70 °C
NCB1,5-8GM25-NO 1OM	no	-25 °C ... 70 °C
NCB1,5-8GM25-NO 5M	no	-25 °C ... 70 °C
NCB1,5-8GM25-NO-V1	no	-25 °C ... 70 °C
NCB2-12GM35-NO	no	-25 °C ... 70 °C
NCB2-12GM35-NO 1OM	no	-25 °C ... 70 °C
NCN15-30GM40-N0-V1	no	-25 °C ... 70 °C
NCN15-M1K-N0	no	-25 °C ... 70 °C
NCN20+U1+N0	no	-25 °C ... 70 °C
NCN30+U1+N0	no	-25 °C ... 70 °C
NCN3-F24L-N4	no	-25 °C ... 70 °C
NCN3-F24R-N4	no	-25 °C ... 70 °C
NCN3-F25F-N4-V1	no	-25 °C ... 70 °C
NCN3-F25-N4-014	no	-25 °C ... 70 °C
NCN3-F25-N4-075	no	-25 °C ... 70 °C
NCN3-F25-N4-V1	no	-25 °C ... 70 °C
NCN3-F31-N4-K	no	-25 °C ... 70 °C
NCN3-F31-N4-K-K	no	-25 °C ... 70 °C
NCN3-F31-N4-V16-V16	no	-25 °C ... 70 °C
NCN3-F31-N4-V18	no	-25 °C ... 70 °C
NCN40+U1+N0	no	-25 °C ... 70 °C
NCN4-12GM35-NO	no	-25 °C ... 70 °C
NCN4-12GM35-NO 1OM	no	-25 °C ... 70 °C
NCN4-12GM35-NO 5M	no	-25 °C ... 70 °C
NCN4-12GM35-NO-V1	no	-25 °C ... 70 °C
NCN4-M3K-N4	no	-25 °C ... 70 °C
NCN8-18GM4O-NO	no	-25 °C ... 70 °C
NCN8-18GM4O-NO 5M	no	-25 °C ... 70 °C
NCN8-18GM4O-NO-V1	no	-25 °C ... 70 °C
NJ 0,8-4,5-N	no	-25 °C ... 100 °C
NJ 0,8-5GM-N	no	-25 °C ... 100 °C
NJ 0,8-5GM-N 5M	no	-25 °C ... 100 °C
NJ 0,8-5GM-N 10M	no	-25 °C ... 100 °C
NJ 0,8-F-N	yes	-25 °C ... 100 °C
NJ 1,5-6,5-N	no	-25 °C ... 100 °C
NJ 1,5-6,5-N 15M	no	-25 °C ... 100 °C
NJ 1,5-6,5-N 5M	no	-25 °C ... 100 °C
NJ 1,5-8GM-N	no	-25 °C ... 100 °C
NJ 1,5-8GM-N 10M	no	-25 °C ... 100 °C
NJ 1,5-8GM-N 5M	no	-25 °C ... 100 °C
NJ 1,5-8GM-N-V1	no	-25 °C ... 100 °C
NJ 1,5-F-N	yes	-25 °C ... 100 °C
NJ 1-N2-G 82	yes	-25 °C ... 100 °C
NJ 1-N-728	no	-25 °C ... 70 °C
NJ 2,5-F-N	yes	-25 °C ... 100 °C
NJ 2-11-N	no	-25 °C ... 100 °C
NJ 2-11-N 5M	no	-25 °C ... 100 °C
NJ 2-11-N-G	no	-25 °C ... 100 °C
NJ 2-11-N-G 15M	no	-25 °C ... 100 °C
NJ 2-11-N-G 5M	no	-25 °C ... 100 °C

Model number	External diode necessary	Operating temperature T_u/°C
NCB2-12GM35-NO 5M	no	-25 °C ... 70 °C
NCB2-12GM35-NO-V1	no	-25 °C ... 70 °C
NCB5-18GM4O-NO	no	-25 °C ... 70 °C
NCB5-18GM4O-NO 1OM	no	-25 °C ... 70 °C
NCB5-18GM4O-NO 5M	no	-25 °C ... 70 °C
NCB5-18GM4O-NO-V1	no	-25 °C ... 70 °C
NCB10-30GM40-N0	no	-25 °C ... 70 °C
NCB10-30GM40-N0-V1	no	-25 °C ... 70 °C
NCB15+U1+N0	no	-25 °C ... 70 °C
NCN15-30GM40-N0	no	-25 °C ... 70 °C
NJ 2-N-H42	yes	-25 °C ... 100 °C
NJ 2-V3-N	yes	-25 °C ... 100 °C
NJ 2-V3-N-V5	yes	-25 °C ... 100 °C
NJ 3-18GK-S1N	no	-25 °C ... 100 °C
NJ 4-12GK-N	no	-25 °C ... 100 °C
NJ 4-12GK-N 10M	no	-25 °C ... 100 °C
NJ 4-12GK-N 5M	no	-25 °C ... 100 °C
NJ 4-12GM-N	no	-25 °C ... 100 °C
NJ 4-12GM-N 10M KA	no	-25 °C ... 100 °C
NJ 4-12GM-N 15M	no	-25 °C ... 100 °C
NJ 4-12GM-N 20M	no	-25 °C ... 100 °C
NJ 4-12GM-N 5M	no	-25 °C ... 100 °C
NJ 4-12GM-N-V1	no	-25 °C ... 100 °C
NJ 4-F-N	yes	-25 °C ... 100 °C
NJ 4-N-H31	yes	-25 °C ... 100 °C
NJ 5-11-N	no	-25 °C ... 100 °C
NJ 5-11-N 15M KA.	no	-25 °C ... 100 °C
NJ 5-11-N 5M KA.	no	-25 °C ... 100 °C
NJ 5-11-N-G	no	-25 °C ... 100 °C
NJ 5-11-N-G 10M KA.	no	-25 °C ... 100 °C
NJ 5-11-N-G 5M KA.	no	-25 °C ... 100 °C
NJ 5-11-N-G 6M	no	-25 °C ... 100 °C
NJ 5-18GK-N	no	-25 °C ... 100 °C
NJ 5-18GK-N 10M KA	no	-25 °C ... 100 °C
NJ 5-18GK-N 5M KA.	no	-25 °C ... 100 °C
NJ 5-18GK-SN	yes	-25 °C ... 100 °C
NJ 5-18GK-SN 5M KA.	yes	-25 °C ... 100 °C
NJ 5-18GK-SN 10M	yes	-25 °C ... 100 °C
NJ 5-18GM-N	no	-25 °C ... 100 °C
NJ 5-18GM-N 10M KA	no	-25 °C ... 100 °C
NJ 5-18GM-N 5M KA.	no	-25 °C ... 100 °C
NJ 5-18GM-N-V1	no	-25 °C ... 100 °C
NJ 5-30GK-S1N	yes	-25 °C ... 100 °C
NJ 5-30GK-S1N 10M	yes	-25 °C ... 100 °C
NJ 5-30GK-S1N 5M	yes	-25 °C ... 100 °C
NJ 6-22-SN	yes	-25 °C ... 100 °C
NJ 6-22-SN 10M	yes	-25 °C ... 100 °C
NJ 6-22-SN-G	yes	-25 °C ... 100 °C
NJ 6-22-SN-G 10M	yes	-25 °C ... 100 °C
NJ 6-22-SN-G 3M	yes	-25 °C ... 100 °C
NJ 6-F-N	yes	-25 °C ... 100 °C
NJ 6S1+U1+N1	yes	-25 °C ... 100 °C
NJ 8-18GK-N	no	-25 °C ... 100 °C
NJ 8-18GK-N 10M KA.	no	-25 °C ... 100 °C

Release date 2010-09-28 14:56 Date of issue 2010-09-28 050988_ENG.xml

Subject to reasonable modifications due to technical advances. Copyright Pepperl+Fuchs, Printed in Germany

Model number	External diode necessary	Operating temperature T_u/°C
NJ 2-11-SN	yes	-25 °C ... 100 °C
NJ 2-11-SN	yes	-25 °C ... 100 °C
NJ 2-11-SN-G	yes	-25 °C ... 100 °C
NJ 2-11-SN-G 10M	yes	-25 °C ... 100 °C
NJ 2-11-SN-G 5M	yes	-25 °C ... 100 °C
NJ 2-12GK-N	no	-25 °C ... 100 °C
NJ 2-12GK-N 5M	no	-25 °C ... 100 °C
NJ 2-12GM-N	no	-25 °C ... 100 °C
NJ 2-12GM-N 10M	no	-25 °C ... 100 °C
NJ 2-12GM-N 21M	no	-25 °C ... 100 °C
NJ 2-12GM-N 5M	no	-25 °C ... 100 °C
NJ 2-12GM-N-V1	no	-25 °C ... 100 °C
NJ 2-F1-N	yes	-25 °C ... 100 °C
NJ 40+U1+N	yes	-25 °C ... 100 °C
RJ 10-14-N	yes	-25 °C ... 100 °C
RJ 10-N	yes	-25 °C ... 100 °C
RJ 15-14-N	yes	-25 °C ... 100 °C
RJ 15-N	yes	-25 °C ... 100 °C
RJ 21-N	yes	-25 °C ... 100 °C
RJ 43-N	yes	-25 °C ... 100 °C
SC2-N0	no	-25 °C ... 100 °C
SC3,5-N0	no	-25 °C ... 100 °C
SC3,5-N0 BLAU	no	-25 °C ... 100 °C
SC3,5-N0 GELB	no	-25 °C ... 100 °C
SC3,5-N0 GRÜN	no	-25 °C ... 100 °C
SC3,5-N0 WEIß	no	-25 °C ... 100 °C
SJ 2-N	no	-25 °C ... 100 °C
SJ 2-N 5M KA	no	-25 °C ... 100 °C
SJ 2-SN	yes	-25 °C ... 100 °C

Model number	External diode necessary	Operating temperature T_u/°C
NJ 8-18GM-N	no	-25 °C ... 100 °C
NJ 8-18GM-N 5M	no	-25 °C ... 100 °C
NJ 8-18GM-N-V1	no	-25 °C ... 100 °C
NJ 10-F-N	yes	-25 °C ... 100 °C
NJ 15+U1+N	yes	-25 °C ... 100 °C
NJ 15-M1K-N	yes	-25 °C ... 100 °C
NJ 15-M1-N	yes	-25 °C ... 100 °C
NJ 15-M1-N-V	yes	-25 °C ... 100 °C
NJ 15S+U1+N	yes	-25 °C ... 100 °C
NJ 20+U1+N	yes	-25 °C ... 100 °C
NJ 20S+U1+N	yes	-25 °C ... 100 °C
NJ 30+U1+N	yes	-25 °C ... 100 °C
NJ 30P+U1+1N	yes	-25 °C ... 100 °C
SJ 2-SN XM KA	yes	-25 °C ... 100 °C
SJ 3,5-G-N	no	-25 °C ... 100 °C
SJ 3,5-N	no	-25 °C ... 100 °C
SJ 3,5-N BLAU	no	-25 °C ... 100 °C
SJ 3,5-N GELB	no	-25 °C ... 100 °C
SJ 3,5-N GRÜN	no	-25 °C ... 100 °C
SJ 3,5-N LED	yes	-25 °C ... 100 °C
SJ 3,5-N WEISS	no	-25 °C ... 100 °C
SJ 3,5-S1N	yes	-25 °C ... 100 °C
SJ 3,5-SN	yes	-25 °C ... 100 °C
SJ 5 MIT LÖTSTIFTEN	yes	-25 °C ... 100 °C
SJ 5-G-N	yes	-25 °C ... 100 °C
SJ 5-K-N	yes	-25 °C ... 100 °C
SJ 5-N	yes	-25 °C ... 100 °C
SJ 10-N	yes	-25 °C ... 100 °C
SJ 15-N	yes	-25 °C ... 100 °C

Release date 2010-09-28 14:56 Date of issue 2010-09-28 050988_ENG.xml

Subject to reasonable modifications due to technical advances. Copyright Pepperl+Fuchs, Printed in Germany