- 2-channel
- Control circuit EEx ia IIC
- 24 V DC nominal supply voltage
- Reversible mode of operation
- Lead breakage (LB) and short-circuit (SC) monitoring
- 1 active electronic output per channel
- EMC acc. to NAMUR NE 21

24 V DC

KFD2-ST-Ex2

Successor KFD2-ST2-Ex2

Connection

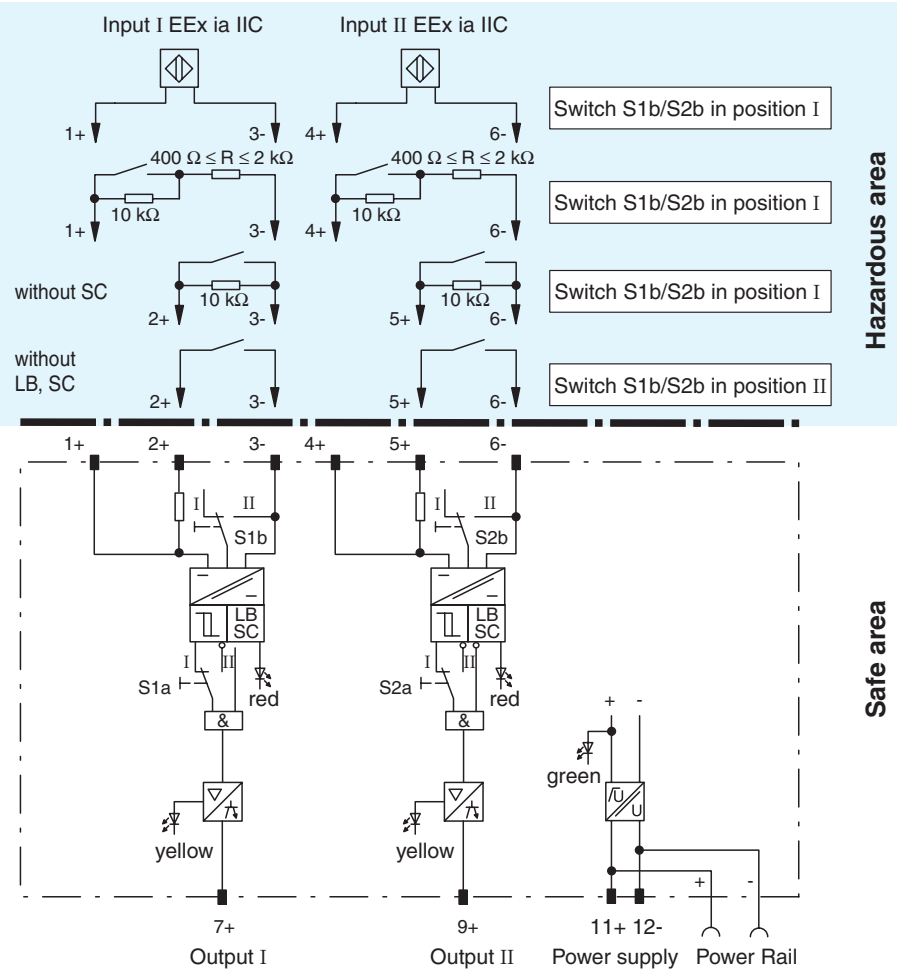

Composition

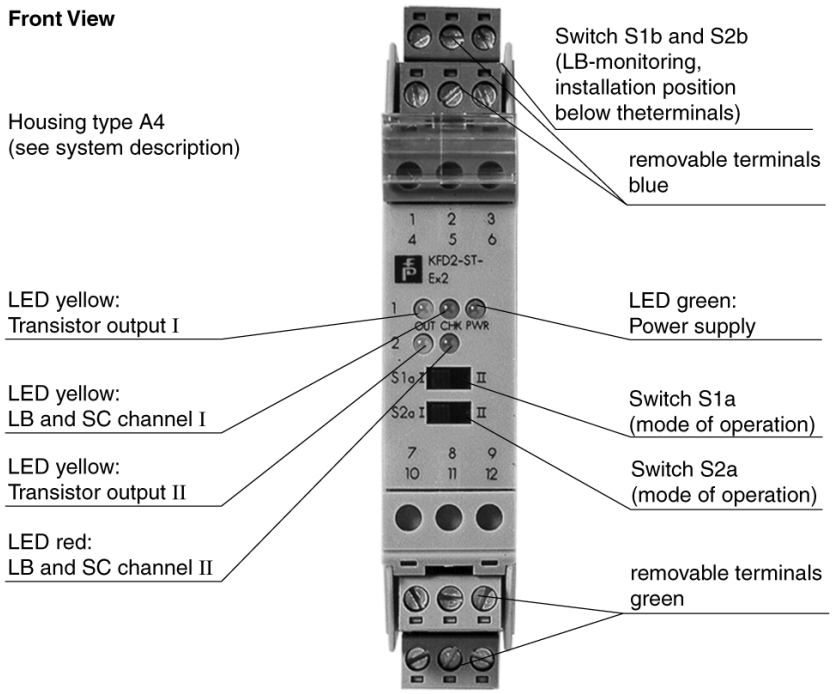

Release date 2010-05-12 09:44 Date of issue 2010-05-12 036676_ENG.xml

Subject to reasonable modifications due to technical advances.
Copyright Pepperl+Fuchs, Printed in Germany

General specifications		
Signal type		Digital input
Supply		
Connection		Power Rail or terminals 11+, 12-
Rated voltage		20 ... 35 V DC
Ripple		≤ 10 %
Rated current		≤ 20 mA
Power loss		< 600 mW
Power consumption		< 600 mW
Input		
Connection		terminals 1+, 2+, 3-; 4+, 5+, 6-
Open circuit voltage/short-circuit current		approx. 8 V DC / approx. 8 mA
Switching point/switching hysteresis		1.2 ... 2.1 mA / approx. 0.2 mA
Lead monitoring		breakage I ≤ 0.1 mA , short-circuit I > 6 mA
Output		
Connection		output I: terminals 7+ , output II: terminals 9+
Current		100 mA , short-circuit proof
Signal level		1-signal: (L+) -3.5 V / 0-signal: switched off (off-state current ≤ 10 µA)
Output I		electronic output, active
Output II		electronic output, active
Transfer characteristics		
Switching frequency		≤ 5 kHz
Electrical isolation		
Output/power supply		not available
Output/Output		not available
Directive conformity		
Electromagnetic compatibility		
Directive 2004/108/EC		EN 61326-1:2006
Ambient conditions		
Ambient temperature		-20 ... 60 °C (-4 ... 140 °F)
Mechanical specifications		
Protection degree		IP20
Mass		approx. 150 g
Data for application in connection with Ex-areas		
EC-Type Examination Certificate		PTB 00 ATEX 2082 , for additional certificates see www.pepperl-fuchs.com
Group, category, type of protection		⟨Ex⟩ II (1)GD [EEx ia] IIC [circuit(s) in zone 0/1/2]
Input		EEx ia IIC
Voltage	U_o	12.7 V
Current	I_o	17.3 mA
Power	P_o	55 mW (linear characteristic)
Supply		
Maximum safe voltage U_m		253 V AC / 125 V DC (Attention! U_m is no rated voltage.)
Output		
Maximum safe voltage U_m		60 V AC (Attention! The rated voltage can be lower.)
Electrical isolation		
Input/input		safe electrical isolation acc. to EN 50020, voltage peak value 30 V
Input/Output		safe galvanic isolation acc. to EN 50020, voltage peak value 375 V
Input/power supply		safe galvanic isolation acc. to EN 50020, voltage peak value 375 V
Directive conformity		
Directive 94/9/EC		EN 50014, EN 50020

Function

The transformer isolated barrier transfers digital signals from the hazardous area. Sensors per DIN EN 60947-5-6 (NAMUR) and mechanical contacts may be used as alarms. Control circuits are monitored for lead breakage (LB) and short circuit (SC). The external faults are indicated according to NAMUR NE44 by a red flashing LED.
The intrinsically safe input is per DIN EN 50020 safely isolated from the output and the power supply. Both transistor outputs are galvanically connected to each other and the power supply.

Release date 2010-05-12 09:44 Date of issue 2010-05-12 036676_ENG.xml

Subject to reasonable modifications due to technical advances. Copyright Pepperl+Fuchs, Printed in Germany

Supplementary information

EC-Type Examination Certificate, Statement of Conformity, Declaration of Conformity and instructions have to be observed. For information see www.pepperl-fuchs.com.

Accessories

Power Rail PR-03
Power Rail UPR-03
Power feed module KFD2-EB2...

Using Power Rail PR-03 or UPR-03 the devices are supplied with 24 V DC by means of the power feed modules. If no Power Rails are used, power supply of the individual devices is possible directly via their device terminals.

Each power feed module is used for fusing and monitoring groups with up to 100 individual devices. The Power Rail PR-03 is an inset component for the DIN rail. The Power Rail UPR-03 is a complete unit consisting of the electrical inset and an aluminium profile rail 35 mm x 15 mm x 2000 mm. To make electrical contact, the devices are simply engaged.

The Power Rail must not be fed via the device terminals of the individual devices!

Release date 2010-05-12 09:44 Date of issue 2010-05-12 036676_ENG.xml

Subject to reasonable modifications due to technical advances. Copyright Pepperl+Fuchs, Printed in Germany