Features

- 1-channel signal conditioner
- 24 V DC supply (Power Rail)
- Input 2-wire and 3-wire SMART transmitters and 2-wire SMART current sources
- Signal splitter (1 input and 2 outputs)
- Dual output 0/4 mA ... 20 mA
- Terminal blocks with test sockets
- Up to SIL3 acc. to IEC 61508

Function

This signal conditioner provides the isolation for non-intrinsically safe applications.

The device supplies 2-wire and 3-wire SMART transmitters, and can also be used with 2-wire SMART current sources.

It transfers the analog input signal to the safe area as two isolated current values.

Digital signals may be superimposed on the input signal and are transferred bi-directionally.

If the HART communication resistance in the loop is too low, the internal resistance of 250 Ω between terminals 8, 9 and 11, 12 can be used.

Test sockets for the connection of HART communicators are integrated into the terminals of the device.

Application

The device supports the following SMART protocols:

- HART
- BRAIN
- Foxboro

Assembly

Front view

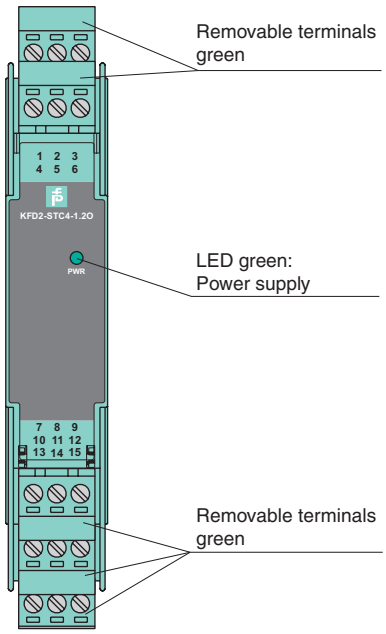

Connection

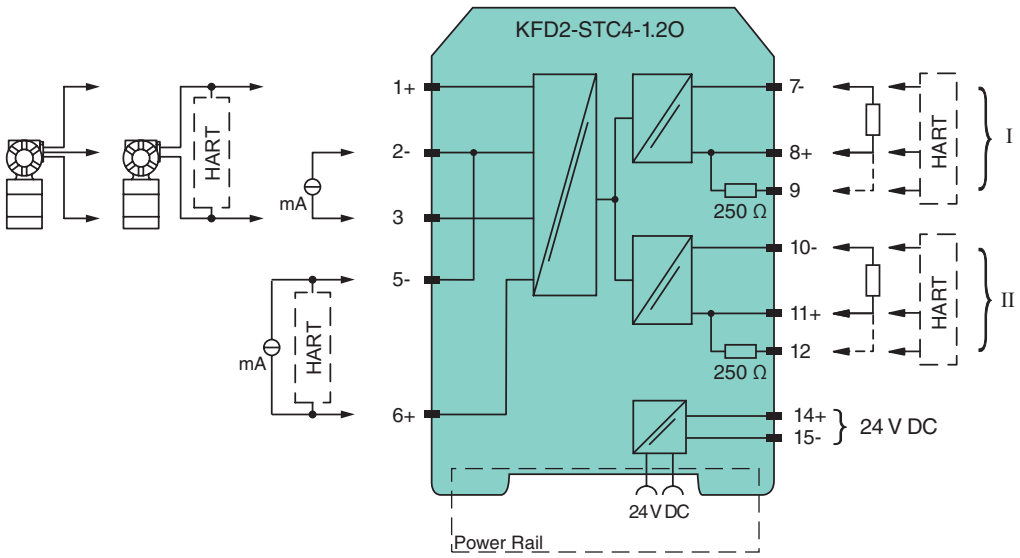

Release date 2013-08-07 15:41 Date of issue 2015-02-16 228739_eng.xml

General specifications	
Signal type	Analog input
Supply	
Connection	Power Rail or terminals 14+, 15-
Rated voltage U_n	20 ... 35 V DC
Ripple	within the supply tolerance
Power loss	1.8 W
Power consumption	2.4 W
Input	
Connection	terminals 1+, 2-, 3 or 5-, 6+
Input signal	0/4 ... 20 mA
Open circuit voltage/short-circuit current	terminals 1+, 3-: 22.7 V / 38 mA
Voltage drop	terminals 5, 6 : ≤ 2.4 V at 20 mA
Input resistance	terminals 2-, 3: ≤ 76 Ω terminals 1+, 3: ≤ 500 Ω (250 Ω load)
Available voltage	terminals 1+, 3: ≥ 16 V at 20 mA
Output	
Connection	terminals 7-, 8+,9; 10-, 11+,12
Load	0 ... 550 Ω
Output signal	0/4 ... 20 mA (overload > 25 mA)
Ripple	≤ 50 µA $_{eff}$
Transfer characteristics	
Deviation	at 20 °C (68 °F), 0/4 ... 20 mA ≤ ± 10 µA incl. calibration, linearity, hysteresis, loads and supply voltage fluctuations
Influence of ambient temperature	≤ 20 ppm/K
Frequency range	input in output: bandwidth with 1 mA_{pp} signal 0 ... 7.5 kHz (-3 dB) output in input: band width with 1 V_{ss} signal 0.3 ... 7.5 kHz (-3 dB)
Settling time	200 µs
Rise time/fall time	20 µs
Electrical isolation	
Input/Output	basic insulation according to IEC 61010-1, rated insulation voltage 300 V_{eff}
Input/power supply	basic insulation according to IEC 61010-1, rated insulation voltage 300 V_{eff}
Output/power supply	functional insulation, rated insulation voltage 50 V AC
Output/Output	functional insulation, rated insulation voltage 50 V AC
Directive conformity	
Electromagnetic compatibility	
Directive 2004/108/EC	EN 61326-1:2006
Conformity	
Electromagnetic compatibility	NE 21:2011
Degree of protection	IEC 60529:2001
Protection against electrical shock	EN 61010-1:2010
Ambient conditions	
Ambient temperature	-20 ... 60 °C (-4 ... 140 °F)
Mechanical specifications	
Degree of protection	IP20
Mass	approx. 200 g
Dimensions	20 x 124 x 115 mm (0.8 x 4.9 x 4.5 in) , housing type B2
Mounting	on 35 mm DIN mounting rail acc. to EN 60715:2001
General information	
Note	Both output loads must be connected to ensure complete and correct operation within the technical specification.
Supplementary information	Statement of Conformity, Declaration of Conformity, Attestation of Conformity and instructions have to be observed where applicable. For information see www.pepperl-fuchs.com.

Configuration active output (source)

If only one output of the two outputs is used, a jumper have to be set as follows.

Release date 2013-08-07 15:41 Date of issue 2015-02-16 228739_eng.xml

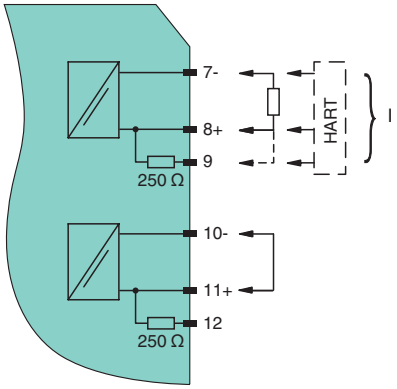

Accessories

Power feed module KFD2-EB2

The power feed module is used to supply the devices with 24 V DC via the Power Rail. The fuse-protected power feed module can supply up to 150 individual devices depending on the power consumption of the devices. Collective error messages received from the Power Rail activate a galvanically-isolated mechanical contact.

Power Rail UPR-03

The Power Rail UPR-03 is a complete unit consisting of the electrical insert and an aluminium profile rail 35 mm x 15 mm. To make electrical contact, the devices are simply engaged.

Profile Rail K-DUCT with Power Rail

The profile rail K-DUCT is an aluminum profile rail with Power Rail insert and two integral cable ducts for system and field cables. Due to this assembly no additional cable guides are necessary.



Power Rail and Profile Rail must not be fed via the device terminals of the individual devices!

Release date 2013-08-07 15:41 Date of issue 2015-02-16 228739_eng.xml