- 1-channel
- 2 galvanically isolated outputs
- 24 V DC supply voltage
- EMC acc. to NAMUR NE 21
- Up to SIL2 acc. to IEC 61508

Input 0/4 mA ... 20 mA
Output 0/4 mA ... 20 mA

KFD2-STC4-1.2O

Function

SMART transmitter power supplies provide a 2- or 3-wire SMART transmitter and transfer the analogue values.

Digital signals may be superimposed on the analogue values, which will transferred bidirectionally. Handheld terminals should be connected as shown in the block diagram.

An internal resistor at terminal 9 (at terminals 9 and 12 with version 2O) is available, which may be used to increase the AC impedance for the HART signal.

SMART transmitter power supplies are delivered with terminal type KF-STP-**. Jacks are integrated in these terminals for the connection of the handheld units.

Application

- The supply of power to the SMART transmitter and the transfer of the measurement current
- galvanically isolation of a current source
- suited for the following SMART systems:
  ABB, Endress+Hauser, Emerson, Fuji, Smar, VEGA, Yokogawa

Connection

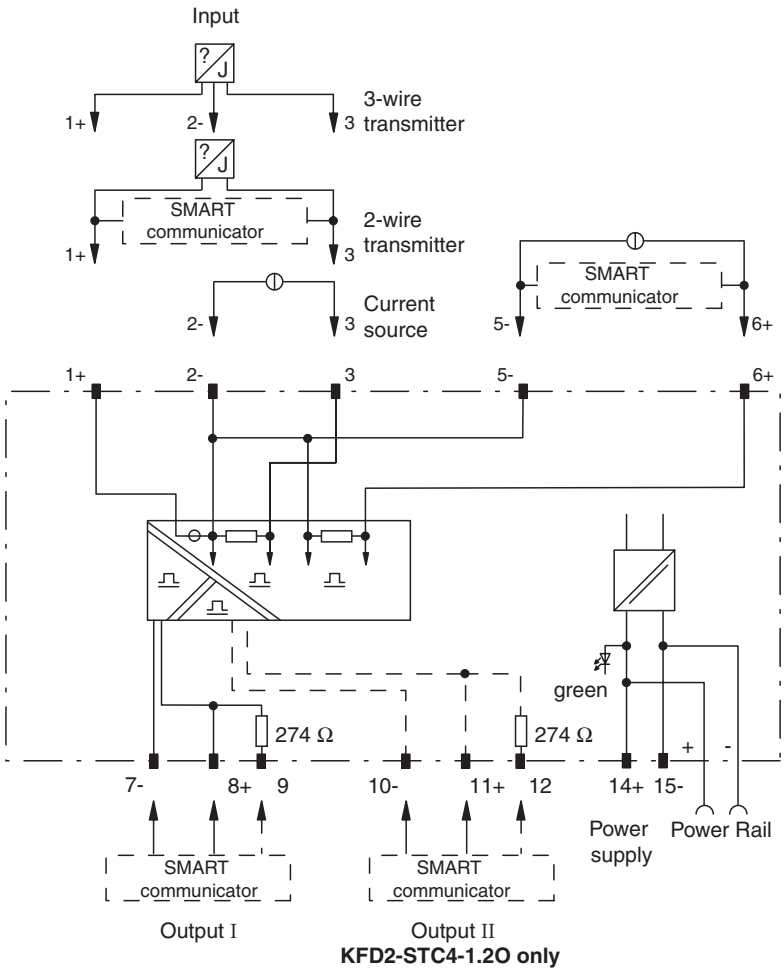

Composition

Front view

Housing type B2
(see system description)

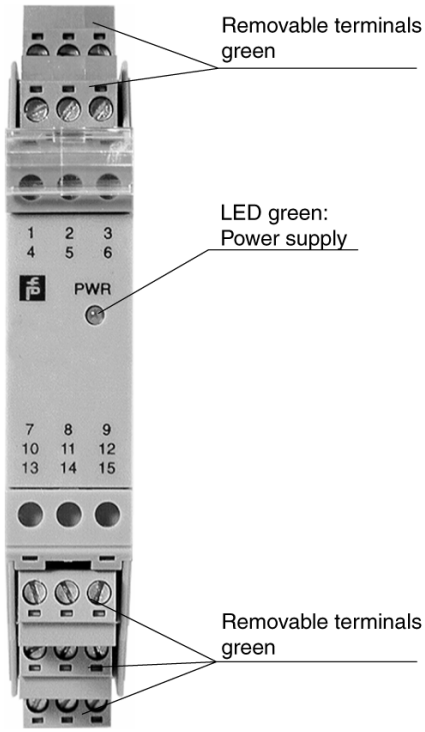

Release date 2010-01-04 14:20 Date of issue 2013-04-04 112670_eng.xml

Supply	
Connection	Power Rail or terminals 14+, 15-
Rated voltage	20 ... 35 V DC
Ripple	within the supply tolerance
Power loss	1.6 W
Power consumption	approx. 2.5 W
Input	
Connection	terminals 1+, 2-, 3 or 5-, 6+
Input signal	0/4 ... 20 mA
Input resistance	≤ 50 Ω terminals 2-, 3
Available voltage	≥ 15.7 V at 20 mA terminals 1+, 3
Ripple	≤ 50 mV_{ss} at 20 mA
Output	
Connection	terminals 7-, 8+,9; 10-, 11+,12
Load	0 ... 550 Ω
Output signal	0/4 ... 20 mA (overload > 25 mA)
Ripple	≤ 50 µA $_{eff}$
Transfer characteristics	
Deviation	at 20 °C (68 °F), 0/4 ... 20 mA ≤ ± 20 µA incl. calibration, linearity, hysteresis, loads and supply voltage fluctuations
Influence of ambient temperature	≤ 20 ppm/K
Frequency range	input in output: bandwidth with 1 mA_{pp} signal 0 ... 7.5 kHz (-3 dB) output in input: band width with 1 V_{ss} signal 0.3 ... 7.5 kHz (-3 dB)
Rise time	20 µs
De-energized delay	20 µs
Electrical isolation	
Input/Output	Basic insulation according to EN 50178, rated insulation voltage 253 V_{eff}
Input/power supply	Basic insulation according to EN 50178, rated insulation voltage 253 V_{eff}
Output/power supply	basic insulation acc. to EN 50178, rated insulation voltage of 50 V AC
Directive conformity	
Electromagnetic compatibility	
Directive 89/336/EEC	EN 50081-2, EN 50082-2
Conformity	
Insulation coordination	EN 50178
Electrical isolation	EN 50178
Electromagnetic compatibility	NE 21
Protection degree	IEC 60529
Ambient conditions	
Ambient temperature	-20 ... 60 °C (-4 ... 140 °F)
Mechanical specifications	
Protection degree	IP20
Mass	approx. 100 g
Dimensions	20 x 119 x 115 mm (0.8 x 4.7 x 4.5 in)

Supplementary information

Statement of Conformity, Declaration of Conformity and instructions have to be observed. For information see www.pepperl-fuchs.com.

Accessories

Power Rail PR-03
Power Rail UPR-03
Power feed module KFD2-EB2...

Using Power Rail PR-03 or UPR-03 the devices are supplied with 24 V DC by means of the power feed modules. If no Power Rails are used, power supply of the individual devices is possible directly via their device terminals.

Each power feed module is used for fusing and monitoring groups with up to 100 individual devices. The Power Rail PR-03 is an inset component for the DIN rail. The Power Rail UPR-03 is a complete unit consisting of the electrical inset and an aluminium profile rail 35 mm x 15 mm x 2000 mm. To make electrical contact, the devices are simply engaged.

The Power Rail must not be fed via the device terminals of the individual devices!

Release date 2010-01-04 14:20 Date of issue 2013-04-04 112670_eng.xml