- 1-channel
- Control circuit EEx ia IIC
- Input frequency 1 mHz ... 5 kHz
- Analogue output 0/4 mA ... 20 mA
- Measuring range parameterisable
- 2 relay outputs
- 1 electronic output, isolated
- Each output can be assigned individual parameters, such as a trip value (high/low alarm), serially switched output, pulse divider or error message output
- Startup override
- Restart inhibit
- Lead breakage (LB) monitoring and short-circuit (SC) monitoring
- Bounce filter
- Up to SIL2 acc. to IEC 61508

24 V DC

KFD2-UFC-Ex1.D

Function

The frequency converter converts an input frequency into a frequency-proportional current and offers at the same time the possibility to monitor the trip values.

The frequency value for the minimum (0 mA or 4 mA) and the maximum output current (20 mA) is freely parameterisable.

Also the functions of the switch outputs (2 relay outputs and 1 potential free transistor output) are freely adjustable [trip value display (Min/Max alarm), serially switched output, pulse divider output, error signal output].

A start-up override that can be activated externally is integrated as well. The maximum input frequency is 5 kHz.

The input and output circuits are galvanically isolated.

The frequency converter can be supplied via the Power Rail, which also transfers the collective error message.

The device can be adjusted by means of the control panel or the software.

Connection

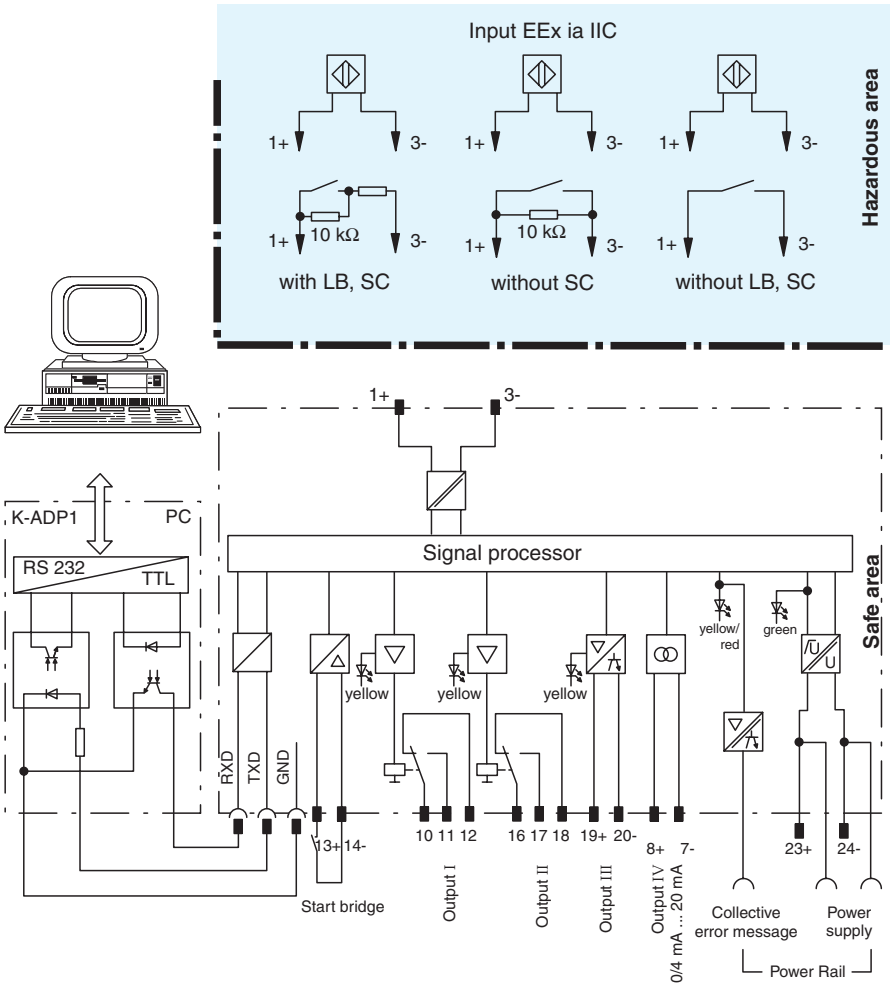

Composition

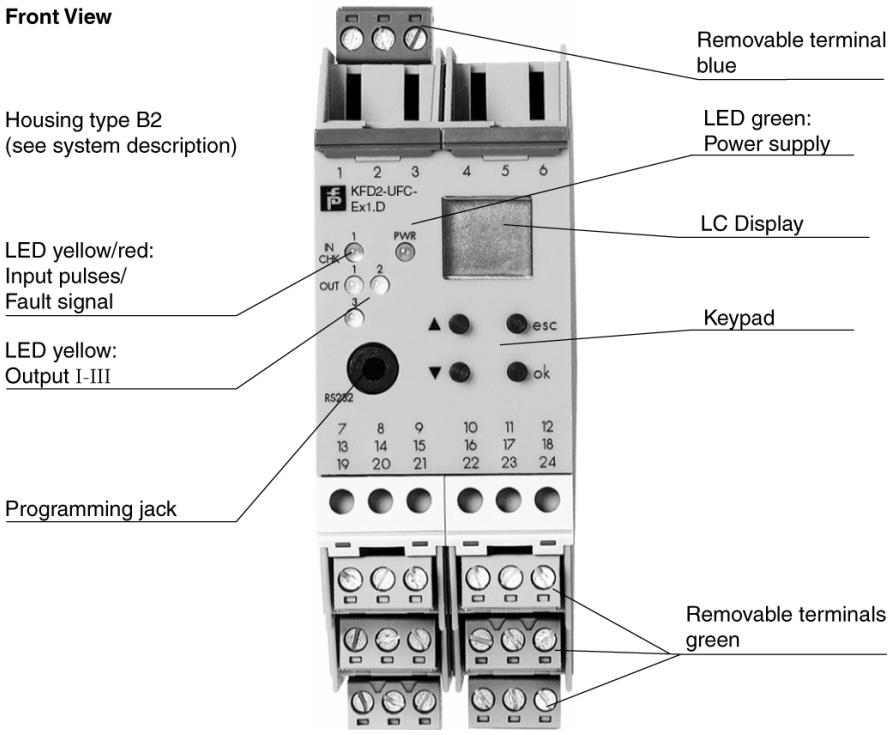

Release date 2009-06-30 15:45 Date of issue 2009-06-30 049535_ENG.xml

Subject to reasonable modifications due to technical advances. Copyright Pepperl+Fuchs, Printed in Germany

Supply	
Connection	terminals 23+, 24- or power feed module/Power Rail
Rated voltage	20 ... 30 V DC
Rated current	approx. 100 mA
Power loss/power consumption	≤ 2 W / 2.2 W
Input	
Connection	input I: intrinsically safe: terminals 1+, 3- Input II: non-intrinsically safe: terminals 13+, 14-
Input I	acc. to EN 60947-5-6 (NAMUR), see system description for electrical data
Pulse duration	> 50 µs
Input frequency	0.001 ... 5000 Hz
Lead monitoring	breakage I ≤ 0.15 mA; short-circuit I > 6.5 mA
Input II	startup override: 1 ... 1000 s, adjustable in steps of 1 s
Active/passive	I > 4 mA (for min. 100 ms) / I < 1.5 mA
Open circuit voltage/short-circuit current	18 V / 5 mA
Output	
Connection	output I: terminals 10, 11, 12; output II: terminals 16, 17, 18; output III: terminals 19+, 20; output IV: terminals 8+, 7-;
Collective error message	Power Rail
Output I, II	signal, relay
Contact loading	250 V AC / 2 A / cos ϕ ≥ 0.7 ; 40 DC / 2 A
Mechanical life	5 x 10^7 switching cycles
Energized/de-energized delay	approx. 20 ms / approx. 20 ms
Output III	electronic output, passive
Contact loading	40 V DC
Signal level	1-signal: (L+) - 2.5 V (50 mA, short-circuit/overload proof) 0-signal: switched off (off-state current ≤ 10 µA)
Output IV	analog
Current range	0 ... 20 mA or 4 ... 20 mA
Open circuit voltage	≤ 24 V DC
Load	≤ 650 Ω
Fault signal	downscale I ≤ 3.6 mA , upscale ≥ 21.5 mA (acc. NAMUR NE43)
Transfer characteristics	
Input I	
Measuring range	0.001 ... 5000 Hz
Resolution	0.1 % of the measurement value , ≥ 0.001 Hz
Accuracy	0.1 % of the measurement value , > 0.001 Hz
Measuring time	< 100 ms
Influence of ambient temperature	0.003 %/°C (30 ppm)
Output I, II	
Response delay	≤ 200 ms
Output IV	
Resolution	< 10 µA
Accuracy	< 20 µA
Influence of ambient temperature	0.005 %/°C (50 ppm)
Electrical isolation	
Output I, II/other circuits	reinforced insulation acc. to IEC 61140, rated insulation voltage 300 V_{rms}
Mutual output I, II, III	reinforced insulation acc. to IEC 61140, rated insulation voltage 300 V_{rms}
Output III, IV/power supply and collective error	reinforced insulation acc. to IEC 61140, rated insulation voltage 300 V_{rms}
Output III/IV/start-up override	functional insulation acc. to EN 50178, rated insulation voltage 300 V_{rms}
Start-up override/power supply and collective error	reinforced insulation acc. to IEC 61140, rated insulation voltage 300 V_{rms}
Interface/power supply	reinforced insulation acc. to IEC 61140, rated insulation voltage 300 V_{rms}
Interface/output III	functional insulation acc. to EN 50178, rated insulation voltage 300 V_{rms}
Directive conformity	
Electromagnetic compatibility	
Directive 89/336/EEC	EN 61326, EN 50081-2, EN 50082-2
Low voltage	
Directive 73/23/EEC	EN 50178
Conformity	
Insulation coordination	EN 50178
Electrical isolation	EN 50178

Release date 2009-06-30 15:45 Date of issue 2009-06-30 049535_ENG.xml

Subject to reasonable modifications due to technical advances. Copyright Pepperl+Fuchs, Printed in Germany

Electromagnetic compatibility	NE 21
Protection degree	IEC 60529
Protection against electric shock	IEC 61140
Input	EN 60947-5-6
Ambient conditions	
Ambient temperature	-20 ... 60 °C (253 ... 333 K)
Mechanical specifications	
Protection degree	IP20
Mass	300 g
Dimensions	40 x 100 x 115 mm (1.6 x 3.9 x 4.5 in)
Data for application in conjunction with hazardous areas	
EC-Type Examination Certificate	TÜV 99 ATEX 1471 , for additional certificates see www.pepperl-fuchs.com
Group, category, type of protection	⟨Ex⟩ II (1)GD [EEx ia] IIC [circuit(s) in zone 0/1/2]
Supply	
Safety maximum voltage U_m	40 V DC (Attention! U_m is no rated voltage.)
Input I	terminals 1+, 3- EEx ia IIC
Voltage U_o	10.1 V
Current I_o	13 mA
Power P_o	34 mW (linear characteristic)
Input II	terminals 13+, 14- non-intrinsically safe
Safety maximum voltageU_m	40 V DC (Attention! U_m is no rated voltage.)
Output I, II	terminals 10, 11, 12; 16, 17, 18 non-intrinsically safe
Safety maximum voltage U_m	253 V AC / 40 V DC (Attention! U_m is no rated voltage.)
Contact loading	253 V AC/2 A/cos ϕ > 0.7; 40 V DC/2 A resistive load (TÜV 99 ATEX 1471) 50 V AC/2 A/cos ϕ > 0.7; 40 V DC/2 A resistive load (TÜV 02 ATEX 1885 X)
Output III	terminals 19+, 20- non-intrinsically safe
Safety maximum voltageU_m U_m	40 V DC (Attention! U_m is no rated voltage.)
Output IV	terminals 8+, 7- non-intrinsically safe
Safety maximum voltage U_m	40 V DC (Attention! U_m is no rated voltage.)
Interface	RS 232
Safety maximum voltage U_m	40 V DC (Attention! U_m is no rated voltage.)
Statement of conformity	TÜV 02 ATEX 1885 X , observe statement of conformity
Group, category, type of protection, temperature classification	⟨Ex⟩ II 3G EEx nAC IIC T4 [device in zone 2]
Electrical isolation	
Input/other circuits	safe electrical isolation acc. to EN 50020, voltage peak value 375 V
Directive conformity	
Directive 94/9/EC	EN 50014, EN 50020, EN 50021

Supplementary information

EC-Type Examination Certificate, Statement of Conformity, Declaration of Conformity and instructions have to be observed. For information see www.pepperl-fuchs.com.

Accessories

Power feed modules KFD2-EB2...

The power feed module is used to supply the devices with 24 V DC via the Power Rail. The fuse-protected power feed module can supply up to 100 individual devices depending on the power consumption of the devices. A galvanically isolated mechanical contact uses the Power Rail to transmit collective error messages.

Power Rail UPR-03

The Power Rail UPR-03 is a complete unit consisting of the electrical inset and an aluminium profile rail 35 mm x 15 mm. To make electrical contact, the devices are simply engaged.

The Power Rail must not be fed via the device terminals of the individual devices!

PACT*ware*™

Device-specific drivers (DTM)

Release date 2009-06-30 15:45 Date of issue 2009-06-30 049535_ENG.xml

Subject to reasonable modifications due to technical advances. Copyright Pepperl+Fuchs, Printed in Germany

Adapter K-ADP1

Programming adapter for parameterisation via the serial RS 232 interface of a PC/Notebook

For programming, please use the new version of adapter K-ADP1 (part no. 181953, connector length 14mm). When using the previous version K-ADP1 (connector length 18 mm) the plug is exposed by approx. 3 mm. The function is not affected.

Adapter K-ADP-USB

Programming adapter for parameterisation via the serial USB interface of a PC/Notebook

Release date 2009-06-30 15:45 Date of issue 2009-06-30 049535_ENG.xml

Subject to reasonable modifications due to technical advances. Copyright Pepperl+Fuchs, Printed in Germany