Features

- 1-channel isolated barrier
- 24 V DC supply (Power Rail)
- Voltage input 0 V ... -20 V
- Vibration sensor inputs
- Voltage/current field supply
- Voltage output 0 V ... -20 V

Function

This isolated barrier is used for intrinsic safety applications. It provides a floating output to power a vibration sensor (e. g., Bently Nevada) or accelerometer in a hazardous area and transfers the voltage signal from that sensor to the safe area.

The device is designed to provide a voltage or current supply to the vibration sensor. Depending on connection the barrier provides 3.6 mA, 5.3 mA, or 8.9 mA supply current for 2-wire sensors, or 18 V at 20 mA for 3-wire sensors.

Assembly

Front view

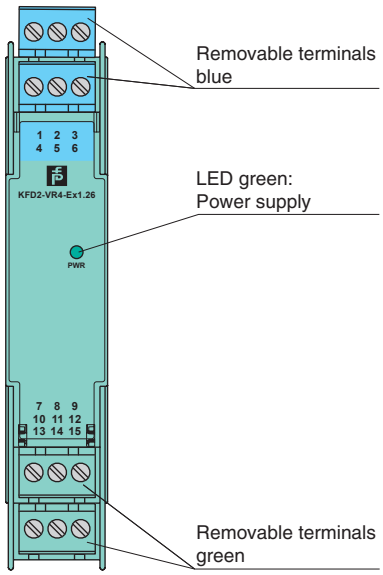

Connection

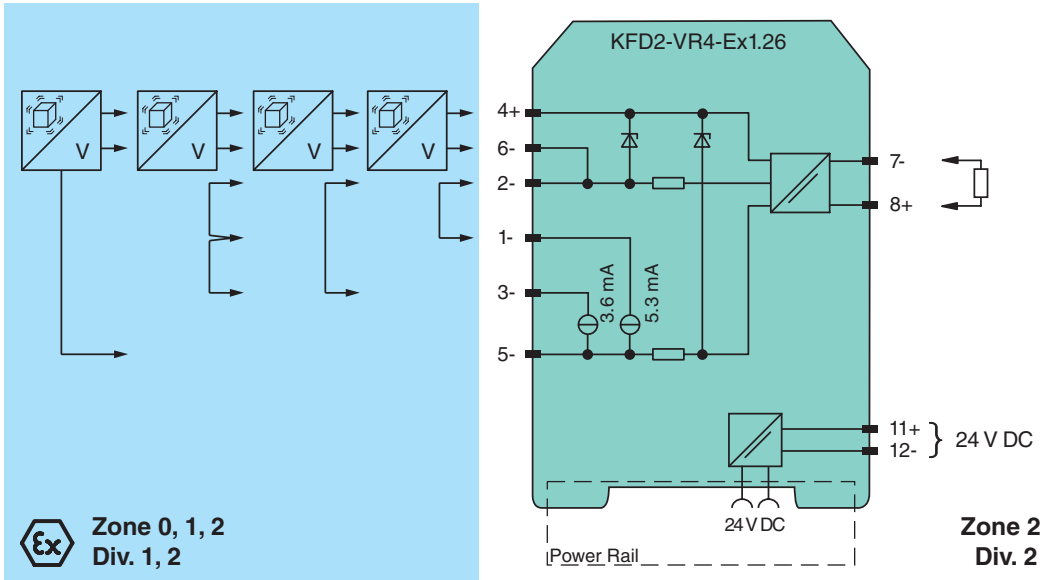

Release date 2011-07-19 14:28 Date of issue 2011-07-19 117144_eng.xml

Subject to reasonable modifications due to technical advances. Copyright Pepperl+Fuchs, Printed in Germany

General specifications		
Signal type		Analog input
Supply		
Connection		Power Rail or terminals 11+, 12-
Rated voltage		20 ... 35 V DC
Ripple		within the supply tolerance
Power loss		≤ 1.2 W
Power consumption		< 1.6 W
Input		
Connection		terminals 4 (common), 1, 3 and 5 (supply -), 2 and 6 (signal -)
Input resistance		10 kΩ terminals 4 (common), 6-/2-
Output rated operating current		terminals 4 (common), 5-: > 10 mA at -21 V or > 20 mA at -18 V terminals 4 (common), 1-: 5.3 mA ±0.53 mA at -10 V terminals 4 (common), 3-: 3.6 mA ±0.7 mA at -10 V
Transmission range		0 ... -20 V
Output		
Connection		terminals 7-, 8+
Load		≥ 2 kΩ
Voltage		0 ... -20 V
Output resistance		approx. 10 Ω Since this is much less than the end-to-end resistance of a zener barrier, it may be necessary to specify a monitor intended for use without a barrier. Please follow the advice of the monitor manufacturer.
Transfer characteristics		
Deviation		DC transfer error (with 10 kΩ load and 10 mA transducer supply current including non-linearity at any point within the span) additional error with AC superimposed is ±5 mV at 20 °C (68 °F) provided that the alternating component of the input voltage is not excessive,i. e. square waves (0 ... 20 kHz) < 5 V pp sine waves (0 ... 20 kHz) the full span of 20 V_{pp} (= 100 g peak acceleration at 100 mV/g) is acceptable.
Influence of ambient temperature		(< 100 ppm of span)/K at any point within the span
Bandwidth		-0.1 dB at 10 kHz; -1 dB at 20 kHz
Time delay relative to input		7.2 ± 0.3 µs
Ripple		in 200 kHz bandwidth < 20 mV_{rms} in 20 kHz bandwidth < 3 mV_{rms}
Electrical isolation		
Output/power supply		functional insulation, rated insulation voltage 50 V AC
Directive conformity		
Electromagnetic compatibility		
Directive 2004/108/EC		EN 61326-1:2006
Conformity		
Electrical isolation		EN 50020
Electromagnetic compatibility		NE 21
Protection degree		IEC 60529
Ambient conditions		
Ambient temperature		-20 ... 60 °C (-4 ... 140 °F)
Mechanical specifications		
Protection degree		IP20
Material		Polycarbonate
Mass		approx. 125 g
Dimensions		20 x 119 x 115 mm (0.8 x 4.7 x 4.5 in) , housing type B2
Data for application in connection with Ex-areas		
EC-Type Examination Certificate		BAS 02 ATEX 7206 , for additional certificates see www.pepperl-fuchs.com
Group, category, type of protection		⟨Ex⟩ II (1)GD, [Ex ia] IIC, [Ex iaD] (-20 °C ≤ T_{amb} ≤ 60 °C) [circuit(s) in zone 0/1/2]
Input		Ex ia IIC
Supply		
Maximum safe voltage	U_m	250 V (Attention! The rated voltage is 35 V.)
Type of protection [EEx ia]		
Connection		all hazardous area terminals
Voltage	U_o	26.4 V
Current	I_o	90 mA
Power	P_o	570 mW
Connection		terminals 4 (common), 1-, 3- and 5-
Voltage	U_o	25.2 V
Current	I_o	90 mA
Power	P_o	570 mW

Release date 2011-07-19 14:28 Date of issue 2011-07-19 117144_eng.xml

Subject to reasonable modifications due to technical advances. Copyright Pepperl+Fuchs, Printed in Germany

EC-Type Examination Certificate	DMT 01 ATEX E 133
Group, category, type of protection	⟨Ex⟩ I (M1) [Ex ia] I
Statement of conformity	TÜV 99 ATEX 1499 X , observe statement of conformity
Group, category, type of protection, temperature classification	⟨Ex⟩ II 3G Ex nA II T4 [device in zone 2]
Electrical isolation	
Input/Output	safe galvanic isolation acc. to EN 50020, voltage peak value 375 V
Input/power supply	safe galvanic isolation acc. to EN 50020, voltage peak value 375 V
Directive conformity	
Directive 94/9/EC	EN 50014, EN 50020, EN 50021, EN 50303, EN 60079-0, EN 60079-15
International approvals	
UL approval	
Control drawing	116-0173 (cULus)
General information	
Supplementary information	EC-Type Examination Certificate, Statement of Conformity, Declaration of Conformity, Attestation of Conformity and instructions have to be observed where applicable. For information see www.pepperl-fuchs.com.

Installation

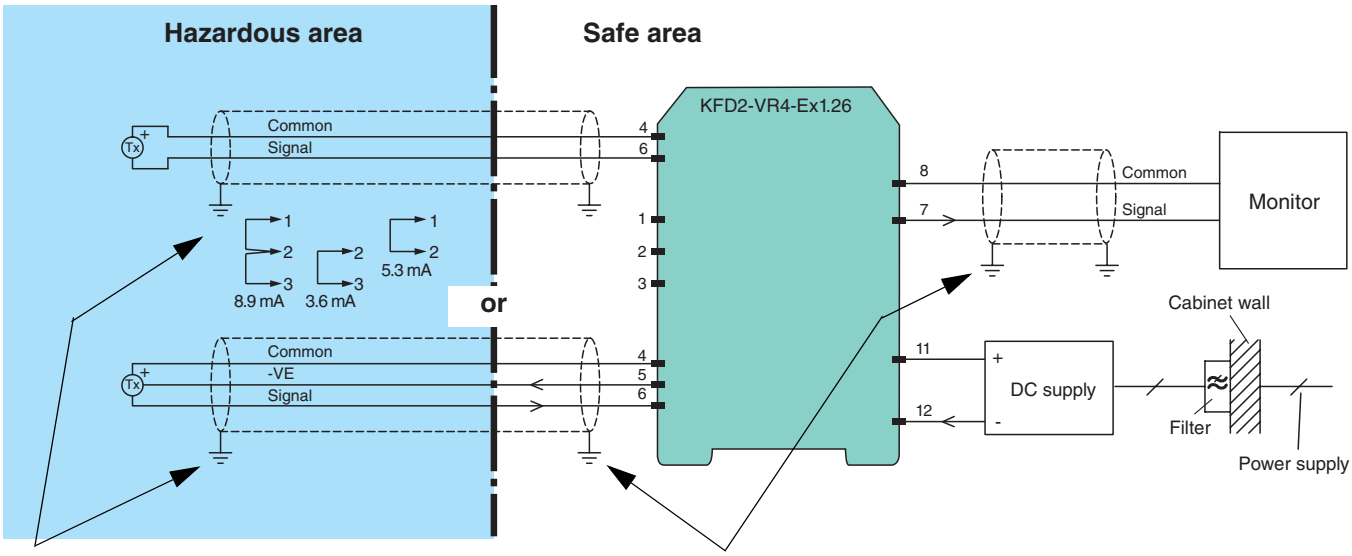

If the transducer and probe are isolated from ground, the cable screen may be left unconnected at this end but must be securely insulated. If the transducer circuitry is connected or decoupled to ground the screen must be securely grounded.

In general, please follow the recommendations of the transducer makers.

Cable screens should normally be grounded in the gland where the cable enters the barrier cabinet. If the cabinet doors are likely to be left open while transceivers are in use nearby, it is permissible to ground the cable screens to the DIN rail on which the barriers are mounted, but note that this may affect the R.F.I. immunity of other apparatus in the cabinet.

Function

Vibration monitoring sensors with 2-wire connection:

2-wire accelerometers and velocity indication devices are supplied with a fixed current and indicate what they are sensing by varying their own supply voltage - often by ±5 V about a quiescent level of about 10 V. Those sensors are connected to terminals 4 and 6 with a link between terminals 2 and 1 (5.3 mA) or terminals 2 and 3 (3.6 mA) or terminals 2 and both 1 and 3 (8.9 mA).

The terminal 5 circuit has 2 constant sources of current connected to it which are brought out on terminals 1 at 5.3 mA and 3 at 3.6 mA. That means that a 1 kΩ resistor, for example, connected between terminals 4 and 1 would have 5.3 mA flowing in it, connected between terminals 4 and 3 would have 3.6 mA flowing in it and connected between terminals 4 and both 1 and 3 would have 8.9 mA flowing in it.

Example:

As an example, a 2-wire accelerometer requiring a minimum of 4 mA supply current and changing its own supply voltage by 100 mV for each "g" that it experiences would be connected between terminals 4 and 6 with a link between terminals 2 and 1. In that condition there may be around 10 V between terminals 4 and 6 under quiescent conditions. If it were capable of indication up to 50 g in each direction then the voltage between terminals 4 and 6 would vary between 5 V (indicating +50 g) and 15 V (indicating -50 g).

Release date 2011-07-19 Date of issue 2011-07-19 117144_eng.xml

Subject to reasonable modifications due to technical advances. Copyright Pepperl+Fuchs, Printed in Germany

Vibration monitoring sensors with 3-wire connection:

Commonly 3-wire analogue proximity sensors are used to indicate shaft position and can "see" movements due to vibration which they indicate as a varying voltage level on the 3rd wire. Those sensors are connected to terminals 4, 5 and 6 with power supplied through terminals 4 and 5 and the signal connected to terminal 6. For a 3-wire sensor taking 10 mA, terminal 5 would be at approximately -21 V with respect to the common terminal 4 and the signal on the 3rd wire, connected to terminal 6, would be able to vary over the 0 to -19 V, or so, with respect to the common.

Terminal 4, the most positive terminal on the field side, is regarded as "common". There is an open circuit voltage of about 24 V DC between terminals 4 and 5 but terminal 5 has a resistance of about 300 Ω in series with it so the voltage falls to about 21 V at 10 mA and about 18 V at 20 mA. DC voltages at terminals 6 and 2 (referred to the "common") are repeated at terminal 7 using terminal 8 as the "common" on the safe side of the unit.

Accessories

Power feed module KFD2-EB2

The power feed module is used to supply the devices with 24 V DC via the Power Rail. The fuse-protected power feed module can supply up to 100 individual devices depending on the power consumption of the devices. A galvanically isolated mechanical contact uses the Power Rail to transmit collective error messages.

Power Rail UPR-03

The Power Rail UPR-03 is a complete unit consisting of the electrical inset and an aluminium profile rail 35 mm x 15 mm. To make electrical contact, the devices are simply engaged.

Profile Rail K-DUCT with Power Rail

The profile rail K-DUCT is an aluminum profile rail with Power Rail insert and two integral cable ducts for system and field cables. Due to this assembly no additional cable guides are necessary.



Attention

Power Rail and Profile Rail must not be fed via the device terminals of the individual devices!

Release date 2011-07-19 14:28 Date of issue 2011-07-19 117144_eng.xml

Subject to reasonable modifications due to technical advances. Copyright Pepperl+Fuchs, Printed in Germany