- 1-channel
- Input frequency 1 mHz ... 12 kHz
- 2 relay outputs
- Each output individually parameterisable as trip value
- Start-up override
- Restart inhibit
- Lead breakage (LB) monitoring and short-circuit (SC) monitoring
- Bounce filter
- Parameterisation via control panel
- Up to SIL2 acc. to IEC 61508

48 V AC ... 253 V AC/20 V DC ... 90 V DC

KFU8-DWB-1.D

Function

The speed monitor KFU8-DWB-1.D is able to survey the trip values.

The switch points of the two relays can be set freely (MIN/MAX alarm). A start-up override that can be activated externally is integrated as well. In order to detect short-time interferences or trip value exceeding a restart inhibit can be activated. The maximum input frequency is 12 kHz.

The input and output circuits are galvanically isolated.

Connection

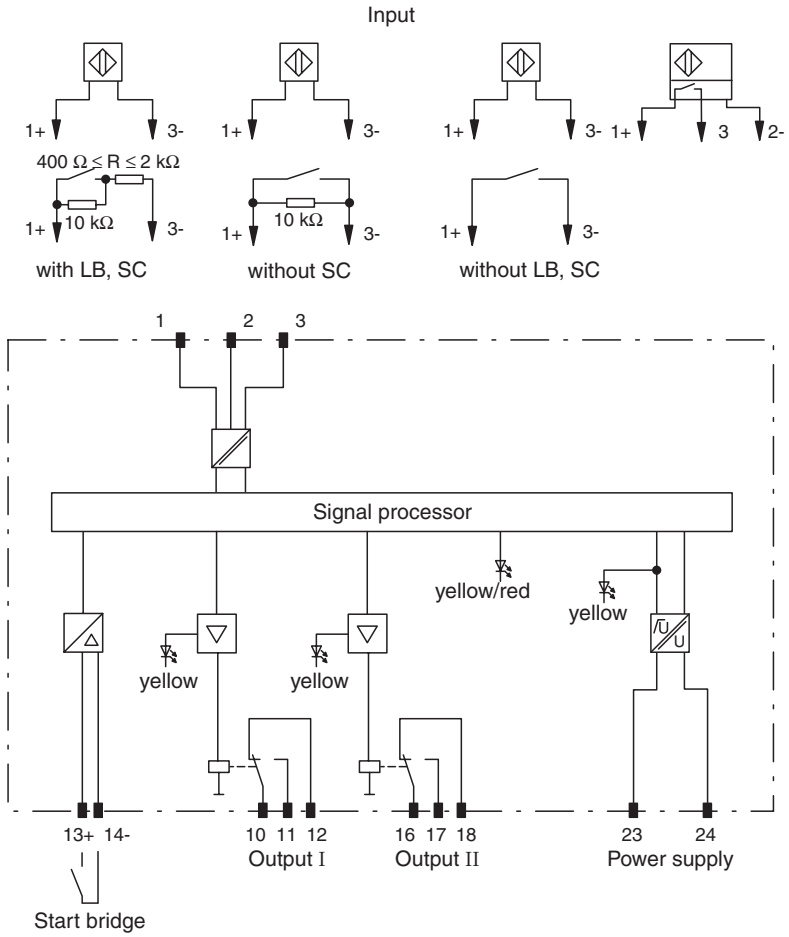

Composition

Front View

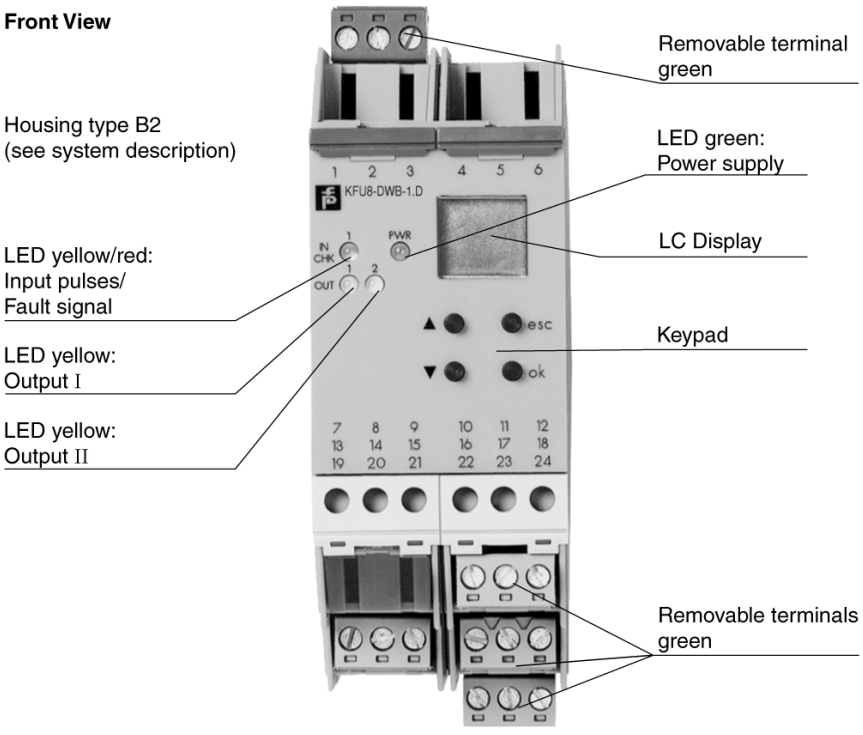

Release date 2005-12-05 14:49 Date of issue 2005-12-05 114222_ENG.xml

Subject to reasonable modifications due to technical advances. Copyright Pepperl+Fuchs, Printed in Germany

Supply	
Connection	terminals 23, 24
Rated voltage	20 ... 90 V DC / 48 ... 253 V AC
Rated current	approx. 100 mA
Power loss/Power consumption	≤ 1.8 W ; 2 VA / 1.8 W ; 2 VA
Input	
Connection	2-wire sensor: terminals 1+, 3- three wire sensor: terminals 1+, 2- and 3 (signal) start-up override: terminals 13+, 14-
Lead monitoring	breakage I ≤ 0.15 mA; short-circuit I > 6.5 mA
Input I	sensor
Input resistance	4.7 kΩ
Open-circuit voltage/short-circuit current	22 V / 40 mA
Switching point/Switching hysteresis	logic 1: > 2.5 mA ; logic 0: < 1.9 mA
Pulse duration	> 50 µs
Input frequency	0.001 ... 12000 Hz
Lead monitoring	breakage I ≤ 0.15 mA; short-circuit I > 4 mA
Input II	start-up override: 1 ... 1000 s, adjustable in steps of 1 s
Active/passive	I > 4 mA (for min. 100 ms) / I < 1.5 mA
Open-circuit voltage/short-circuit current	18 V / 5 mA
Output	
Connection	output I: terminals 10, 11, 12 output II: terminals 16, 17, 18
Output I and II	signal, relay
Contact loading	250 V AC / 2 A / cos φ ≥ 0.7 ; 40 V DC / 2 A
Mechanical life	5 x 10^7 switching cycles
Energized/de-energized delay	approx. 20 ms / approx. 20 ms
Transfer characteristics	
Input I	
Measurement range	0.001 ... 12000 Hz
Resolution	0.1 % of measured value , ≥ 0.001 Hz
Accuracy	0.1 % of measured value , > 0,001 Hz
Measuring time	< 100 ms
Influence of ambient temperature	0.003 %/°C (30 ppm)
Output I and II	
Response delay	≤ 200 ms
Electrical isolation	
Input/other circuits	safe electrical isolation acc. to EN 50020, voltage peak value 375 V
Output I, II against eachother	reinforced insulation acc. to IEC 61140, rated insulation voltage 300 V_{eff}
Output I, II/other circuits	reinforced insulation acc. to IEC 61140, rated insulation voltage 300 V_{eff}
Start-up override/power supply	reinforced insulation acc. to IEC 61140, rated insulation voltage 300 V_{eff}
Directive conformity	
Electromagnetic compatibility	
Directive 89/336/EC	EN 61326, EN 50081-2
Low voltage	
Directive 73/23/EEC	EN 50178
Conformity	
Electrical isolation	EN 50178
Electromagnetic compatibility	NE 21
Protection degree	IEC 60529
Protection against electric shock	IEC 61140
Ambient conditions	
Ambient temperature	-20 ... 60 °C (253 ... 333 K)
Mechanical specifications	
Protection degree	IP20
Mass	300 g
Dimensions	40 x 100 x 115 mm (1.6 x 3.9 x 4.5 in)

Supplementary information

Statement of Conformity, Declaration of Conformity and instructions have to be observed. For information see www.pepperl-fuchs.com.

Release date 2005-12-05 14:49 Date of issue 2005-12-05 114222_ENG.xml

Subject to reasonable modifications due to technical advances. Copyright Pepperl+Fuchs, Printed in Germany